SIEMENS

7696

ISO 9001

VALVEGYR®

Gas Valve Proving System LDU11...

Series ...A...

The LDU11... control unit is designed for gas valve proving in gas-fired combustion plant equipped with 2 safety shutoff valves.
During each startup cycle, the control unit automatically programs the valve proving test and, in the event of leakage, prevents the burner from starting up.

The LDU11... and this Data Sheet are intended for use by OEMs which integrate the gas valve proving system in their products.

Use

The LDU11... control unit is designed for automatic gas valve proving (leakage test) based on the pressure proving principle.
It is for use in gas-fired combustion plant with or without vent pipe to atmosphere.
In the case of plants with no vent pipe where EN standards apply, the notes given in «Connection examples without vent pipe to atmosphere» must be observed.

Used in connection with one or two commercially available pressure switches, gas valve proving is automatically initiated with every burner startup, either
- prior to burner startup
- during the prepurge time if it lasts a minimum of 60 seconds
- immediately after the controlled shutdown, or
- on completion of the burner control's control program, e.g. at the end of the post-purge time

The valve proving test is based on the 2-stage pressure proving principle:
1. First test phase: the valve on the mains side is tested by evacuating the test space and by monitoring the atmospheric pressure in it.
2. Second test phase: the valve on the burner side is checked by pressurizing the test space and by monitoring the gas pressure.

If the pressure increases excessively during the first test phase «Test1», or decreases excessively during the second test phase «Test2», the control unit will inhibit burner startup and initiate lockout.
In that case, the lockout reset button will light up to indicate the fault. Remote indication of the fault is also possible. A program indicator, which stops whenever a fault occurs, indicates which of the valves is leaking.

The control unit can be reset either on the unit itself or via an electric remote resetting facility.

Warning notes

To avoid injury to persons, damage to property or the environment, the following warning notes should be observed.

Do not open, interfere with or modify the unit.

- Before performing any wiring changes in the connection area of the LDU11..., completely isolate the unit from the mains supply (all-polar disconnection)
- Ensure protection against electric shock hazard by providing adequate protection for the control unit's terminals
- Check wiring and all safety functions
- Fall or shock can adversely affect the safety functions. Do not put such units into operation, even if they do not exhibit any damage

Mounting notes

- Observe the relevant national safety regulations

Installation notes

- Installation, commissioning and maintenance work must be carried out by qualified staff
- Always run ignition cables separate from the unit and other cables while observing the greatest possible distances

Commissioning notes

Commissioning and maintenance work must be carried out by qualified staff.

Disposal notes

The unit contains electric and electronic components and may not be disposed of together with household garbage.
Local and currently valid legislation must be observed.

Mechanical design

The control unit is of plug-in design. Housing and plug-in base are made of impact-proof and heat-resistant plastic.

The housing contains:
- The synchronous motor of the sequence switch with its geartrain and step action sequence switch
- The camshaft with its 15 nonadjustable cams
- The program indicator at the head of the camshaft
- One main and one auxiliary relay
- The lockout relay which can be electrically reset from a remote location and which provides the «Lockout» and «Reset» functions
- The unit fuse and a spare fuse

All electrical components are interconnected via printed circuits.

The plug-in base carries the following terminals:
- 24 connection terminals
- 2 auxiliary terminals («31» and «32»)
- 3 earth terminals
- 3 neutral terminals, prewired to terminal 2 (neutral input)

The following knockout holes are available for cable entry:
- 14 knockout holes for cable entry by means of cable glands, 8 at the side and 6 at the bottom of the base
- 6 threaded knockout holes at the side for cable entry glands Pg11 or M16

Plug-in base and terminals are designed such that erroneous plugging in of a unit with the same housing, which is not suited for use with the relevant burner, is made impossible. Visible in the transparent lockout reset button, the program indicator informs service staff about the program sequence, the type of fault and the point in time the fault occurred, using easy-to-remember symbols.

Ordering

Control unit for gas valve proving, without plug-in base	
- For AC 220...240 V, 50…60 Hz	**LDU11.323A27**
- For AC 100...110 V, 60…60 Hz	**LDU11.323A17**
- For AC 220...240 V, 50...60 Hz	**LDU11.523A27**
- For AC 100...110 V, 50...60 Hz	**LDU11.523A17**

Plug-in base	**AGM11**

Technical data

General unit data

Mains voltage	
- LDU11.323A27	AC 220 V –15 %...AC 240 V +10 %
- LDU11.323A17	AC 100 V –15 %...AC 110 V +10 %
- LDU11.523A27	AC 220 V –15 %...AC 240 V +10 %
- LDU11.523A17	AC 100 V –15 %...AC 110 V +10 %
Mains frequency	50...60 Hz ±6 %
Power consumption	
- During the test	3.5 VA
- During operation	2.5 VA
Primary fuse (external)	T10 / 500V
Unit fuse	T6.3H250V to IEC 127
Perm. input current at terminal 1	5 A continuously to VDE 0660 AC3
Perm. current rating of control terminals	4 A to VDE 0660 AC3
Required switching capacity of pressure switch «DW»	min. 1 A, AC 250 V
Mounting orientation	optional
Degree of protection	IP 40
Weight	
- LDU11...	approx. 1000 g
- Plug-in base	approx. 165 g

Environmental conditions

Transport	IEC 721-3-2
Climatic conditions	class 2K2
Mechanical conditions	class 2M2
Temperature range	-50...+60 °C
Humidity	< 95 % r.h.
Operation	IEC 721-3-3
Climatic conditions	class 3K5
Mechanical conditions	class 3M2
Temperature range	-20...+60 °C
Humidity	< 95 % r.h.

⚠ **Condensation, formation of ice and ingress of water are not permitted!**

CE conformity	
According to the directives of the European Union	
Electromagnetic compatibility EMC	89 / 336 EEC incl. 92 / 31 EEC
Directive for gas appliances	90 / 396 EEC

During the first phase of the valve proving test, called «Test1», atmospheric pressure must exist in the length of pipe between the 2 valves to be tested.
In plants with a vent pipe to atmosphere, atmospheric pressure is available if the valve proving test is made prior to or during the prepurge time.
In plants without vent pipe, atmospheric pressure is made available as the control unit opens the valve on the burner side during the time «t4».
If the valve proving test is performed after burner operation, the valve on the burner side after the controlled shutdown can be kept open until «t4» has elapsed, thus reducing the pressure in the test space and making certain its gas content is burnt off in the combustion chamber during the postpurge time.
Prerequisite for this procedure is a suitable control program of the burner control as provided by Landis & Staefa burner controls LFE..., LFL..., LGK... or LEC...

The test space is closed off after it has been evacuated. During the first test phase «Test1», which then follows, the control unit checks with the pressure switch if the atmospheric pressure in the test space is maintained.
If the valve on the mains side is leaking, causing the pressure to rise above the switching point of the pressure switch, the control unit will trigger an alarm and initiate lockout. The program indicator then stops to indicate «Test1».

If the pressure does not increase because the valve closes correctly, the control unit continues its program with the second test phase «Test2».
For that purpose, the valve on the mains side is opened during «t3» so that the test space is pressurized («filling» the test space).
During the second test phase – if the valve on the burner side is leaking – this pressure may not fall below the switching point of the pressure switch. If it does, the control unit will initiate lockout also, thus preventing the burner from starting up.

On successful completion of the second test phase, the control unit closes the internal control loop between terminals 3 and 6 (circuit path: terminal 3 – contact «ar2» - terminals 4 and 5 – contact III – terminal 6).
This control loop is normally included in the start control loop of the burner control.

After the control loop has been closed, the programming mechanism of the control unit returns to its start position to switch itself off.
During these so-called idle steps, the positions of the programming mechanism's control contacts remain unchanged.

Program and lockout indicator

In the event of lockout, the programming mechanism stops and thus the position indicator fitted to the spindle of the mechanism.
The symbol that stops above the reading mark indicates the test phase during which lockout occurred and also gives the number of programming steps completed from the start of this test phase (1 step = 2.5 seconds).

Meaning of the symbols

▶ Start position = operating position

▭ In plants without vent valve:
evacuation of test space by opening the valve on the burner side

Test1 «Test1» with atmospheric pressure (valve proving test on the mains side)

▬ Filling the test space by opening the valve on the mains side

Test2 «Test2» with gas pressure (valve proving test on the burner side)

I I I Idle steps until programming mechanism switches itself off

▶ Operating position = start position for the next valve proving test

In the event of lockout, all terminals receiving voltage from the control unit will be deenergized, except terminal 13, which is used for lockout indication.

After a reset, the programming mechanism automatically returns to its start position to immediately program a new valve proving test.

Note

Do not press the reset button for more than 10 seconds.

Control program after a power failure

A power failure prior to evacuating the test space does not cause the program sequence to change.

If a power failure occurs after the evacuation, the valve proving test will not be continued when power is restored, but the programming mechanism first returns to its start position and then performs the complete valve proving test.

Calculating the leakage rate escaping from a length of pipe

$$Q_{Leck} = \frac{(P_G - P_W) \times V \times 3600}{P_{atm} \times t_{Test}}$$

Legend

Q_{leck}	in dm³ / h	Permissible leakage rate in dm³ or liters per hour
P_G	in mbar	Overpressure in pipe section between the valves to be tested, at the beginning of the test phase
P_W	in mbar	Overpressure set on pressure switch «DW» (normally set to 50 % of the gas mains pressure)
P_{atm}	in mbar	Absolute pressure (1013 mbar normal pressure)
V	in dm³	Volume of test space confined by the valves to be tested, including the space in the valves themselves
T_{test}	in s	Duration of proving time

Example

P_G	= 30 mbar	$Q_{Leck} = \frac{(30-15) \times 10.36 \times 3600}{1013 \times 27.5} = 20$ l/h
P_W	= 15 mbar	
P_{atm}	= 1013 mbar	Any valve leakage rate exceeding 20 l/h causes the control unit to initiate lockout
V	= 10.36 dm³	
t_{Test}	= 27.5 s	

Note

Select volume of pipe section «V» between the gas valves to be checked and overpressure «P_W» set on pressure switch «DW» such that the maximum permissible gas leakage rate «Q_{Leck}» will not exceed the rate specified in the local regulations.

Connection diagram

Legend

AL Alarm signal for «leaking valve»
AR Main relay with contacts «ar...»
AS Unit fuse (built-in)
BR Lockout relay with contacts «br...»
DW Pressure switch for valve proving test (does not replace the gas pressure switch used to signal lack of gas)
EK1 Lockout reset button
EK2 Remote lockout reset button
GP Gas pressure switch (for lack of gas)
HR Auxiliary relay with contacts «hr...»
L1 Lockout warning lamp (built-in)
SK Control contact (for initiating the valve proving test)
SM Synchronous motor of programming mechanism

1) Do not press «EK...» for more than 10 seconds

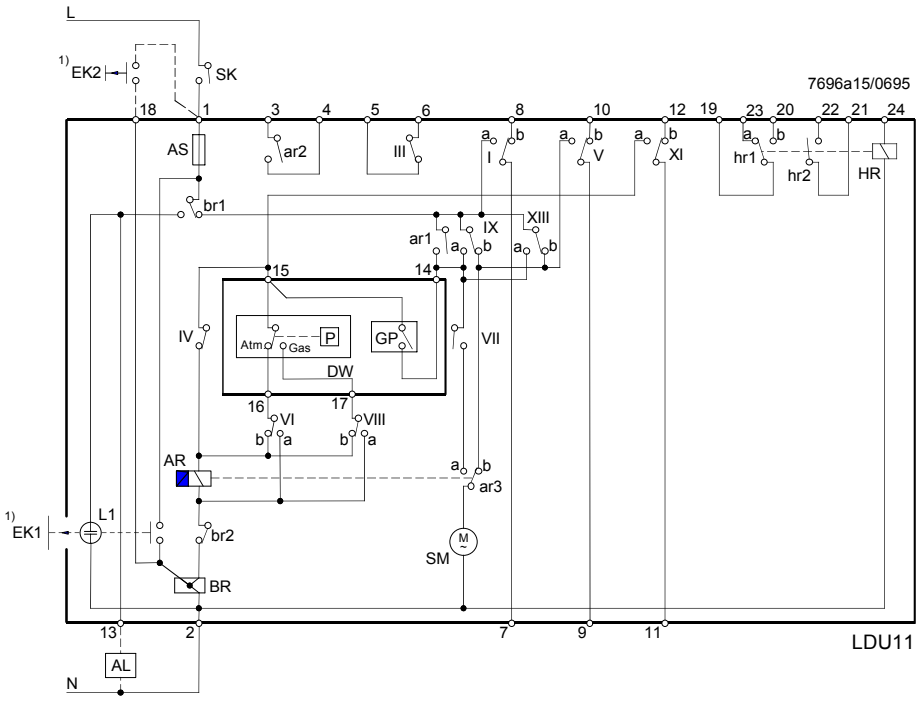

Sequence diagram

Legend

t1	22.5 s	First test phase with atmospheric pressure
t2	27.5 s	Second test phase with gas pressure
t3	5 s	Filling the test space
	2.5 s	with LDU11.323…
	5 s	with LDU11.523
t4	5 s	Evacuating the test space
	2.5 s	with LDU11.323…
	5 s	with LDU11.523
t5	67.5 s	Total duration of valve proving test until burner is enabled
t6	7.5 s	Interval from start to energizing main relay «AR»
t20	22.5 s	Running time of programming mechanism until it switches itself off in the operating = start position (idle steps)

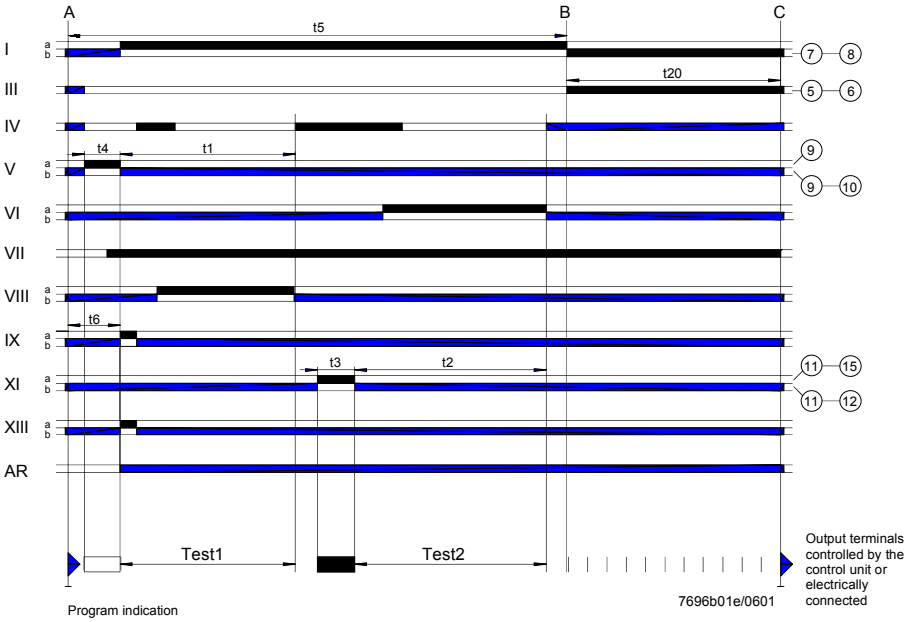

A Gas valves controlled to evacuate the test space
B Gas valves controlled to fill the test space
C Vent valve, normally open; closed during valve proving test from the beginning of «Test1»

Connection examples with vent pipe to atmosphere using burner controls LMG2…, LGB2... , LGB3... or LGB4...

For other connections, refer to the connection diagram of the relevant burner control.

Valve proving test prior to burner startup

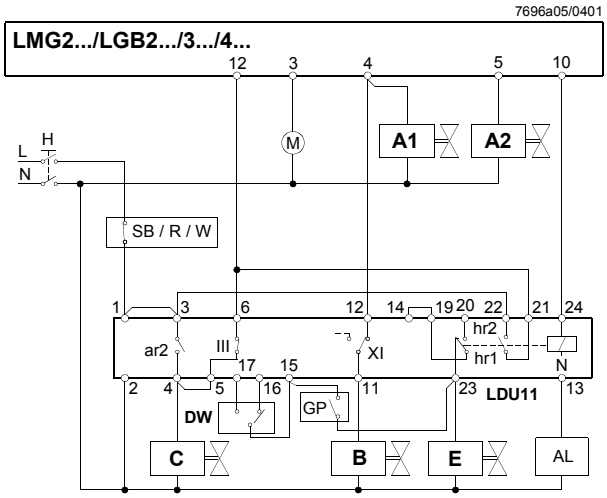

Valve proving test following immediately the controlled shutdown

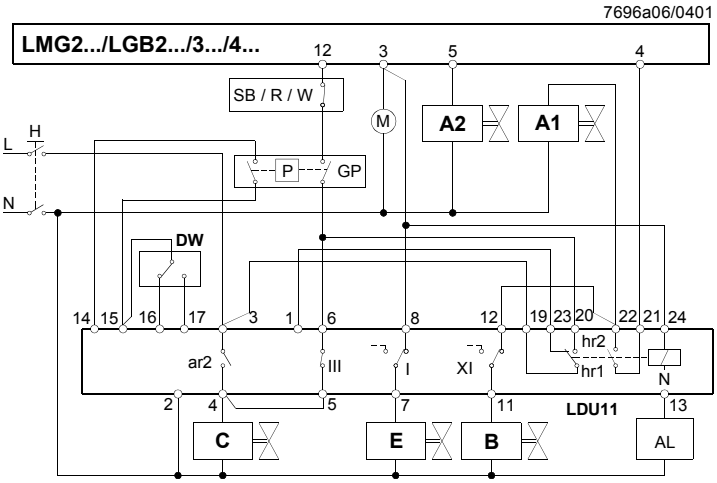

Plants with vent pipe to atmosphere

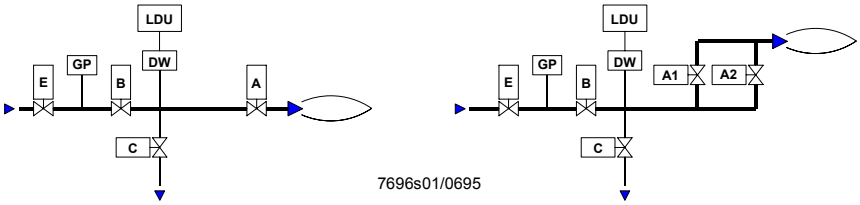

Connection examples with vent pipe to atmosphere using burner controls LFE..., LFL... or LGK..., or the control unit LEC...

Valve proving test during the prepurge time (min. 60 s) and following immediately the controlled shutdown in plants with vent pipe to atmosphere.
Delay on make of relay d > 2 s.
2) Expanding flame burner or interrupted pilot burner

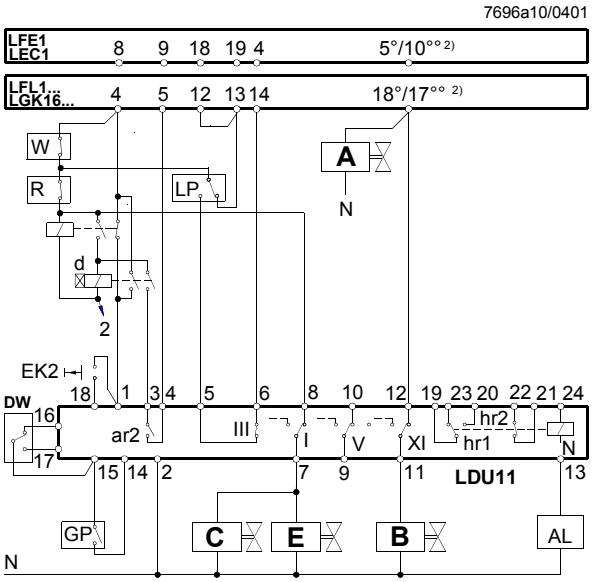

Valve proving test following immediately the controlled shutdown

2) Expanding flame burner or interrupted pilot burner

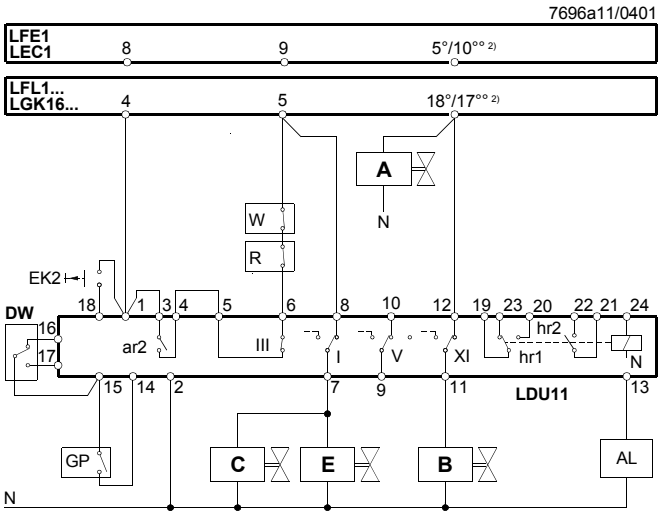

Connection examples with vent pipe to atmosphere using burner controls LFE..., LFL... or LGK..., or the control unit LEC...

For other connections, refer to the connection diagram of the relevant burner control.

Valve proving test just prior to burner startup
2) Expanding flame burner or interrupted pilot burner

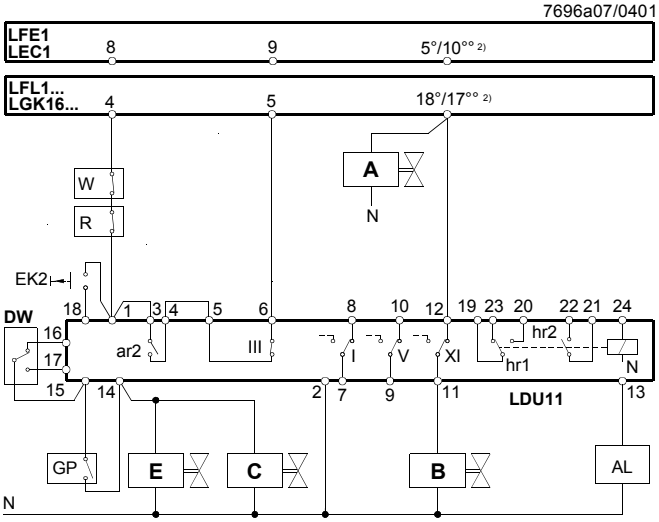

Valve proving test during the prepurge time (min. 60 s)
2) Expanding flame burner or interrupted pilot burner

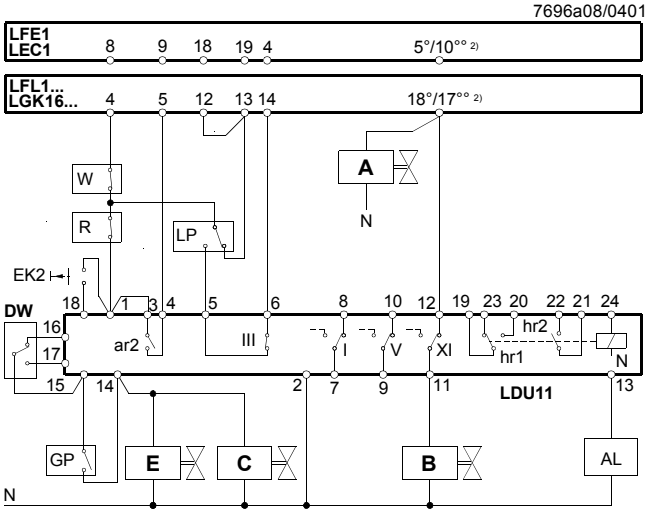

Valve proving test with 2 pressure switches

DWG Pressure switch for the valve proving test with gas pressure.
This pressure switch must be set to the minimum gas pressure permitted during the proving test.
If this pressure is not reached during the test, the control unit will initiate lockout.

DWA Pressure switch for the gas valve proving test with atmospheric pressure.
This pressure switch must be set to the maximum gas pressure permitted during the proving test with atmospheric pressure.
If this pressure is exceeded during the test, the control unit will initiate lockout.

DWG and DWA must be overload-proof up to the gas pressure level.

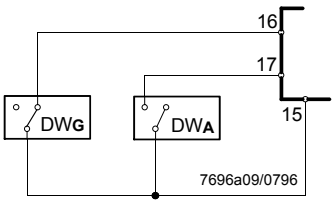

Plants with vent pipe to atmosphere

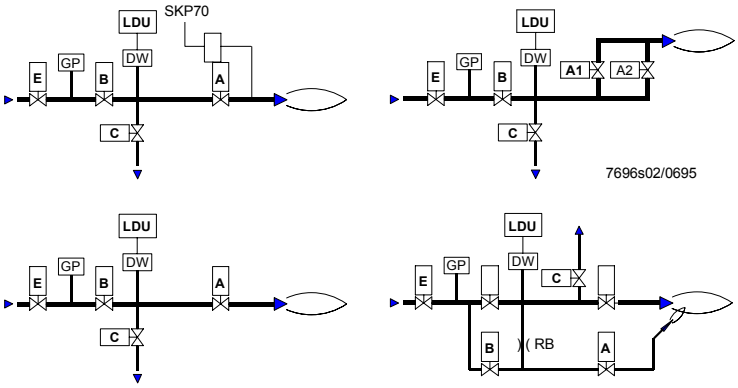

Connection examples without vent pipe to atmosphere (for applications not covered by EN 676) using burner controls LFE..., LFL... or LGK..., or the control unit LEC...

Valve proving test following immediately the controlled shutdown in plants without vent pipe.
Valve «A» or «A1» remains open after the controlled shutdown until the start of the first test phase is reached in order to evacuate the test space and to burn off the gas in the combustion chamber during the afterburn time.
2) Expanding flame burner or interrupted pilot burner

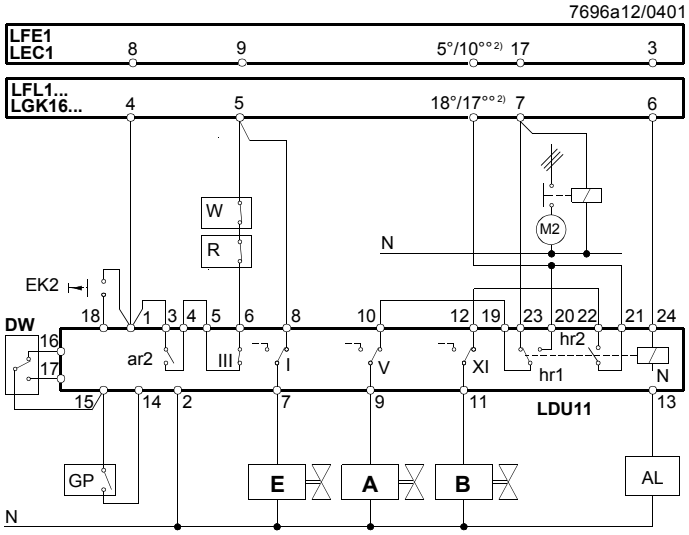

Valve proving test with 2 pressure switches

DWG Pressure switch for the valve proving test with gas pressure.
This pressure switch must be set to the minimum gas pressure permitted during the proving test.
If this pressure is not reached during the test, the control unit will initiate lockout.

DWA Pressure switch for the gas valve proving test with atmospheric pressure.
This pressure switch must be set to the maximum gas pressure permitted during the proving test with atmospheric pressure.
If this pressure is exceeded during the test, the control unit will initiate lockout.

DWG and DWA must be overload-proof up to the gas pressure level.

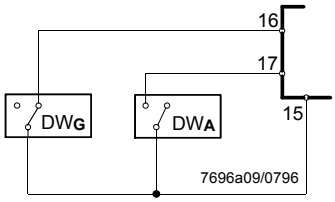

Plants without vent pipe to atmosphere

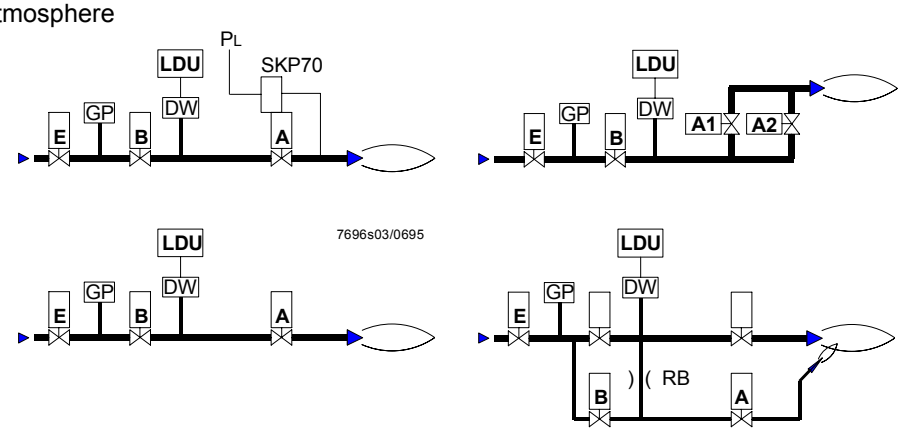

Connection examples without vent pipe to atmosphere using burner controls LMG2..., LGB2... , LGB3... or LGB4...

For other connections, refer to the connection diagram of the relevant burner control.

Valve proving test prior to burner startup

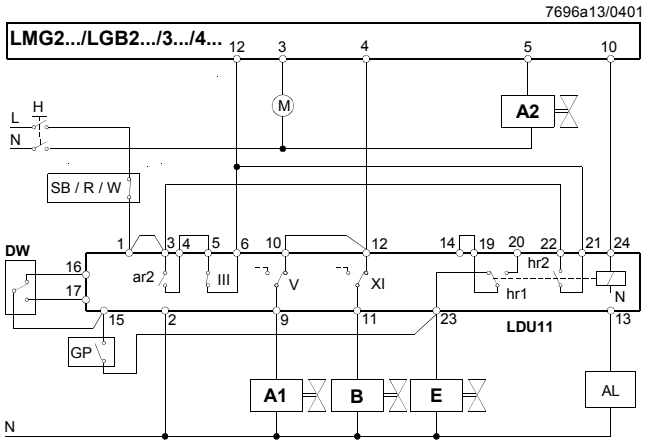

Valve proving test following immediately the controlled shutdown

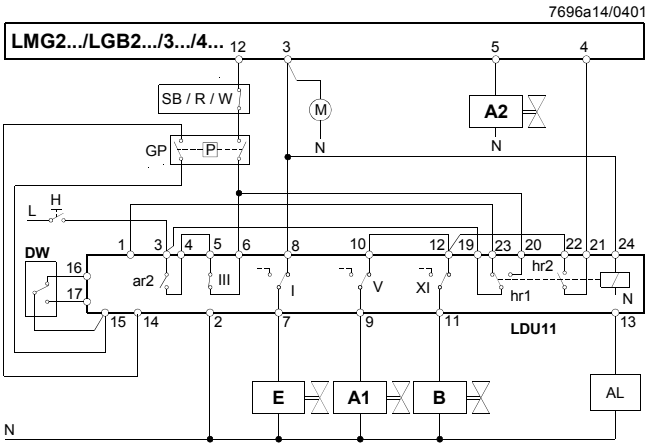

Plants without vent pipe to atmosphere

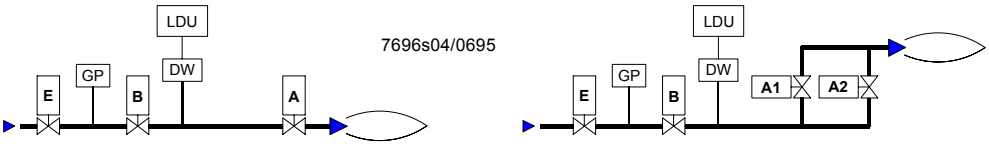

Legend

A, A1, A2	Gas valves controlled to evacuate the test space
AL	Alarm signal for «Leaking valve»
B	Gas valve controlled to fill the test space
C	Vent valve, normally open; closed during valve proving test from the beginning of «Test1»
DW	Pressure switch for valve proving test (does not replace the gas pressure switch used to signal lack of gas)
E	Safety shutoff valve, normally closed (optional)
EK2	Remote lockout reset button
GP	Gas pressure switch (for lack of gas)
H	Main switch
LP	Air pressure switch
M...	Fan («M2»: pre- and postpurging)
PL	Reference pressure for SKP70...
R	Control thermostat or pressurestat (e.g. boiler control thermostat)
RB	Pipe orifice; its diameter must be determined such that in the event of a leaking pilot gas valve «A», the pilot flame cannot afterburn on completion of the second safety time so that presence of the main flame cannot be simulated
SB	Safety limit thermostat
T	Delay off time relay; the time should be set to approx. «t16» (min. «t7»... max. «t10») of the burner control
W	Limit thermostat or pressure switch or pressure limiter

Connection examples without vent pipe to atmosphere using burner controls LFE..., LFL... or LGK..., or the control unit LEC...

For other connections, refer to the connection diagram of the relevant burner control.

Valve proving test just prior to burner startup
2) Expanding flame burner or interrupted pilot burner

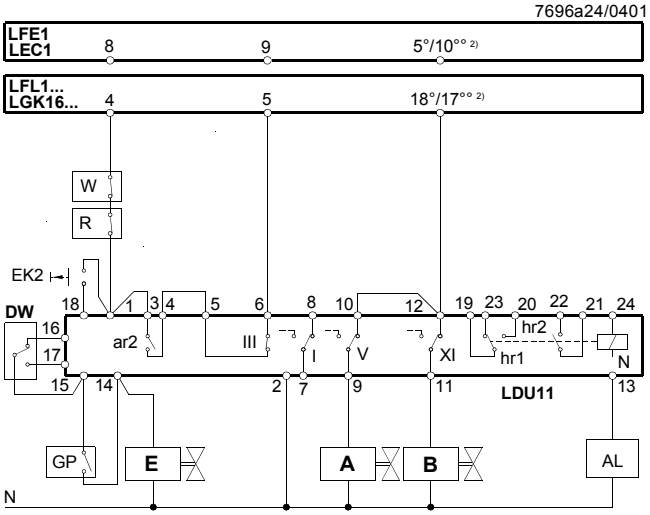

Valve proving test during the prepurge time (min. 60 s)
2) Expanding flame burner or interrupted pilot burner

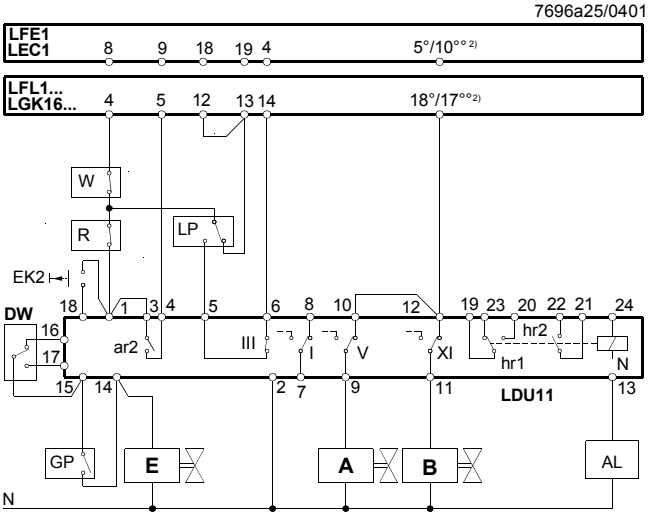

Valve proving test with 2 pressure switches

DWG Pressure switch for the valve proving test with gas pressure.
This pressure switch must be set to the minimum gas pressure permitted during the proving test.
If this pressure is not reached during the test, the control unit will initiate lockout.

DWA Pressure switch for the gas valve proving test with atmospheric pressure.
This pressure switch must be set to the maximum gas pressure permitted during the proving test with atmospheric pressure.
If this pressure is exceeded during the test, the control unit will initiate lockout.

DWG and DWA must be overload-proof up to the gas pressure level.

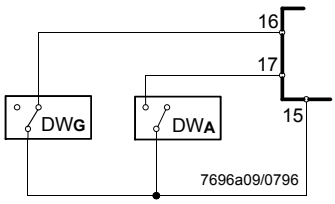

Plants without vent pipe to atmosphere

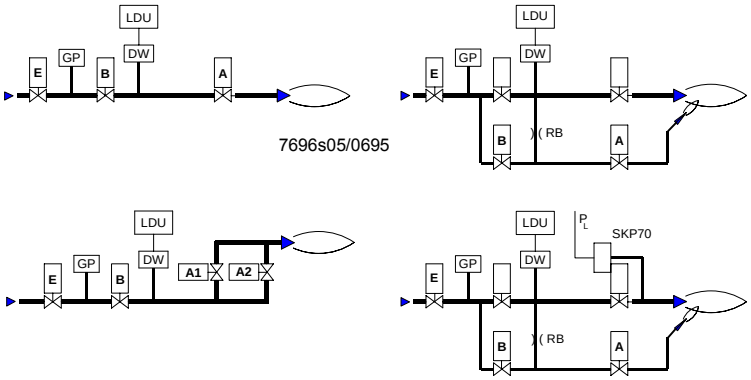

Connection examples without vent pipe to atmosphere using burner controls LFE..., LFL... or LGK..., or control unit LEC... and the SKP70... with expanding flame burners

For other connections, refer to the connection diagram of the relevant burner control

.

Valve proving test just prior to burner startup

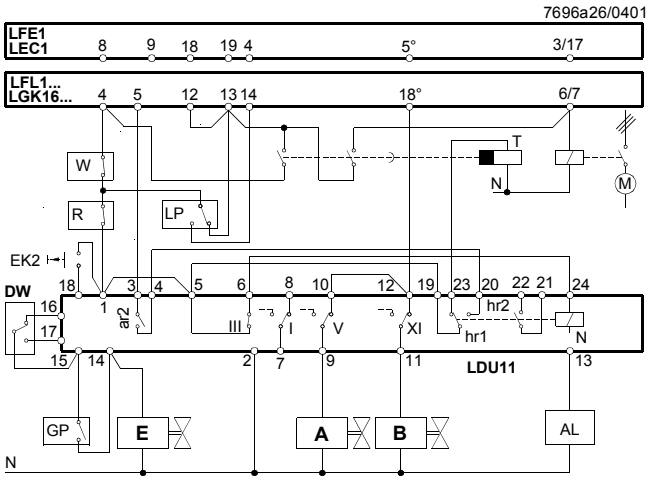

Valve proving test during the prepurge time (min. 60 s)

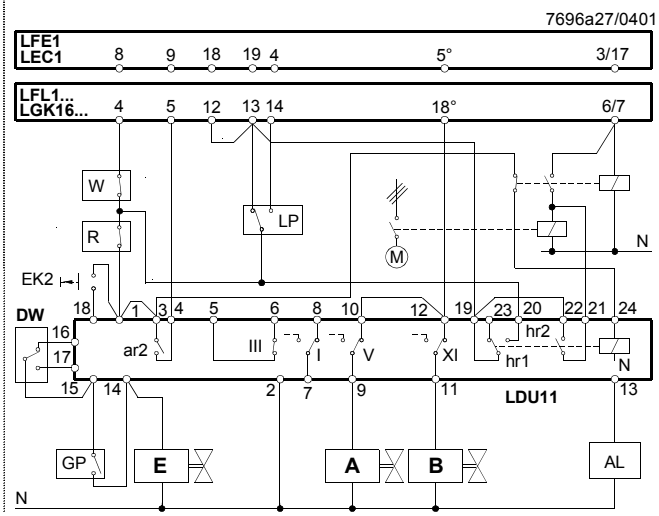

Valve proving test with 2 pressure switches

DWG Pressure switch for the valve proving test with gas pressure.
This pressure switch must be set to the minimum gas pressure permitted during the proving test.
If this pressure is not reached during the test, the control unit will initiate lockout.

DWA Pressure switch for the gas valve proving test with atmospheric pressure.
This pressure switch must be set to the maximum gas pressure permitted during the proving test with atmospheric pressure.
If this pressure is exceeded during the test, the control unit will initiate lockout.

DWG and DWA must be overload-proof up to the gas pressure level.

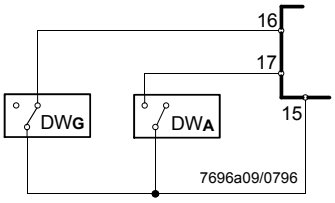

Air pressure «PL» for the SKP... must be sufficiently high to open the SKP70... although the burner's air damper is closed.
Otherwise, the LDU11... will initiate lockout when performing «Test1».

Plants without vent pipe to atmosphere

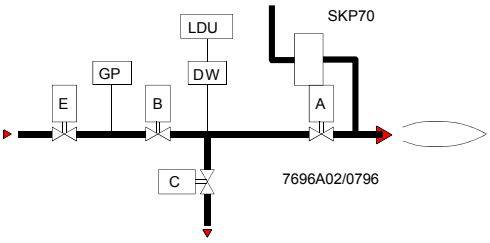

Dimensions in mm

LDU11... with plug-in base AGM11...

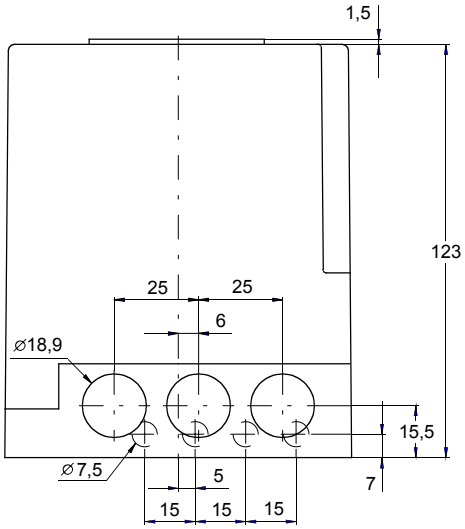

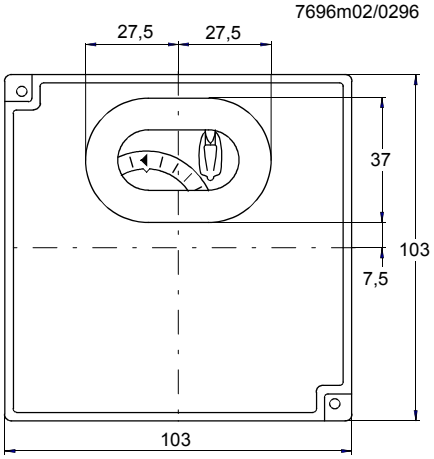

AGM11

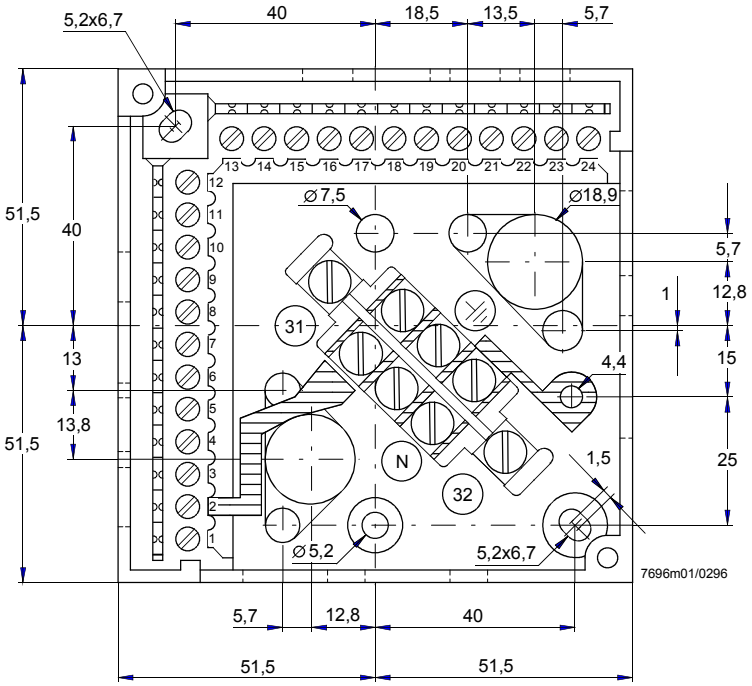

©2001 Siemens Building Technologies AG
Subject to change