SIEMENS

Technical Instructions

Document No. 155-517P25

February 22, 2006

SQM5…

Reversing Actuators

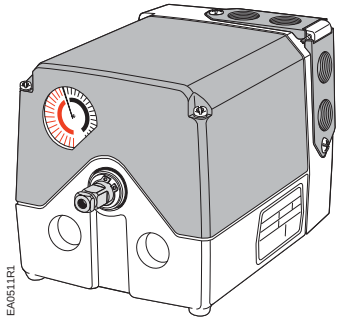

ISO 9000 and 14000
REGISTERED FIRM

Description

SQM5... reversing actuators are used for the positioning of flow control valves, butterfly valves, dampers, or any application requiring rotary motion. The SQM5… actuators accommodate control input signals of 4 to 20 mA, 0 to 135 Ω, 0 to 10 Vdc, 0 to 20 mA, position proportional and floating control. The available output signals include 4 to 20 mA, 0 to 135 Ω, 0 to 10 Vdc, 0 to 20 mA, and 0 to 1000 Ω. SQM5… actuators are available with up to six internal, easily adjustable switches.

A selection of exchangeable circuit boards provide a variety of functions including auto/manual selector switch, manual forward/reverse toggle switch, zero and span adjustment, parallel or master/slave operation, split range control, input signal override, and selectable electronic linearization.

The SQM5… is engineered for precision. It is particularly well suited for applications requiring a high degree of modulating accuracy and repeatability. Drive shaft play is limited to 0.3° with a modulating accuracy of 250 repositions through 90° of travel.

The SQM5… actuator may be mounted in any position. A selection of mounting brackets and shafts provides installation flexibility and allows for the simple replacement of most competitive actuators.

Features

- Modulating accuracy of 250 repositions through 90°
- Two limit switches, plus up to four internal auxiliary switches
- Fully closed “economy position” switch
- Drive shaft and cam drum disengagement clutches
- Auto/manual switch, manual control forward/reverse toggle switch
- UL, CSA approved 24 and 110 Vac versions
- CE approved 220 Vac versions
- Field reversible clockwise (cw) or counterclockwise (ccw) operation
- Various torque ratings and running times available
- Selection of field exchangeable single-ended and dual-ended shafts
- Mounting brackets to replace competitive actuators

Features, Continued

- Connections for both base and face mounting
- Low hysteresis actuator and potentiometer gearing
- Externally visible position indication
- Selection of input and output signals
- Zero and span adjustment
- Field exchangeable circuit boards and potentiometers
- Electronic damper linearization function
- Split range and selectable parallel or master/slave operation
- Adjustable input signal override function

Application

SQM5… actuators are uniquely suited for both industrial and commercial applications. The high level of accuracy permits precise modulating control of industrial process and process heating applications, often significantly enhancing performance and product quality.

In commercial and industrial burner applications requiring high turndown and reliable ignition, the auxiliary switches can be applied to create separate positions for burner ignition and low fire. In dual fuel applications, additional switches can be used to create separate high fire, low fire and ignition positions for each fuel. The economy position switch is used to drive the actuator to the full closed position when the burner is off.

In all applications, commissioning is simplified. Shaft and cam drum disengagement clutches allow for the quick manual alignment of the actuator shaft and switch cams. The forward/reverse toggle switch in combination with the auto/manual selector switch provides direct manual control.

Table Of Contents

Application Page 2
Product Numbers
Product numbers for pre-assembled UL/CSA/CE-approved actuators, Table 1 Page 4
Product numbers for accessories, Table 2 Page 5
SQM5… Product Number Identification Legend Page 6
Installation and Operating Instructions
Shaft Installation Page 7
Rotational Direction Verification Page 8
Actuator Mounting Page 8
Switch Adjustment Page 8
Shaft Adjustment Page 9
Cam Drum Adjustment Page 9
Wiring
Electrical Connection Page 9
Grounding Page 9
Wiring Connections
AGA56.1… circuit boards Page 10
AGA56.41/42/43… circuit boards Page 11
AGA56.9… circuit boards Page 13
Commissioning
Modulation Adjustment Page 15
Zero Adjustment Page 15
Span Adjustment Page 15
Cover Installation Page 16
Features
SQM5x.xxxxx**Z**x actuators Page 16
SQM5x.xxxxx**G**x actuators Page 18
SQM5x.xxxxx**H**x actuators Page 18
SQM5x.xxxxx**K**x actuators Page 18
SQM5x.xxxxx**A**x actuators Page 18
Service Guide
Reversing Rotational Direction Page 18
Shaft Installation Page 20
Circuit Board Installation Page 20
AGA56.41/42/43… Page 20
AGA56.9A Page 22
AGA56.1A97 Page 24
Potentiometer Removal/Installation Page 25
Specification Data Page 26
Dimensions Page 29

Product Numbers

Table 1. Product Numbers for Pre-assembled Actuators.

Torque[1]	Running Time [2]	Rotation direction	Input Control Signals[3]				Product Number		
[lb-in]	90°@ 60 Hzsec		Line Voltage	4-20 mA	0-135 Ω	0-10 Vdc	110 V	220 V	24 V
90	8	ccw	x	x			SQM50.261R1G3		
90	8	cw	x	x			SQM50.261R1G3R		
90	8	ccw	x				SQM50.264R1A	SQM50.264R2A	
90	8	cw	x				SQM50.264R1A0R		
90	8	ccw	x				SQM50.264R1A3		
90	8	cw	x	x			SQM50.264R1G3R		
90	8	ccw	x	x			SQM50.264R1G4		
140	12	ccw	x	x			SQM50.361R1G3		
140	12	cw	x	x			SQM50.361R1G3R		
140	12	ccw	x	x			SQM50.361R1G7		
140	12	ccw	x	x			SQM50.364R1G3		
140	12	cw	x	x			SQM50.364R1G3R		
140	25	ccw	x				SQM50.461R1A		
140	25	ccw	x				SQM50.461R1A3		
140	25	ccw	x	x			SQM50.461R1G3		
140	25	cw	x	x			SQM50.461R1G3R		
140	25	ccw	x		x		SQM50.461R1H3		
140	25	ccw	x	x	x	x	SQM50.461R1Z3		
140	25	ccw	x	x	x	x	SQM50.461R1Z7		
140	25	ccw	x				SQM50.464R1A		SQM50.464R8A
140	25	cw	x				SQM50.464R1A0R		
140	25	ccw	x				SQM50.464R1A3		
140	25	cw	x				SQM50.464R1A3R		
140	25	ccw	x	x			SQM50.464R1G3		SQM50.464R8G3
140	25	cw	x	x			SQM50.464R1G3R	SQM50.464R2G3R	
140	25	ccw	x	x			SQM50.464R1G7		
140	25	cw	x	x			SQM50.464R1G7R		
140	25	ccw	x		x		SQM50.464R1H3		SQM50.464R8H3
140	25	ccw	x	x	x	x	SQM50.464R1Z3	SQM50.464R2Z3	SQM50.464R8Z3
200	25	ccw	x				SQM53.464R1A		
200	25	ccw	x				SQM53.464R1A3		
200	25	ccw	x	x			SQM53.464R1G3		
200	25	ccw	x	x			SQM53.464R1G7		
200	25	cw	x	x			SQM53.464R1G7R		
200	25	ccw	x	x	x	x	SQM53.464R1Z3	SQM53.464R2Z3	
200	25	ccw	x	x	x	x	SQM53.467R1Z3		
200	25	cw	x	x	x	x	SQM53.467R1Z3R		
200	25	ccw	x					SQM53.467R2A3	
310	37	ccw	x				SQM56.564R1A		
310	37	ccw	x	x			SQM56.564R1G4		
310	37	ccw	x	x			SQM56.564R1G7		
310	37	ccw	x		x		SQM56.564R1H4		
310	37	ccw	x	x	x	x	SQM56.564R1Z3		
400	50	ccw	x	x			SQM56.664R1G3		
400	50	ccw	x	x	x	x	SQM56.664R1Z3		
400	50	cw	x				SQM56.667R1A3R		
400	50	ccw	x	x			SQM56.667R1G3		
400	50	cw	x	x			SQM56.667R1G7R		
400	50	ccw	x	x	x	x	SQM56.667R1Z3		

1. Torque will vary with the selection of the shaft. See *Specifications*.
2. Running time for 135° → multiply by 1.5. For 50 Hz → multiply by 1.2
3. SQM5x.xxxxx**Z**x models also accept a 0 to 20 mA input signal.

Table 2. Product Numbers for Accessories.

Electronic Circuit Boards

AGA56.1A97	24-250 Vac	(A) board for SQM5x.xxxxx**A**x
AGA56.9A87	24 Vac	(Z) board for SQM5x.xxxxx**Z**x
AGA56.9A17	110 Vac	(Z) board for SQM5x.xxxxx**Z**x
AGA56.9A27	220 Vac	(Z) board for SQM5x.xxxxx**Z**x
AGA56.41A87	24 Vac	(G) board for SQM5x.xxxxx**G**x
AGA56.41A17	110 Vac	(G) board for SQM5x.xxxxx**G**x
AGA56.41A27	220 Vac	(G) board for SQM5x.xxxxx**G**x
AGA56.42A87	24 Vac	(H) board for SQM5x.xxxxx**H**x
AGA56.42A17	110 Vac	(H) board for SQM5x.xxxxx**H**x
AGA56.42A27	220 Vac	(H) board for SQM5x.xxxxx**H**x
AGA56.43A87	24 Vac	(K) board for SQM5x.xxxxx**K**x
AGA56.43A17	110 Vac	(K) board for SQM5x.xxxxx**K**x
AGA56.43A27	220 Vac	(K) board for SQM5x.xxxxx**K**x

See Product Number Identification Legend, Figure 1.

Mounting Brackets & Adapters

AGA57.3	for replacement of Honeywell MOD III, IV actuators
AGA57.4	for replacement of Honeywell M640/740/940 and Barber Colman EA20/40/50/60 actuators. Directly adaptable to Eclipse butterfly valves.
ASK33.9	mounting kit for direct attachment to Siemens VKF41... butterfly valve. (Shaft AGA58.1 required)

Shafts

AGA58.1	10 mm round with key. Gear end only.
AGA58.2	12 mm round with key. Gear end only.
AGA58.3	9 mm square. Dual-ended.
AGA58.4	3/8 inch square. Dual-ended.
AGA58.7	14 mm round with key. Gear end only.

For exact shaft sizes, see *Dimensions*.

Crank Arm, Push Rods

338 031 Crank arm kit. Includes two crank arms for connecting the AGA58.4 shaft to a ∅ 1/2-inch damper shaft with two ball joints. (Does not include push rod.)

338 041 ∅ 5/16" damper push rod, 12 inches long.
338 042 ∅ 5/16" damper push rod, 15 inches long.
338 043 ∅ 5/16" damper push rod, 18 inches long.
338 044 ∅ 5/16" damper push rod, 24 inches long.
338 045 ∅ 5/16" damper push rod, 36 inches long.
338 046 ∅ 5/16" damper push rod, 48 inches long.

Potentiometers

ASZ12.803 and ASZ12.30 1000Ω, 90°
ASZ12.833 and ASZ12.33 1000Ω, 135°
ASZ22.803 and ASZ22.30 1000/1000Ω double potentiometer, 90°
ASZ22.833 and ASZ22.33 1000/1000Ω double potentiometer, 135°
ASZ16.703 135Ω, 90° (wire wound)
ASZ16.733 135Ω, 135° (wire wound)
ASZ66.733 135Ω/135Ω, double potentiometer 135° (wire wound)

Additional potentiometer models available. See *Siemens technical data sheet 7921*.

Product Number Identification Legend

For actuator identification only. To select product numbers for ordering, see Table 1.

Figure 1. SQM5… Product Number Identification Legend.

SQM5 0 . 4 8 0 R 1 Z 3 R

Actuator family

Torque in-lb @ 60 (50) Hz.

- **0** 90 for 8 (10) sec. running time
- **0** 140 for 12 (15), 25 (30), 37 (45) sec.
- **3** 200 for 25 (30) sec.
- **6** 310 for 37 (45) sec.
- **6** 400 for 50 (60), 75 (90)sec.

Running time for 90°

Not all actuator running times are available in each torque. Refer to table 1

60 Hz.		50 Hz.	
2	8 sec.	**2**	10 sec.
3	12 sec.	**3**	15 sec.
4	25 sec.	**4**	30 sec.
5	37 sec.	**5**	45 sec.
6	50 sec.	**6**	60 sec.

Number of SPDT switches

- **6** 2 limit and 4 auxiliary switches

Shaft selection

- **0** no shaft **(shaft must be ordered separately)**
- **1** round 10 mm, single ended (for use with VKF41... butterfly valves)
- **4** square 3/8 inch, dual ended
- **7** round 14 mm, single ended

Approvals

- **R** UL recognized, CSA certified

Operating voltage (Vac @50-60 Hz)

- **1** 110-120 Vac
- **2** 220-240 Vac
- **8** 24 Vac

Internal circuit board (SQM5x.xxxxx **G, H, K , Z**x actuators require potentiometer ASZ…)

- **A** AGA56.1A97 (position proportional control)
- **G** AGA56.41A... (4 to 20 mA input)
- **H** AGA56.42A... (0 to 135 Ohm input)
- **K** AGA56.43A... (0 to 10 Vdc input)
- **Z** AGA56.9... (all inputs/outputs, linearization, split ranging, override and pre-set positioning)

Potentiometer (1000 Ohm required when using SQM5x.xxxxx **G, H, K, Z**x actuators)

- **3** ASZ12.30 (1000 ohm, 90°)
- **4** ASZ12.33 (1000 Ohm, 135°)
- **7** ASZ22.30 (1000/1000 Ohm, 90°)
- **8** ASZ22.33 (1000/1000 Ohm, 135°)
- **B** ASZ16.703 (135 Ohm, 90°)
- **C** ASZ16.733 (135 Ohm, 135°)
- **L** ASZ66.733 (135/135 Ohm, 135°)

Rotational Direction (Product numbers ending without R are ccw)

- **R** Clockwise (when facing gear end. See *Figure 6* .)

Installation and Operation Instructions

SQM5… actuators are sometimes shipped without the shaft installed. To install the selected shaft:

1. Loosen the two screws on the actuator cover corners. See Figure 2.
2. Lift the screws and raise the cover. See Figure 3.

Shaft Installation

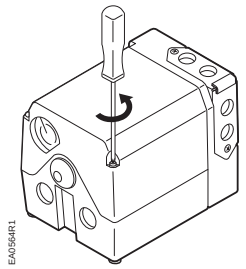

Figure 2.

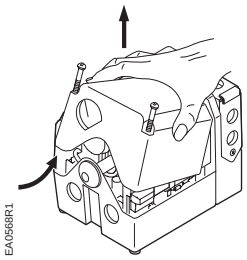

Figure 3.

3. Each shaft is supplied with two washers and a “C” clip. See Figure 4. Using spreading pliers, remove the “C” clip and the washers from the shaft.

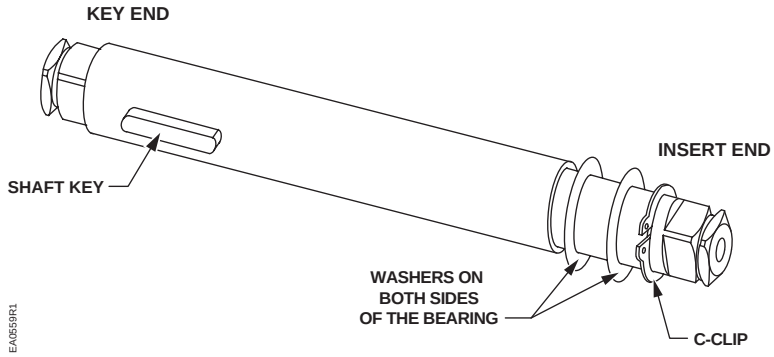

Figure 4.

4. Insert the “insert end” of the shaft into the “gear end” of the actuator.
5. Push the shaft until the “insert end” reaches just short of the brass bushing at the other end of the actuator.
6. Put one of the washers on the insert end of the shaft. See Figure 5.

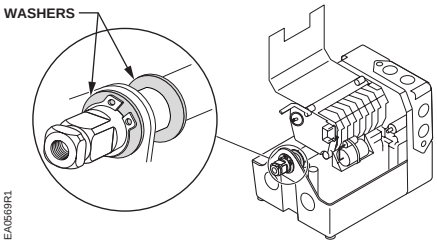

Figure 5.

7. Line up the “shaft key” with the key slot on the “gear end” of the actuator and slide the shaft until the “insert end” is completely through the brass bushing.
8. Place the second washer onto the “insert end” of the shaft. Using spreading pliers, install the “C” clip.

Rotational Direction Verification

Actuator model numbers that end with “R” are factory configured for clockwise (cw), minimum to maximum rotation when facing the gear end of the actuator, or counterclockwise (ccw) rotation when facing the other end of the actuator. The gear end of the actuator is the side opposite of the visual position indicator.

To field reverse the direction of rotation, see *Service Guide*, “Reversing Rotational Direction”.

Actuator Mounting

SQM5… actuators can be mounted in any orientation using the four 1/4"-20 UNC tapped holes located on the bottom corners of the actuator base. Optional base mounting brackets are available. See Table 2.
SQM5… actuators can also be face mounted using self tapping screws in combination with the various holes on the face of the actuator gear end.

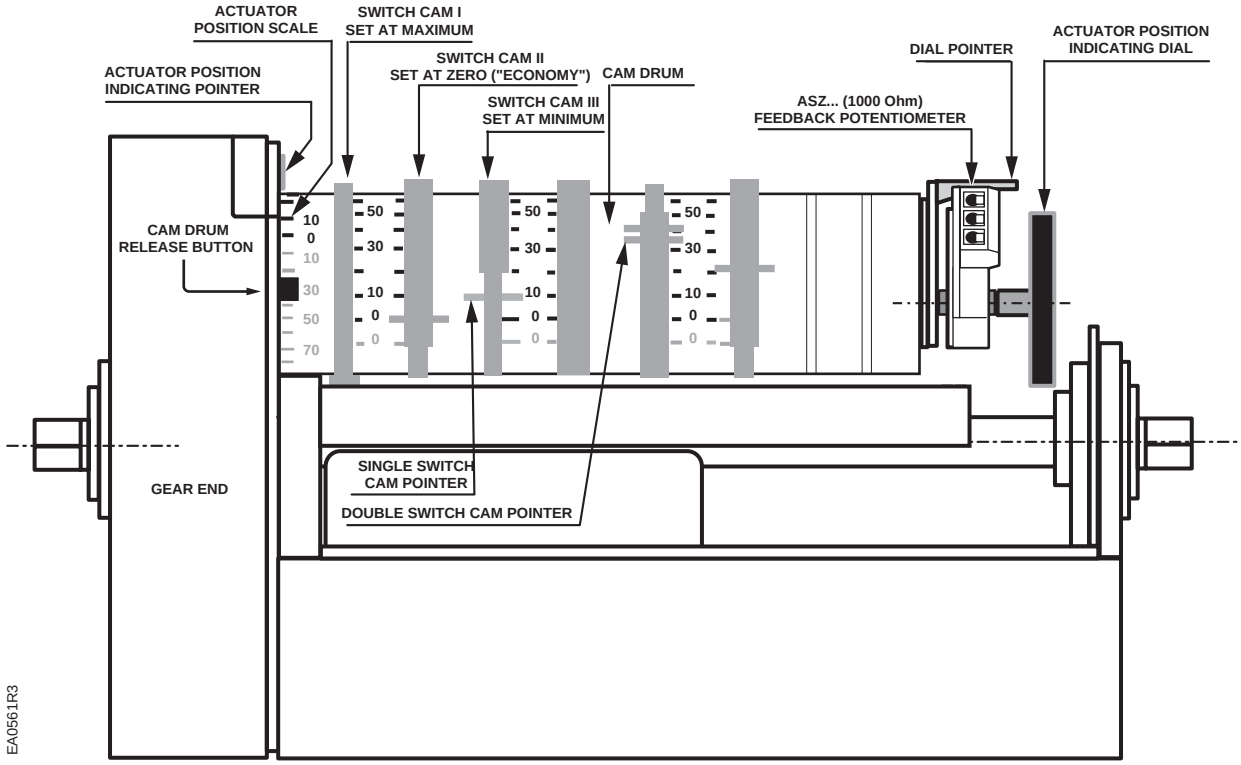

Figure 6. Component Identification on the Cam Drum Side of the SQM5… Actuator.

Switch Adjustment

See Figure 6.

All SQM5…actuators are factory wired with Switch I (maximum), Switch II (fully closed “economy position”) and Switch III (minimum). The individual switch cams I, II, and III are factory set to 90°, 0° and 10° respectively.

NOTE: The single switch cam pointers are used together with the black scales when configured for counterclockwise (ccw) operation.

The double switch cam pointers are used together with the red scales when configured for clockwise (cw) operation.

The individual switch cams can be adjusted by hand or with the use of the tool attached to the outside of the hinged switch terminal protection lid.

Switch Adjustment, Continued

NOTE: If a potentiometer is installed, the adjustable range of the switches depends on the range of the potentiometer.
SQM5x.xxxxx**A**x actuators may be adjusted between 0° and 160°.
SQM5x.xxxxxx**3** actuators have a 90° potentiometer and the switches must be adjusted only between 0 and 90°.
SQM5x.xxxxxx**4** actuators have a 135° potentiometer and the switches must be adjusted only between 0 and 135°.

Shaft Adjustment

See Figure 6.

The actuator shaft can be disengaged by pressing the silver shaft release button. The button is located above the grounding screw, under the hinged terminal protection cover, and to the right of the auto/manual switch. After pressing the shaft release button in and slightly upward, the shaft can be manually rotated. After the shaft has been manually aligned to the closed position, re-engage the shaft by pushing the shaft release button downwards.

Cam Drum Adjustment

See Figure 6.

Position Indicating Dial Adjustment

Once the shaft has been set, the cam drum must be manually aligned by pressing and holding the black cam drum release button (see Figure 6). Rotate the cam drum until the “0” mark on the actuator position scale (left scale on the cam drum) is aligned with the gray actuator position indicating pointer.

The actual position of the SQM5… actuator is indicated by the gray actuator position indicating pointer (see Figure 6). The position is also displayed by the indicating dial through the housing’s window. Ensure that the actuator position indicating dial is aligned with the actuator position scale. If necessary, rotate the dial in the clockwise direction.

CAUTION:

Turning the dial in the counterclockwise direction may loosen the potentiometer locking screw.

Wiring

Electrical Connection

SQM5… actuators are equipped with two removable conduit connection plates located on the upper corner of the gear housing. Each plate is provided with two threaded connections for 1/2" NPSM conduit connectors. The use of flexible stranded wire is recommended.

Grounding

CAUTION:

To avoid electro-magnetic interference, the SQM5… actuators must be grounded.

The ground terminal is located to the right of the auto/manual switch.

Disconnect the circuit board wire marked 51 during high voltage testing. Reconnect it to the grounding terminal after the test.

Wiring Connections

NOTE: SQM5… actuators require a single source, single phase power supply.

Wiring connections vary depending on which AGA56…. circuit board is installed.

AGA56.1… circuit boards.

See Figures 7 and 8.

Manual Operation

1. Set the AUTO/MAN switch in the MAN position.
2. Connect ground to the screw located below the shaft release button.
3. Connect neutral to the double terminal block, located on the left side of the gray switch housing.
4. Only terminal "L" must be to enable manual operation. The actuator can now be driven to the maximum position (switch cam I) or the fully closed "economy position" (switch cam II) by using the toggle switch located to the left of the AUTO/MAN switch.

Automatic Operation

1. Set the AUTO/MAN switch in the AUTO position.
2. Connect ground to the screw located below the shaft release button.
3. Connect neutral to the double terminal block located on the left side of the gray switch housing.
4. Connect line voltage to terminal A to drive the actuator in the opening direction.
5. Connect line voltage to terminal Z to drive the actuator in the closing direction.

CAUTION:

Do not power terminals A and Z simultaneously. Actuator damage will occur.

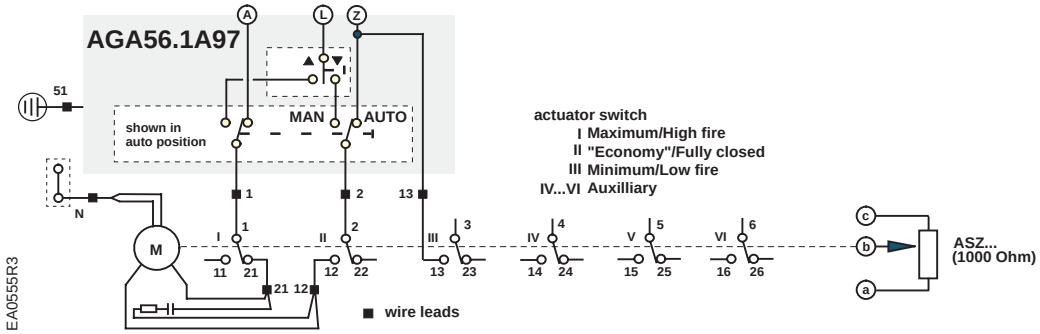

Figure 7. Basic Functional Diagram of AGA56.1…

Wiring, Continued

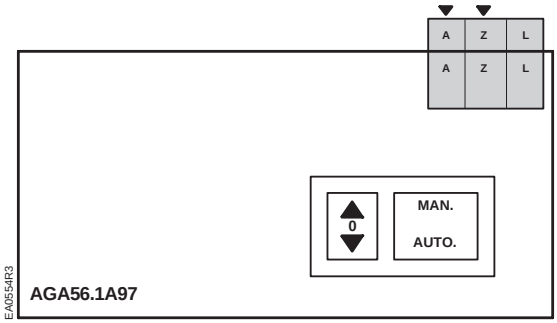

Figure 8. AGA56.1A97 Terminal/Auto-Manual Board.

AGA56.41/42/43…
Circuit Boards.

See Figures 9 and 10.

Manual Operation

1. Set the AUTO/MAN switch in the MAN position.
2. Connect ground to the screw located below the shaft release button.
3. Connect neutral to terminal N.
4. Only terminal "L" must be powered to enable manual operation. The actuator can now be driven to the maximum (high fire) position (switch cam I) or the fully closed "economy position" (switch cam II) by using the toggle switch located to the left of the AUTO/MAN switch.

Automatic Operation

1. Set the AUTO/MAN switch in the AUTO position.
2. Connect ground to the screw located below the shaft release button.
3. Connect neutral to terminal N.
4. Connect line voltage at all times to terminal L to provide power to the electronic circuit board.
5. Connect line voltage to terminal LR to provide power when modulating. Connect line voltage to Terminal LR **only** after removing power on terminals A and Z (otherwise actuator damage may result).
6. Connect line voltage to terminal A to drive the actuator to the maximum (high fire purge) position.
   Once the maximum position is reached, terminal 11 (on switch I) will be energized to provide position feedback.
7. Connect power to terminal ZL to drive the actuator to the minimum (low-fire) position. Once the minimum position is reached, terminal 23 (on switch III) will be energized to provide position feedback. Adjustment of switch III will determine the low-fire stop position. Switch III (low fire) must be set at a higher position than switch II (fully closed). Terminal ZL may be energized only after removing power from terminals A, Z, 13, and LR.
8. Connect line voltage to terminal Z to drive the actuator to the fully closed/economy position (switch II).
9. Connect the input control signal wires to the appropriate terminals. See Figure 9.

CAUTION:

Do not power terminals A and Z simultaneously. Actuator damage will occur.

Wiring, Continued

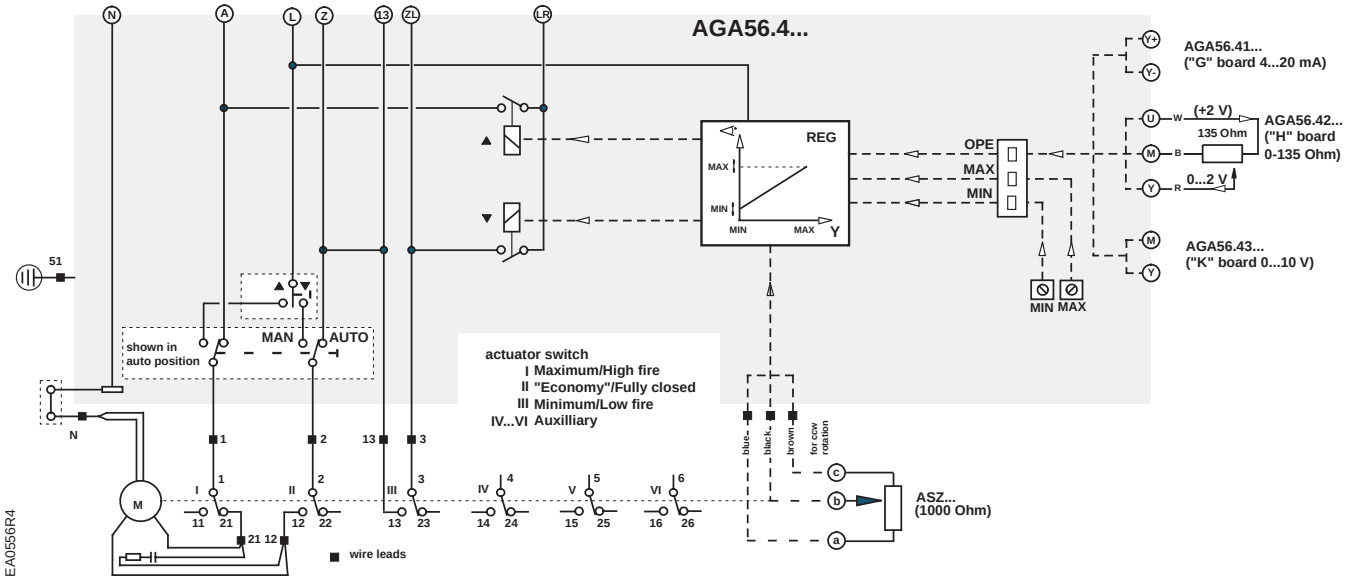

Figure 9. Basic Functional Diagram of AGA56.4…

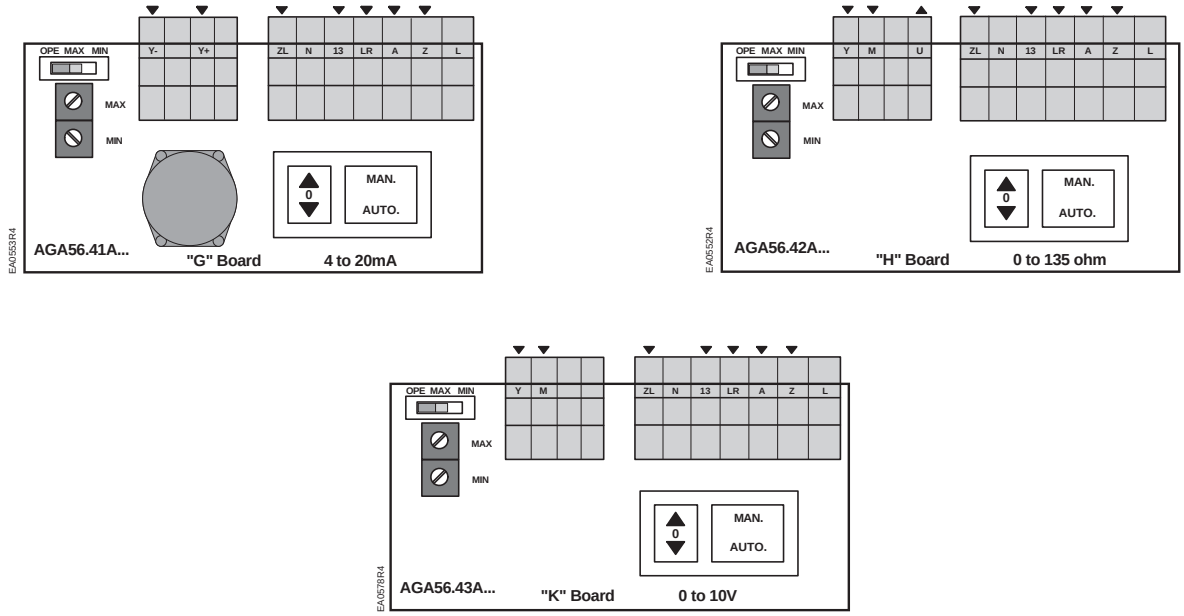

Figure 10. AGA56.41/42/43… Terminal and Trim Potentiometer Boards.

AGA56.9… Circuit Boards

See Figures 11 and 12.

Manual Operation

1. Set the AUTO/MAN switch in the MAN position.
2. Connect ground to the screw located below the shaft release button.
3. Connect neutral to terminal N.
4. Only terminal "L" must be powered to enable manual operation. The actuator can now be driven to the maximum (high fire) position (switch cam I) or the fully closed "economy position" (switch cam II) by using the toggle switch located to the left of the AUTO/MAN switch.

Automatic Operation

1. Set the AUTO/MAN switch in the AUTO position.
2. Connect ground to the screw located below the shaft release button.
3. Connect neutral to terminal N.
4. Connect line voltage at all times to terminal L to provide power to the electronic circuit board.
5. Connect line voltage to terminal L1 to provide power when modulating. Connect line voltage to terminal L1 **only** after removing power on terminals A and Z (otherwise actuator damage may result).
6. Connect line voltage to terminal A to drive the actuator to the maximum (high fire purge) position. Once the maximum position is reached, terminal 11 (on switch I) will be energized to provide position feedback.
7. Connect power to terminal ZL to drive the actuator to the minimum (low-fire) position. Once the minimum position is reached, terminal 23 (on switch III) will be energized to provide position feedback. Adjustment of switch III will determine the low-fire stop position. Switch III (low fire) must be set at a higher position than switch II (fully closed). Terminal ZL may be energized **only** after removing power from terminals A, Z, 13, and LR.
8. Connect line voltage to terminal Z to drive the actuator to the fully closed/economy position (switch II).
9. Connect the input control signal wires to the appropriate terminals. See Figure 11.

CAUTION:

Do not power terminals A and Z simultaneously. Actuator damage will occur.

Wiring, Continued

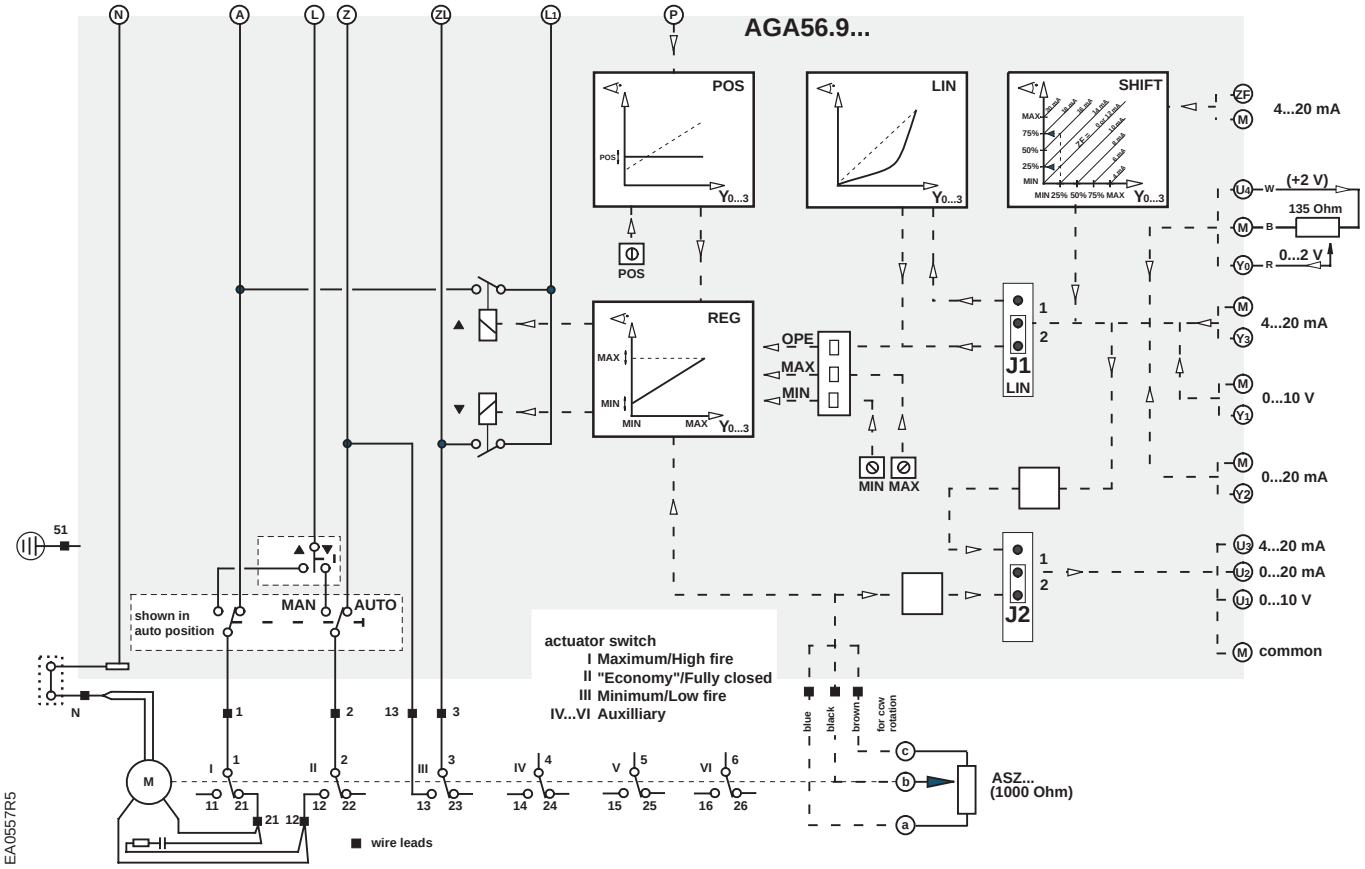

Figure 11. Basic Functional Diagram of AGA56.9…

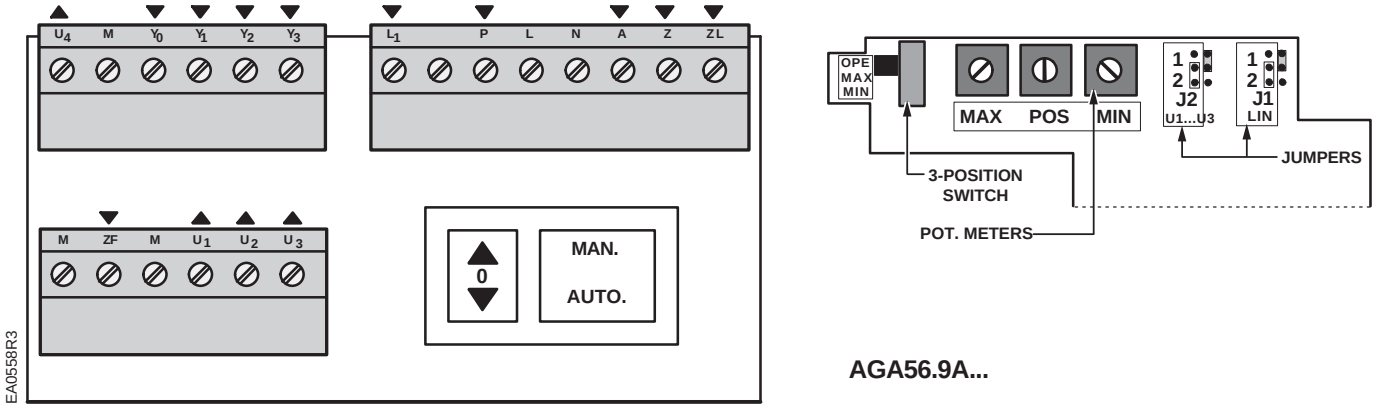

Figure 12. AGA56.9… Terminal and Trim Potentiometer/Jumper Board.

Modulation Adjustment

See Figures 10 and 12.

The blue trim potentiometers allow the adjustment of the minimum (zero) and maximum (span) positions.
The factory setting of the MIN trim potentiometer is rotated fully counter clockwise.
The factory setting of the MAX trim potentiometer is rotated fully clockwise.

Zero Adjustment

Set the OPE/MAX/MIN slide switch to MIN. The blue MIN trim potentiometer can now be gently adjusted to the required minimum position. Return the OPE/MAX/MIN slide switch to OPE for operation.

NOTE: Do not set switch cam I higher than:

90° when using feedback potentiometers ASZxx.30
135° when using feedback potentiometers ASZxx.33

Span Adjustment

Set the OPE/MAX/MIN slide switch to MAX. The blue MAX trim potentiometer can now be gently adjusted to the required maximum position. Return the OPE/MAX/MIN slide switch to OPE for operation.

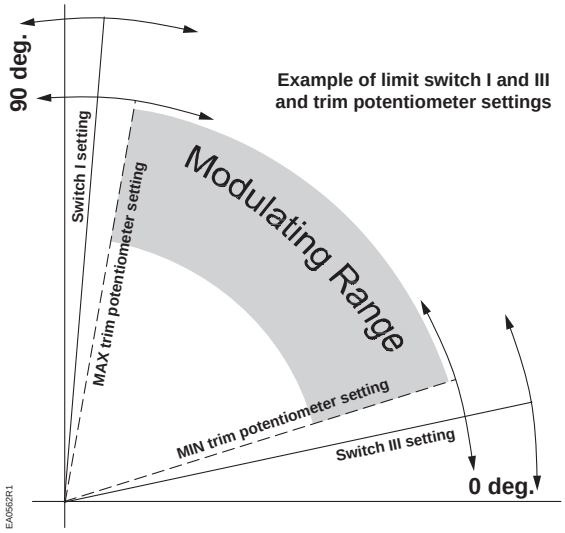

Figure 13. Switch cam and Trim Potentiometer Setting.

NOTE: The actual minimum and maximum modulating range is determined either by the setting of the MIN and MAX trim potentiometers or the setting of switch cam III (Minimum) and switch cam I (Maximum). The actuator can never modulate outside of the range set by switch cam I and III. If the MIN and MAX trim potentiometers are set outside the setting range of switch cams I and III, then the switch cam settings determine the modulating range. If a soft stop is desired, the modulating range can be defined by the trim potentiometers if the MIN and MAX trim potentiometers are set inside the setting range of switch cams I and III. See the example in Figure 13.

Cover Installation

1. Lift the two screws on the cover corners and slide the cover end into the grooves at the gear end of the actuator. See Figure 14.
2. Press the cover into place and then press the screws inward and tighten. See Figure 15.

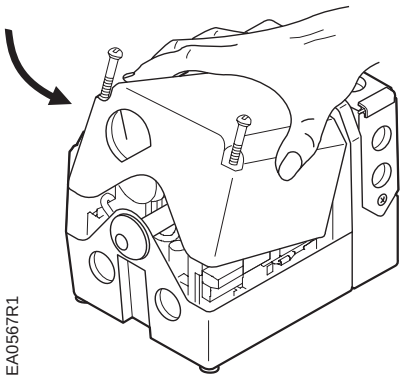

Figure 14.

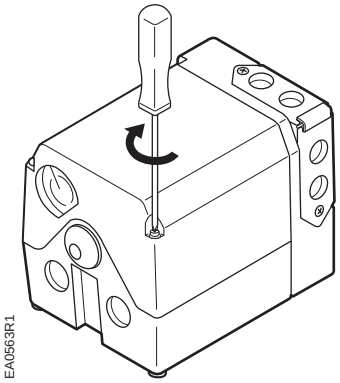

Figure 15.

Features of SQM5x.xxxxxZx Actuators

SQM5xx.xxxxx**Z**x actuators contain the AGA56.9A… multi function circuit board. This circuit board provides the following features:

Multiple Input Signals

The AGA56.9A… circuit board accepts the following input signals:

Line voltage

- Power to A drives the actuator open to the setting of switch cam I (Maximum).
- Power to ZL drives the actuator closed to the setting of switch cam III (Minimum).
- Power to Z drives the actuator closed to the setting of switch cam II (Economy).
- **4 to 20 mA** (Signal to Y3, common to M)
- **0 to 135 Ω** (Slide wire signal to Y0, potentiometer connected to M and U4)
- **0 to 10 Vdc** (Signal to Y1, common to M)
- **0 to 20 mA** (Signal to Y2, common to M)

Multiple Output Signals

The AGA56.9A… circuit board provides the following output signals:

- **4 to 20 mA** (Signal from U3, common to M)
- **0 to 10Vdc** (Signal from U1, common to M)
- **0 to 20mA** (Signal from U2, common to M)

Double potentiometers ASZ22… provide additional output signals.

Electronic Linearization Function

Butterfly valves have non-linear flow characteristics. Near the fully closed position, a small change in the valve's position will produce a very large change in flow. Near the fully open position, a large position change will produce a relatively small change in flow.

The linearization function is intended to minimize the initial steep flow curve characteristics of a typical butterfly valve. The linearization function is enabled when Jumper J1 is in position 1 (upper position). Consequently, the actuator will make smaller rotational movements when subjected to lower input signals and larger rotational movements when subjected to higher input signals.

For example (based on a 90° modulating range), a change in input signal from 4 to 8 mA will cause a rotational movement of 11.25°. An equal change from 16 to 20 mA will cause a rotational movement of 45°. Thus, with the linearization function enabled, the change in flow is closely proportional to the change in input signal.

The linearization function is disabled when Jumper J1 is in position 2 (lower position). When disabled, the rotational movement of the shaft is proportional to the input signal.

Input Signal Override

Line voltage to terminal P will drive the actuator to a pre-set adjustable position, overriding all modulating input signals. Use the potentiometer marked POS to adjust the override position to any setting within the setting range of switch cams I and III.

NOTE: The input signal override can also be used for the ignition position of burners if different from the low fire position.

Parallel Operation

Set Jumper J2 in position 1 (upper position) to configure the actuator for parallel operation. Input signals Y0, Y1, Y2 or Y3 are directly shunted to output signals U1, U2 and U3. All output signals are available regardless of which input signal is applied.

Master/Slave Operation

Set J2 in position 2 (lower position) to configure the actuator for master/slave operation. The output signals U1, U2 and U3 reflect actual shaft position.

Split Ranging

AGA56.9… circuit boards have a modulating signal shift feature which can be used for split ranging. If no signal is present on Y0, Y1, Y2 or Y3, the actuator will modulate through the full rotational range in response to a 12 to 20 mA signal applied at ZF. If a maximum signal is present on Y0, Y1, Y2, or Y3, then the actuator will modulate through the full rotational range in response to a 4 to 12 mA signal applied at ZF. (Maximum signal can be easily achieved by bridging terminals U4 and Y0.) See Figure 16.

NOTE: It is possible to configure the actuator for split range operation 12 to 4 mA and 20 to 12 mA. Consult your authorized Siemens Building Technologies combustion products sales representative for details.

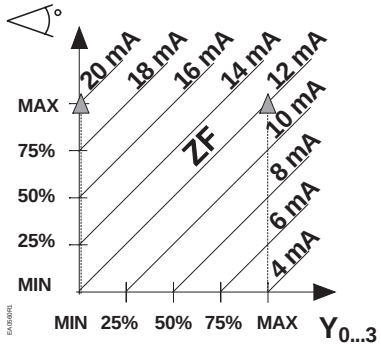

Figure 16. Split Ranging.

Features of SQM5x.xxxxxGx, SQM5x.xxxxxHx, SQM5x.xxxxxKx Actuators

SQM5x.xxxxx**G**x actuators contain the AGA56.41A… circuit board with terminals Y- and Y+ for 4 to 20 mA modulating input.

SQM5x.xxxxx**H**x actuators contain the AGA56.42A… circuit board with terminals Y, M and U for 0 to 135 Ω modulating input.

SQM5x.xxxxx**K**x actuators contain the AGA56.43A… circuit board with terminals Y and M for 0 to 10 Vdc modulating input.

Input Signals

The AGA56.4xA… circuit boards accept the following additional input signal:

Line voltage

- Power to A drives the actuator open to the setting of switch cam I (Maximum).
- Power to Z drives the actuator closed to the setting of switch cam II (Economy).
- Power to ZL drives the actuator closed to the setting of switch cam III (Minimum).

Output Signals

The AGA56.4xA… circuit boards do not provide output signals. Install a double potentiometer ASZ22…to obtain a 0 to 1000 Ω actuator position output signal.

Features of SQM5x.xxxxxAx Actuators

The AGA56.1A97… circuit boards accept the following additional input signal:

Input Signals

Line voltage

- Power to A drives the actuator open to the setting of switch cam I (Maximum).
- Power to Z drives the actuator closed to the setting of switch cam II (Economy).
- Power to switch III, terminal 3 drives the actuator to the setting of switch cam III (Minimum).

Output Signals

The AGA56.1A97 circuit board provides no output signals. Install an ASZ… potentiometer to obtain an actuator position output signal.

Service Guide

WARNING:

Disconnect the power supply to the actuator before performing any service functions.

Reversing Rotational Direction

1. Disconnect the wires marked 21 and 12, and reverse.
2. Adjust all switch cams to the desired settings (see Figure 6):
   - For CCW rotation use the black cam drum scales and the single switch cam pointers.
   - For CW rotation, use the red cam drum scales and the double switch cam pointers.

   NOTE: Press and hold the black cam drum release button to rotate the cam drum. This will give easy access to the switch cams and a better view of the cam drum scales.

If no potentiometer ASZ… is installed, the reversing procedure is complete. If a potentiometer ASZ… is installed, complete Steps 3 through 9.

Reversing Rotational Direction, Continued

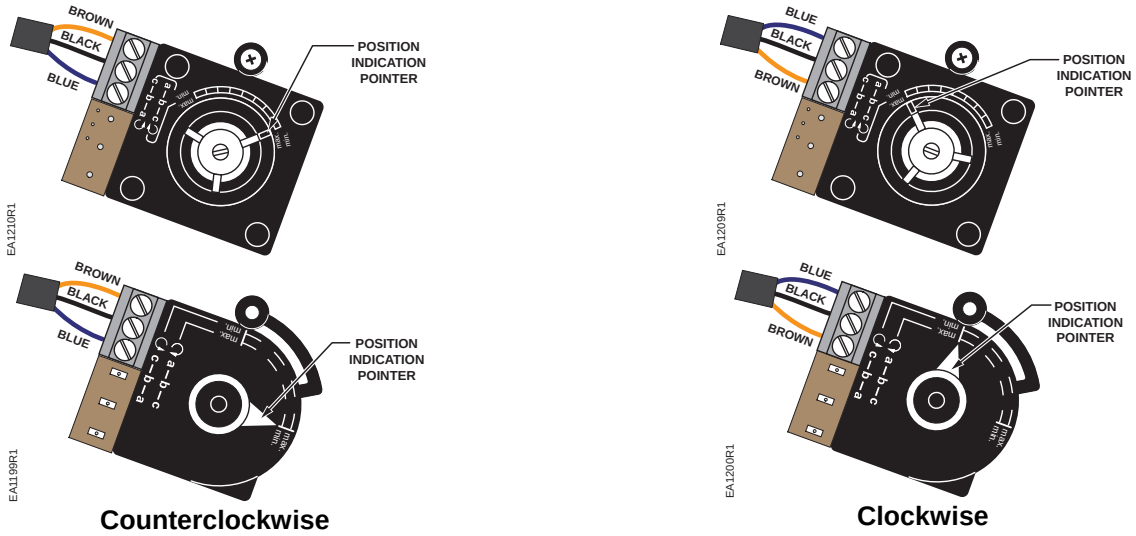

Figure 17. Reversing Rotational Direction on the ASZ Potentiometer.

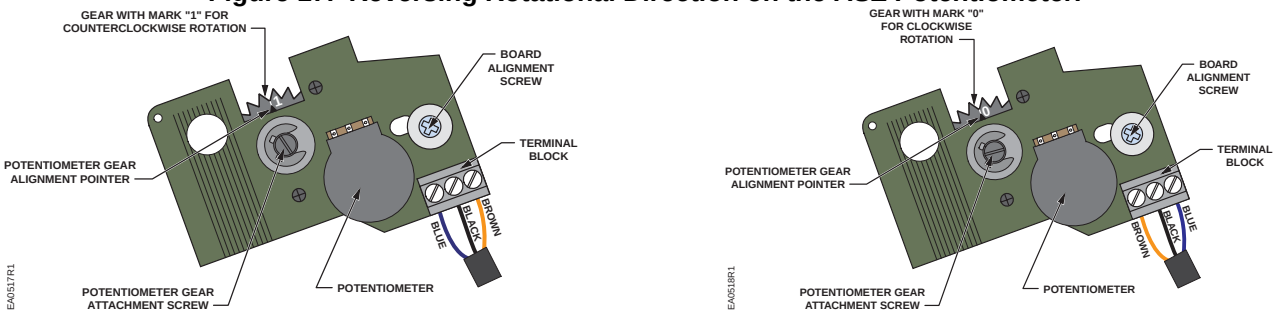

Figure 17a. Reversing Rotational Direction on the ASZ Potentiometer (Gear Models).

3. Disconnect the blue and brown wires from the terminal block located on the ASZ… potentiometer circuit board and reverse. The black wire remains connected to the middle terminal. See Figures 17 and 17a.

4. Remove the white plastic actuator position-indicating dial by gently pulling while rotating in the clockwise direction. See Figure 6.

5. The actuator position indicating pointer, located near the actuator gear end of the cam drum, must point to the “0” mark on the actuator position scale (scale on the cam drum nearest to the actuator gear end). Press and hold the black cam drum release button while manually rotating the cam drum.

6. Loosen the black potentiometer cam attachment screw approximately one turn. Gently wedge a small screwdriver between the potentiometer and the gray plastic housing. Gently twist the screwdriver until the potentiometer releases from the cam drum shaft.

7. Change potentiometer end position:
   - Manually rotate the potentiometer position indication pointer **exactly** to the other end mark (see Figure 17).
   - Gear models (see Figure 17a):
     For clockwise rotation, manually rotate the potentiometer gear until the white line next to the “0” mark on the potentiometer gear face is **exactly** in alignment with the potentiometer gear alignment pointer.
     For counterclockwise rotation, manually rotate the potentiometer gear until the white line next to the “1” mark on the potentiometer gear face is **exactly** in alignment with the potentiometer gear alignment pointer

Reversing Rotational Direction, Continued

8. Firmly tighten the black potentiometer cam attachment screw while manually holding the potentiometer position indication pointer in alignment. Check the alignment again.
9. Re-install the white actuator-indicating dial by gently pressing it onto the potentiometer cam attachment screw. Align scale position “0” on the actuator position indicating dial with the dial pointer by rotating the dial in the clockwise direction to avoid loosening the potentiometer cam attachment screw.

Shaft Installation

See *Installation and Operation Instructions*.

Preparation Before Circuit Board Installation

WARNING:

Disconnect the power supply to the actuator before replacing the circuit boards.

The black circuit board mounting bracket, installed on the inside base of the SQM5… actuator has four vertical, slotted circuit board supports. Remove the terminal section and circuit board(s) from the mounting bracket.

The actuator motor capacitor is attached to the lower section of the gray plastic switch housing using snap-on holding clips. Gently pull the capacitor forward until it unclips and temporarily place it on top of the gear housing. See Figure 18.

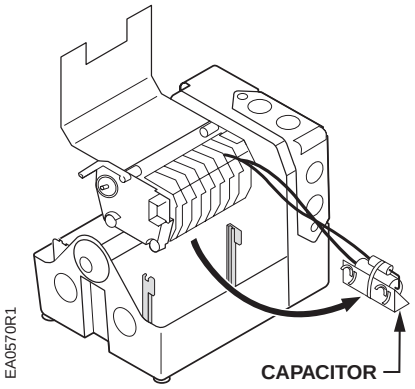

Figure 18.

CAUTION:

Do not disconnect any capacitor wiring.

AGA56.41/42/43 Circuit Board Installation

1. Remove the AGA56.41/42/43… circuit board from the packaging. The circuit board is shipped as one board.
2. Separate the board at the perforation by holding the circuit board at both ends and gently bending the board until it separates.
3. Move the terminal section containing the auto/manual switch to the opposite end of the base circuit board.
4. From the switch housing side of the actuator, guide the base circuit board into the bottom of the circuit board mounting bracket. See Figure 19.

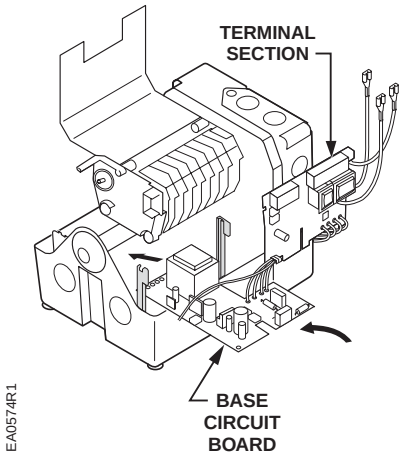

Figure 19.

AGA56.41/42/43 Circuit Board Installation, Continued

5. Re-install the actuator motor capacitor. See Figure 20.

6. Gently guide the terminal section into the support slots and slide the terminal board downward until both supports snap into place. Ensure that the four brown wires and the flat white connector cable which connect the two circuit boards are positioned correctly in their respective corners allowing the board to freely slide into place without pinching either wire. See Figure 21.

7. Connect the bundled blue, black and brown potentiometer wires to the terminal block located on the ASZ… potentiometer circuit board. See *Potentiometer Installation*.

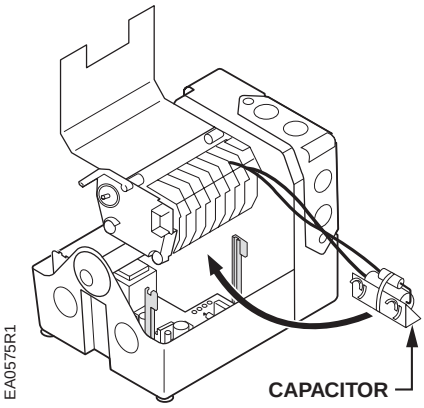

Figure 20.

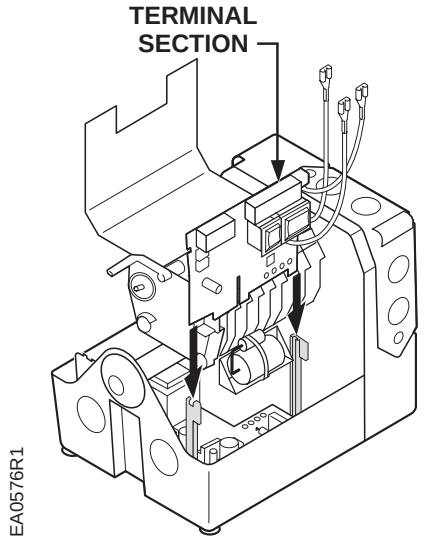

Figure 21.

AGA56.41/42/43 Circuit Board Installation, Continued

8. Make the following connections to the actuator: See Figure 22.
   a. Connect the wire, marked “1” from the circuit board to switch I, terminal 1.
   b. Connect the wire, marked “2” from the circuit board to switch II, terminal 2.
   c. Connect the wire, marked “3” from the circuit board to switch III, terminal 3.
   d. Connect the wire, marked “13” from the circuit board to switch III, terminal 13.
   e. Connect the blue neutral wire marked “N” to the double terminal block located on the outer end of the switch housing
   f. Connect the grounding wire marked "51" to the ground terminal located to the right of the auto/manual switch.

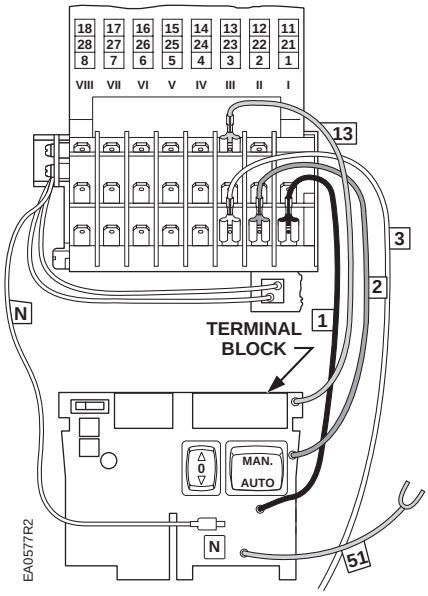

Figure 22.

AGA56.9A… Circuit Board Installation

1. Remove the ASZ... potentiometer if already installed on the SQM5... actuator. See *Potentiometer Removal/Installation Instructions*.

2. Remove the AGA56.9A… circuit boards from the packaging. The three separate AGA56.9A circuit boards are shipped in a circuit board mounting bracket.

3. Remove the two upright circuit boards from the mounting bracket by gently pulling aside the vertical supports and sliding the boards upward. Remove the base circuit board from the bottom of the mounting bracket. Discard the shipping mounting bracket.

AGA56.9A… Circuit Board Installation, Continued

4. Guide the base circuit board from the switch housing side of the actuator into the bottom of the circuit board mounting bracket. See Figure 23.

5. Re-install the actuator motor capacitor. See Figure 24.

6. Gently guide the terminal board into the support slots and slide the terminal board downward until both supports snap into place. See Figure 25.

7. See Figure 26 and make the following connections to the actuator:

   a. Connect the wire, marked “1” from the circuit board to switch I, terminal 1.

   b. Connect the wire, marked “2” from the circuit board to switch II, terminal 2. Connect the white wire, marked “3” from the circuit board to switch III, terminal 3.

   c. Connect the wire, marked “13” from the circuit board to switch III, terminal 13.

   d. Connect the neutral wire, marked “N” to the double terminal block located on the outer end of the switch housing.

   e. Connect the grounding wire marked "51" to the ground terminal located to the right of the auto/manual switch.

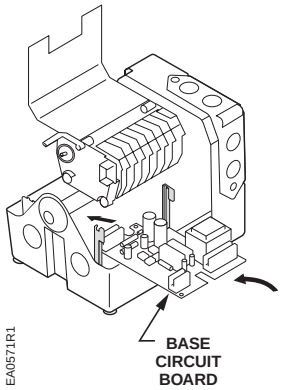

Figure 23.

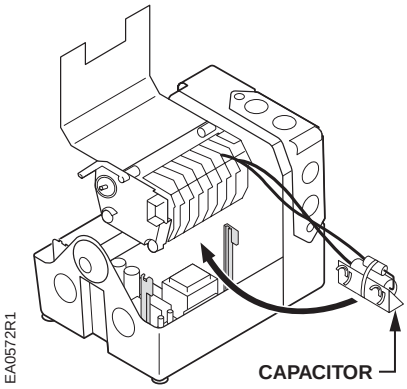

Figure 24.

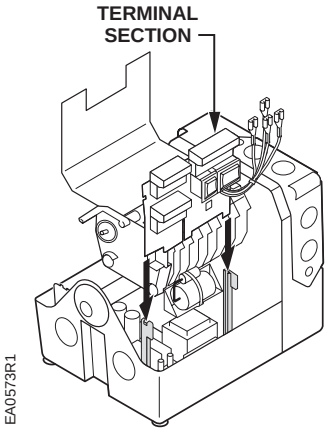

Figure 25.

AGA56.9A… Circuit Board Installation, Continued

8. Gently guide the L-shaped circuit board containing the three blue trim potentiometers into the vertical support slots located on the cam drum side of the actuator. See Figure 27.

9. Slide the circuit board downward until both supports snap into place. Install the ASZ… potentiometer. (See *Potentiometer Removal/Installation Instructions.*)

10. Connect the bundled blue, black and brown potentiometer wires to the terminal block located on the ASZ… potentiometer circuit board.

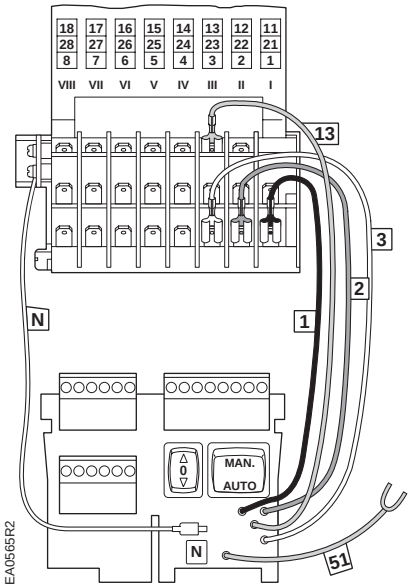

Figure 26.

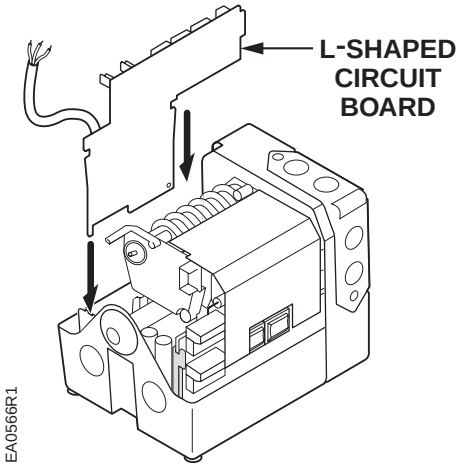

Figure 27.

AGA56.1A97 Circuit Board Installation

1. Install the AGA56.1A97 circuit board into the two slotted circuit board supports located on the switch housing side of the actuator.

2. Gently guide the AGA56.1A97 circuit board into the support slots and slide the board downward until both supports snap into place.

3. Make the following connections to the actuator:
   a. Connect the wire, marked “1” from the circuit board to switch I, terminal 1.
   b. Connect the wire, marked “2” from the circuit board to switch II, terminal 2.
   c. Connect the wire, marked “13” from the circuit board to switch III, terminal 13.

Potentiometer Removal

9. Remove the white plastic actuator position-indicating dial by gently pulling while rotating in the clockwise direction. See Figure 6.

10. Disconnect the blue, black and brown wire from the potentiometer terminal block. See Figure 17.

11. Remove the silver potentiometer alignment screw.

12. Loosen the black potentiometer cam attachment screw approximately one turn.

13. Gently wedge a small screwdriver between the potentiometer and the gray plastic housing.

14. Carefully twist the screwdriver until the potentiometer releases from the cam drum shaft. Remove the ASZ… potentiometer.

Potentiometer Installation

1. Install the new ASZ… potentiometer by gently sliding the bushing over the cam drum shaft.

2. Align the potentiometer alignment screw hole with the hole in the gray plastic housing and install the potentiometer alignment screw. See Figures 17 and 17a.

3. The actuator position indicating pointer, located near the actuator gear end of the cam drum, must point to the “0” mark on the actuator position scale. See Figure 6. The scale is located on the cam drum nearest to the actuator gear end. Press and hold the black cam drum release button while manually rotating the cam drum.

4. If installing a potentiometer without gear, manually rotate the potentiometer pointer until the pointer is **exactly** in the “min” position. See Figure 17. Firmly tighten the black potentiometer cam attachment screw while manually holding the potentiometer pointer in alignment. Check the alignment again.

5. If installing a gear model potentiometer, manually rotate the potentiometer gear until the white line next to the “0” or “1” mark on the potentiometer gear face is **exactly** in alignment with the potentiometer gear alignment pointer. See Figure 17a.
   For counterclockwise (ccw) operation the line beside the “1” mark must exactly align with potentiometer gear alignment pointer. For clockwise (cw) operation the line beside the “0” mark must exactly align with potentiometer gear alignment pointer. Firmly tighten the black potentiometer cam attachment screw while manually holding the potentiometer gear in alignment. Check the alignment again.

6. Connect the bundled blue, black and brown potentiometer wires to the terminal block located on the ASZ… potentiometer board. See *Potentiometer Installation* and Figures 17 and 17a.

7. Re-install the white actuator-indicating dial by gently pressing it onto the potentiometer cam attachment screw. Align scale position “0” on the actuator position indicating dial with the dial pointer by rotating the dial in the clockwise direction to avoid loosening the potentiometer gear attachment screw. See Figure 6.

Specifications

SQM5... Reversing Actuator

SQM5... Reversing actuator	
Agency approvals	UL, CSA, CE
Operating voltage	24 Vac +10%-15% 110 Vac-15% to 120 Vac +10% 220 Vac-15% to 240 Vac +10%
Operating frequency	50 to 60 Hz
Power consumption	20 VA
Type of motor	Reversing synchronous motor
Duty cycle	100%
Torque	See Table 1.
Maximum shaft torque	
AGA58.1	90 lb-in
AGA58.2	200 lb-in
AGA58.3	220 lb-in
AGA58.4	270 lb-in
AGA58.7	400 lb-in
Timings	See Table 1.
Rotational range of operation	
SQM5x.xxxxx**A** models	0° to 160°
SQM5x.xxxxxx**3** models	0° to 90°
SQM5x.xxxxxx**4** models	0° to 135°
SQMSx.xxxxxx6 models	0° to 160°
Direction of rotation	Reversible
Shaft	Selectable. See Table 2. Custom versions on request
Shaft disengagement	Independent, cam and drive shaft
Number of auxiliary switches	4 switches (standard, maximum 6)
Limit switches	2 switches (standard)
Electrical rating of auxiliary switches	7.5 (3) A, 250 Vac
Mounting position	Optional
Ambient operating temperature	-5°F to 140°F (-20°C to 60°C)
Shipping temperature	-58°F to 140°F (-50°C to 60°C)
NEMA ratings	NEMA 1, 2, 3, 3R, 3S, 5, 12, and 13
Connections	
Switches	Spade connectors
Boards	Screwed and spade connectors
Dimensions	See Figures 28 through 31.
Weight	7.3 lb (3.3 kg)
Housing	Aluminum pressure die casting
Enclosure (cover)	Lexan
Motor	Lock resistant
Disengagements	Manual for drive and cam shaft

Specifications

SQM5... Reversing Actuator, Continued

Conduit connection	Two removable inserts with two 1/2-inch NPSM threads. Each insert allows insertion of entire cable tree for easy servicing
Gears and bearings	Maintenance-free
Mounting	Four 1/4"-20 UNC screws in bottom Face mounting at gear side also possible
Adaptation to other actuator brands	Screw pattern and shaft height Adaptation with AGA57... adapters See Table 2.

Circuit Boards

AGA56.1A97 Switch circuit board	
Operating voltage	Voltage independent
Operating frequency	50 to 60 Hz
Auto/manual switch	2-position switch
Manual toggle switch	3-position switch
Ambient operating temperature	-5°F to 140°F (-20°C to 60°C)
Shipping temperature	-58°F to 140°F (-50°C to 60°C)
Weight	0.22 lb (0.1 kg)

AGA56.41A…

AGA56.41A… Electronic circuit boards	Single potentiometer ASZ... (1000 ohm) is required
Operating voltage	24 Vac +10%-15% 110 Vac -15% to 120 Vac +10% 220 Vac -15% to 240 Vac +10%
Operating frequency	50 to 60 Hz
Ambient operating temperature	-5°F to 140°F (-20°C to 60°C)
Shipping temperature	-58°F to 140°F (-50°C to 60°C)
Input signal	4 to 20 mA
Impedance	
Current input	≤300 Ω
Zero adjustment	MIN: 0 to 75%
Span adjustment	MAX: min 100%
Auto/manual switch	2-position switch
Manual toggle switch	3-position switch
Weight	0.7 lb (0.33 kg)

AGA56.42A…

AGA56.42A… Electronic circuit boards	Same specifications as AGA56.41A except
Input signal	0 to 135 ohm
Impedance	
Current input	≤300 Ω
Voltage input	≥100K Ω

Specifications, continued

AGA56.43A…	**AGA56.43A… Electronic circuit boards**	Same specifications as AGA56.41A except:
	Input signal	0 to 10 Vdc
	Impedance	
	Voltage input	≥100K Ω
AGA56.9A	**AGA56.9A… Multi function electronic circuit boards**	Single potentiometer ASZ... (1000 ohm) is required
	Operating voltage	24 Vac +10%-15% 110 Vac -15% to 120 Vac +10% 220 Vac -15% to 240 Vac +10%
	Operating frequency	50 to 60 Hz
	Input signals	4 to 20 mA 0 to 20 mA 0 to 10 Vdc 0 to 135 ohm
	Impedance	
	Current input	≤300 Ω
	Voltage input	≥100K Ω
	Output signals	4 to 20 mA 0 to 20 mA 0 to 10 Vdc
	Max output load	
	Current output	<600 ohm
	Voltage output	> 1.5K ohm
	Zero adjustment	MIN: 0 to 75%
	Span adjustment	MAX: min-100%
	Split ranging (SHIFT)	4 to 20 mA on terminal ZF
	Input signal override (POS)	Line voltage (... Vac) on terminal P adjust with POS potentiometer
	Ambient operating temperature	-5°F to 140°F (-20°C to 60°C)
	Shipping temperature	-58°F to 140°F (-50°C to 60°C)
ASZ... Potentiometers	Auto/manual switch	2-position switch
	Manual toggle switch	3-position switch
	Weight	0.7 lb (0.33 kg)
	ASZ... Potentiometers	
	Versions	Single and double potentiometer
	Resistor values	See Table 2 and *Data Sheet 7921*.
	Hysteresis	< 0.3% related to drive shaft

Dimensions

The first dimension given is measured in inches. Millimeters are shown in parentheses.

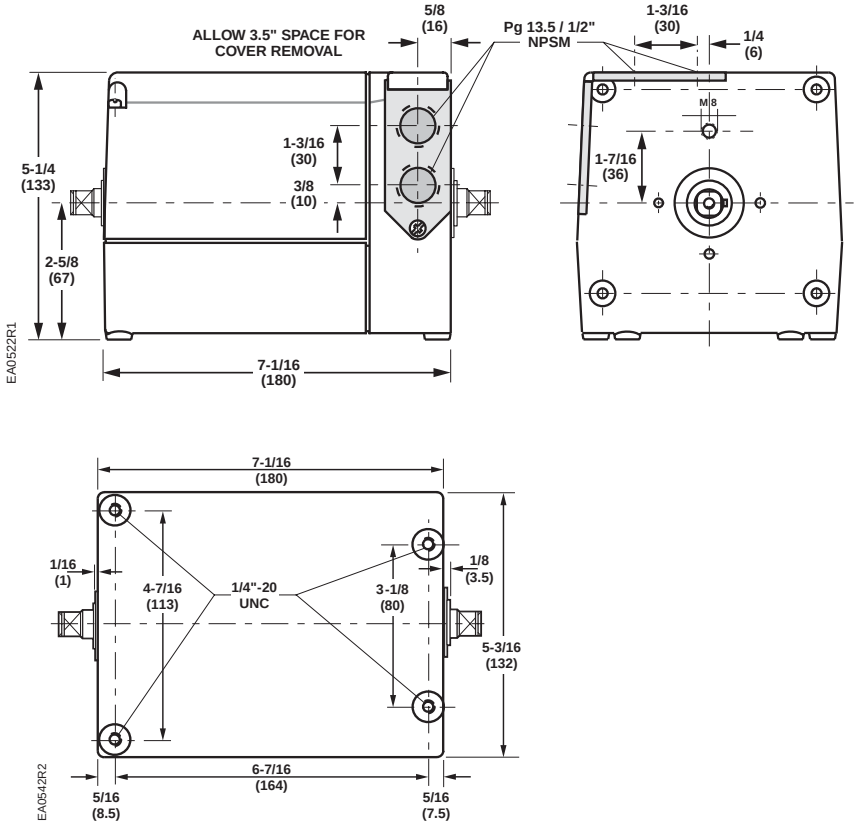

Figure 28. SQM5x.xxxRxx Dimensions.

Dimensions, Continued

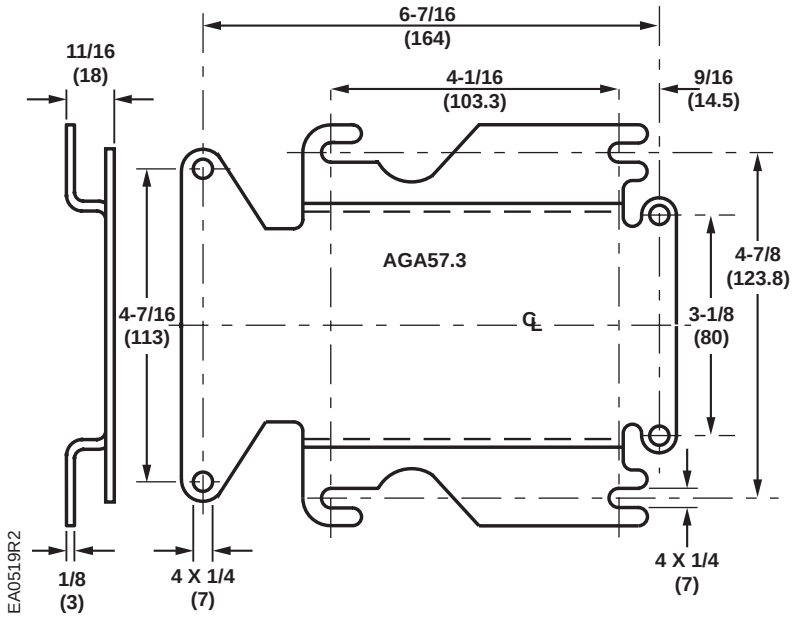

Figure 29. Mounting Bracket AGA57.3.

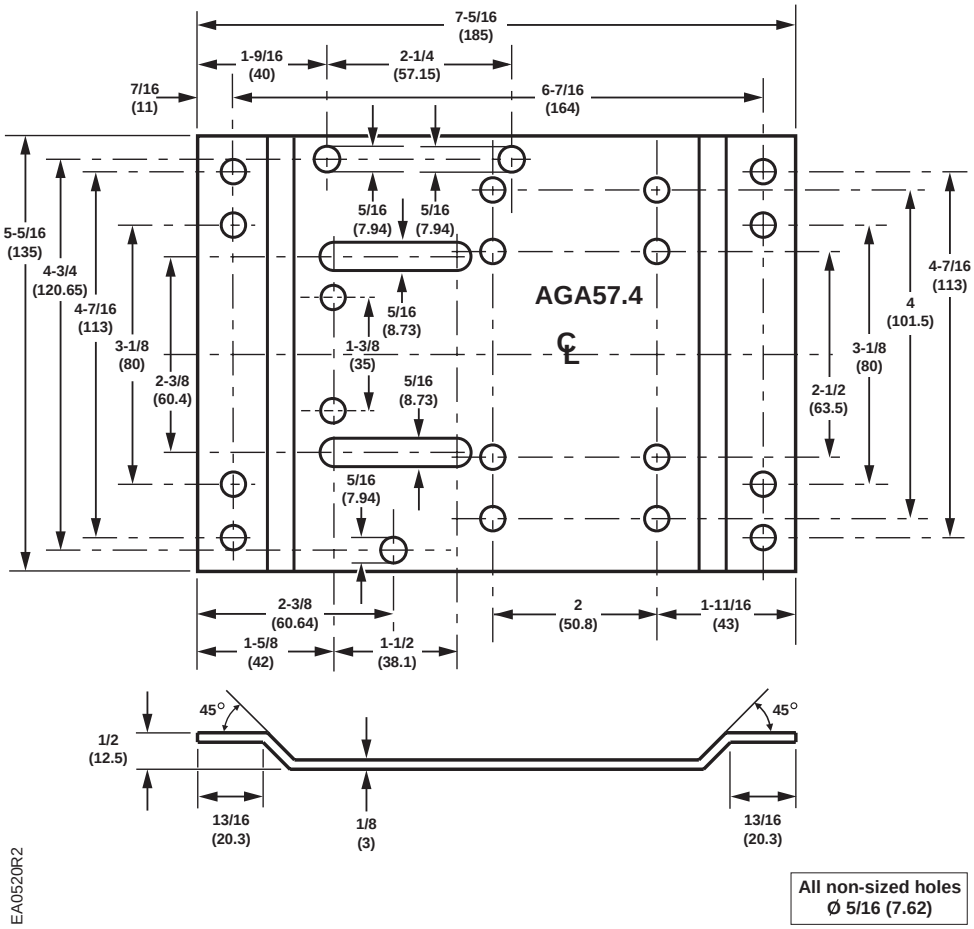

Figure 30. AGA57.4 Mounting Bracket.

Dimensions, Continued

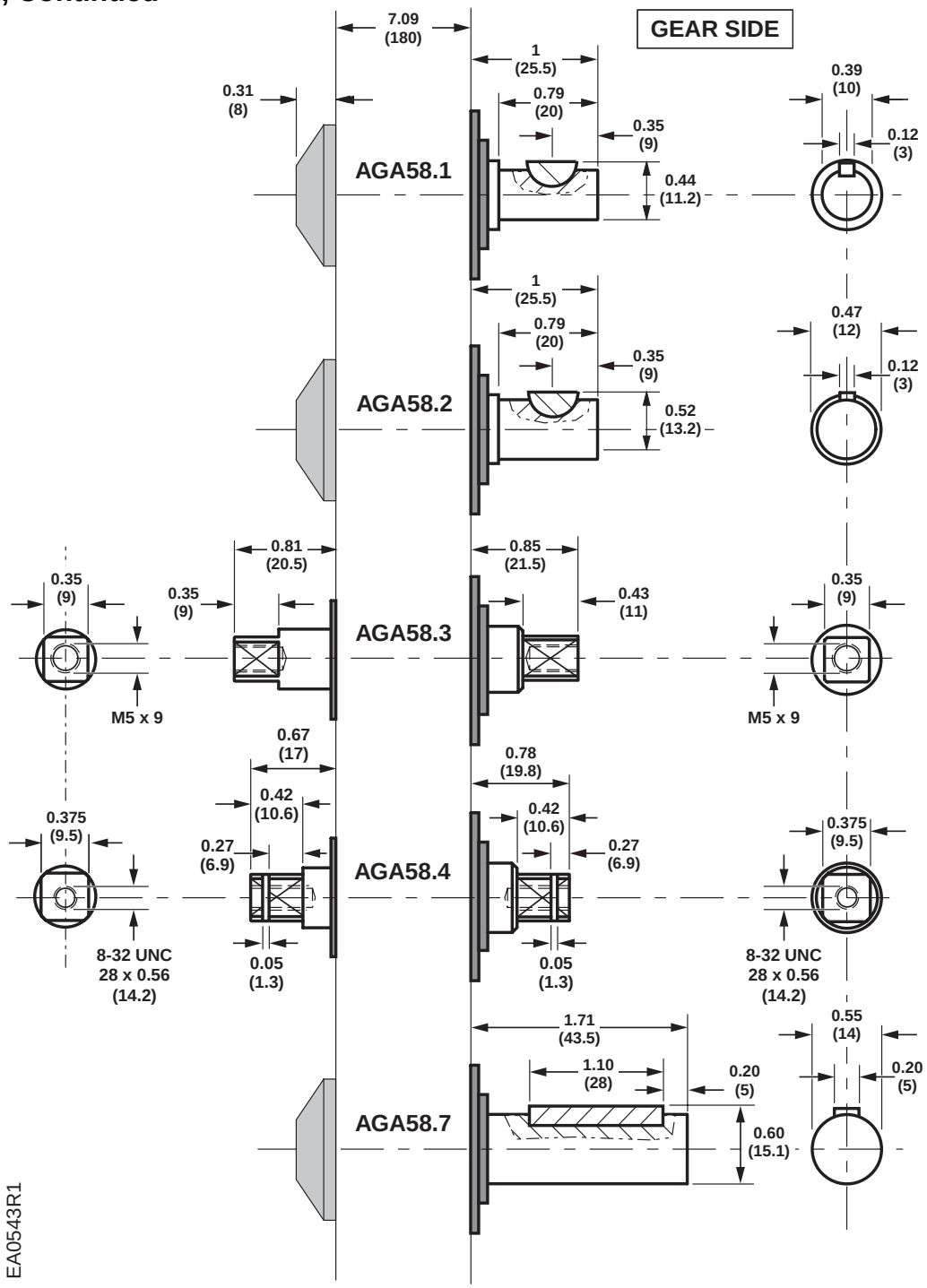

Figure 31. Shaft Dimensions.

Information in this publication is based on current specifications. The company reserves the right to make changes in specifications and models as design improvements are introduced. Other product or company names mentioned herein may be the trademarks of their respective owners.
© 2006 Siemens Building Technologies, Inc.

SIEMENS

Represented By:
POWER EQUIPMENT COMPANY
2011 Williamsburg Road
Richmond, VA 23231
Ph. 804-236-3800
Fx. 804-236-3882
www.peconet.com