SIEMENS

7842

QGO20.000D17

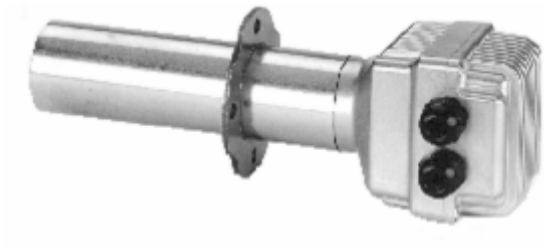

QGO20.000D27

Oxygen Sensor QGO20.000...

The QGO20... is an oxygen sensor designed for acquiring the residual oxygen content of flue gases in heat generation plant burning natural gas or light fuel oil. Together with the control unit, the QGO20... monitors and controls the combustion process.

The QGO20... and this Data Sheet are intended for use by OEMs which integrate the oxygen sensor in their products.

Use

When used in connection with burner controls type LMV52… for residual oxygen control, the efficiency of combustion will be improved and oxygen emissions minimized.

The QGO20... is suited for use on all types of heat generation plant burning natural gas or light fuel oil with flue gas temperatures up to 300 °C at the point of measurement.

Warning notes

To avoid injury to persons, damage to property or the environment, the following warning notes must be observed!

Do not open, interfere with or modify the sensor!

- All activities (mounting, installation and service work) must be performed by qualified staff
- Before making any wiring changes in the connection area, completely isolate the plant from mains supply (all-polar disconnection). Ensure that the plant cannot be inadvertently switched on again and that it is indeed dead. If not observed, there is a risk of electric shock hazard
- Ensure protection against electric shock hazard by providing adequate protection for the sensor's connection terminals
- During operation, the sensor's connecting head must stay closed and all 3 screws must be properly tightened
- Each time work has been carried out (mounting, installation, service work, etc.), check to ensure that wiring of connected lines is in an orderly state and make the safety checks as described in «Commissioning notes». Keep cables away from extremely hot plant equipment or sensor parts
- Ensure that the QGO20... does not get into contact with explosive or inflammable gases
- There is a risk of burning since the measuring cell operates at a temperature of 700 °C and certain sensor parts can become very hot (>60 °C)
- To prevent injury caused by the hot immersion tube, remove the QGO20... from the AGO20... only after the equipment has cooled down
- Fall or shock can adversely affect the safety functions and lead to dangerous conditions. Such sensors must not be put into operation, even if the measuring cell does not exhibit any damage
- Always keep the sensor's flue gas inlet and outlet free from dirt, this extended the response time of the sensor
- Before cleaning the flue gas inlet and outlet, allow the QGO20... to cool down for at least 1 hour. If compressed air is used (only permitted after the sensor has completely cooled down) the maximum permissible pressure is 0.5 bar. If this is not observed, the sensor can be damaged in a way that inadmissibly high CO concentrations in the flue gases can occur
- Ensure that air cannot enter the space between burner and measuring parts. In particular, the mounting flange must be completely gas-tight
- Always fit the sensor such that the connecting section (head plus flange) is free so that air can freely circulate. Otherwise, there is a risk of false measurements, which can lead to dangerous conditions
- The environment must be free from chemicals such as vapors from solvents
- During burner operation, QGO20... must be kept on operating temperature via associated control unit (LMV52... with PLL52...)

Engineering notes

- If the burner is shut down for no more than 2 weeks, maintain power supply to the QGO20... and the associated control unit (LMV52... with PLL52...)
- To ensure a good response, always use the QGO20... together with the AGO20...
- The flue gas temperature at the QGO20… must not exceed 300 °C since higher temperatures can damage the sensor
- Use the QGO20... only in connection with natural gas and light fuel oil since other types of fuel can damage the sensor due to the aggressive substances contained in them
- Heavy metals in the fuel, such as lead, cadmium etc., destroy the sensor element and therefore may not be contained
- NOx, SOx and reducing atmospheres, such as CO by an incomplete burning, impair the life time of the sensor element depending on the concentration and the influence time

Installation and mounting notes

- Ensure that the relevant national safety regulations are complied with
- To facilitate mounting, the QGO20... and AGO20... carry markings (refer to Mounting Instructions M7842 (4 319 2366 0))
- The flue gas flow passing the measuring cell must be homogeneous, with no or only very little turbulence. When mounted near air dampers or pipe bends, false measurements can occur
- The exchange of fresh air with reference air via the slots near the sensor's connecting section must be ensured and must not be covered (by insulation or similar)
- The sensor should not be exposed to aggressive gases (NOx, etc.). This applies to both the gas and air side since aggressive gases can drastically shorten the sensor's life
- Disturbances can distort the measurements (this can lead to dangerous conditions in connection with O2 trim control):
  – If flueways are not tight, false air can join the flue gases. In that case, the oxygen content acquired by the sensor is above the real content
  – When flue gas velocities are low, the sensor will respond more slowly since the flue gases need more time to pass the measuring cell. In that case, it is recommended to mount the sensor in an inclined position
  – The further the sensor is mounted from the flame, the longer the dead time

Note: For details on mounting, refer to Mounting Instructions M7842 (4 319 2366 0).

Electrical connection of the oxygen sensor

It is important to achieve practically disturbance- and loss-free signal transmission:

- Never run the sensor cable together with other cables; use a separate cable
- Observe the permissible length of the sensor cables and the relevant specification (refer to «Technical data»)

Commissioning notes

- To prevent the collection of condensate inside the QGO20…, do not put the burner into operation before the sensor's heating up phase is completed
- To prevent false measurements, observe a heating up time of at least 2 hours when commissioning the plant, otherwise at least 1 hour

Note: For details on commissioning the QGO20..., refer to Basic Documentation P7842.

Standards and certificates

ISO 9001: 2000
Cert. 00739

ISO 14001: 2004
Cert. 38233

Only QGO20.000D17

Only in connection with LMV52... with PLL52...

Conformity to EEC directives

- Electromagnetic compatibility EMC (immunity)	2004/108EC
- Directive for gas-fired appliances	90/936/EEC

Service notes

- Always keep the sensor's flue gas inlet and outlet free from dirt
- On each service visit, check to ensure that the flange is completely tight and replace gasket if necessary
- Check the AGO20… flue gas collector at regular intervals and clean if necessary
- After cleaning and heating up, check oxygen measurement and control in the burner's entire working range

Note

For details on servicing the QGO20..., refer to Basic Documentation P7842.

Disposal notes

The oxygen sensor contains electrical and electronic components and must not be disposed of together with household waste.
Local and currently valid legislation must be observed.

Mechanical design

The **QGO20...** consists of
- sensor tube with mounting flange made of stainless steel, and
- connecting head made of die-cast aluminium

The **sensor tube** contains and protects
- the measuring cell
- the cell heating element, and
- is resistant to aggressive substances contained in the flue gases of combustion plant burning natural gas or light fuel oil

The sensor's **connecting head** houses a printed circuit board with the connection terminals. The cable enters through replaceable Pg11 cable glands. The cable glands can be left with the cable, thus facilitating installation and service work.

The AGO20... **flue gas collector** is one of the accessory items used with the QGO20...
- which is welded into the stack where the measurement shall be made, also serving as a
- mounting flange and
- flue gas guidance

Oxygen sensor (including flange gasket)

- AC 230 V	**QGO20.000D27**
- AC 120 V	**QGO20.000D17**

Control unit for measurement and control the rest of oxygen

- Refer to Basic Documentation P7550	**LMV52...** with **PLL52...**

Flue gas collectors

- For stack diameters up to 400 mm	**AGO20.001A**
- For stack diameters above 400 mm	**AGO20.002A**

Flange gasket for service	**5 769 2021 0**

Technical data

QGO20...	Mains voltage for heating the measuring cell - QGO20.000D27 - QGO20.000D17	 AC 230 V ±15 % AC 120 V ±15 % (only with LMV52... and PLL52...)
	Mains frequency	50...60 Hz ±6 %
	Power consumption	Max. 90 W, typically 35 W (controlled)
	Perm. mounting position	Refer to Mounting Instructions M7842 (4 319 2366 0)
	Degree of protection	IP40 (to be ensured through mounting)
	Weight	Approx. 0.9 kg
	Signal lines - Shielded 6-core cable - Shielding connected to terminal «GND» of the PLL52...	 Twisted pairs
	- Proposal for cable	LifYCY6x2x0.2 or LYCY6x2x0.2
	Measuring principle	Zirconium dioxide measuring cell as an oxygen ion conductor
	Perm. flow rate of flue gas (only with the AGO20...)	1...10 m/s
	Perm. types of fuel	Light fuel oil «EL», natural gas «H»
	Measuring range	0.2...20.9 % O_2
	Perm. cable length	Max. 100 m
	Recommended cable length	<10 m
	Power supply lines (mains cable) - Wire dia.	 Min. 1 mm² (e.g. NYM 3x1.5)
	Required operating temperature of measuring cell	700 °C ±50 °C

Environmental conditions	**Storage**	DIN EN 60721-3-1
	Climatic conditions	Class 1K3
	Mechanical conditions	Class 1M2
	Temperature range	-20...+60 °C
	Humidity	<95 % r.h.
	Transport	DIN EN 60721-3-2
	Climatic conditions	Class 2K2
	Mechanical conditions	Class 2M2
	Temperature range	-25...+70 °C
	Humidity	<95 % r.h.
	Operation	DIN EN 60721-3-3
	Climatic conditions	Class 3K5
	Mechanical conditions	Class 3M2
	Temperature range - Flange - Connecting head - Flue gas	 Max. 250 °C Max. 70 °C ≤300 °C
	Humidity	<95 % r.h.

Condensation, formation of ice and ingress of water are not permitted!

AGO20...	Tube	DN50, steel X5 CrNi 18 9
	Tube length - For the AGO20.001A - For the AGO20.002A	 180 mm 260 mm
	Flange	DN50, steel X5 CrNi 18 9

Function

A difference of oxygen concentrations between measured gas and the reference gas at the measuring cell generates a voltage, which is used as a signal for the control unit.
The measuring cell is made of zirconium dioxide (ZrO_2). As ZrO_2 becomes oxygen ion-conductive at high temperatures, the difference between the O_2 concentrations inside and outside the measuring cell generates an electrical voltage.
This so-called Nernst voltage «VN» is acquired by porous platinum electrodes located on the inner and outer sides of the measuring cell. A heating element keeps the measuring cell at a constant working temperature of 700 °C. The flue gas enters the gas guidance chamber from the bottom of the sensor tube and passes the space between the outside of the measuring cell and the gas guidance in 1 to 2 seconds, then leaving laterally through the sensor tube. The inside of the measuring cell, which is hermetically sealed against the ingress of flue gases, communicates with the outside air which is used as the reference gas when making measurements (20.9 % O_2).

The Nernst voltage «VN» is a function of the oxygen content differential and the temperature of the measuring cell as expressed by the following formula:

$$V_N = \frac{R \times T}{4 \times F} \ln \frac{O_{2\text{-Ref.}}}{O_2} = (\text{mV})$$

$$\text{when} = \frac{R}{4 \times F} = 21.5 \ \frac{\mu V}{K} \ \text{or}$$

$$\frac{R \times T}{4 \times F} = 20.9 \text{ mV for } T = 700\ °C = 973\ K$$

According to the above formula, the Nernst voltage at an oxygen concentration of 1 % in the flue gas is 64 mV.

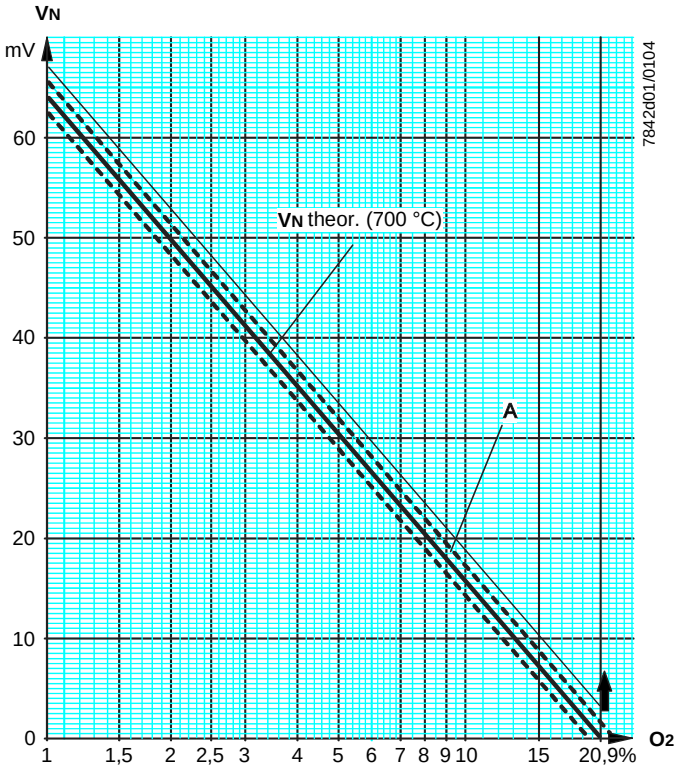

Legend

A	Tolerance range	(O_2)	Oxygen content (vol. %) of flue gas
F	Faraday constant (96486 Clb)	R	Gas constant (8.3 J/K)
(O_2)Ref	Oxygen content (vol. %) inside the measuring cell (reference gas)	T	Absolute temperature of measuring cell (973 K)
		VN	Nernst voltage

Connection diagram

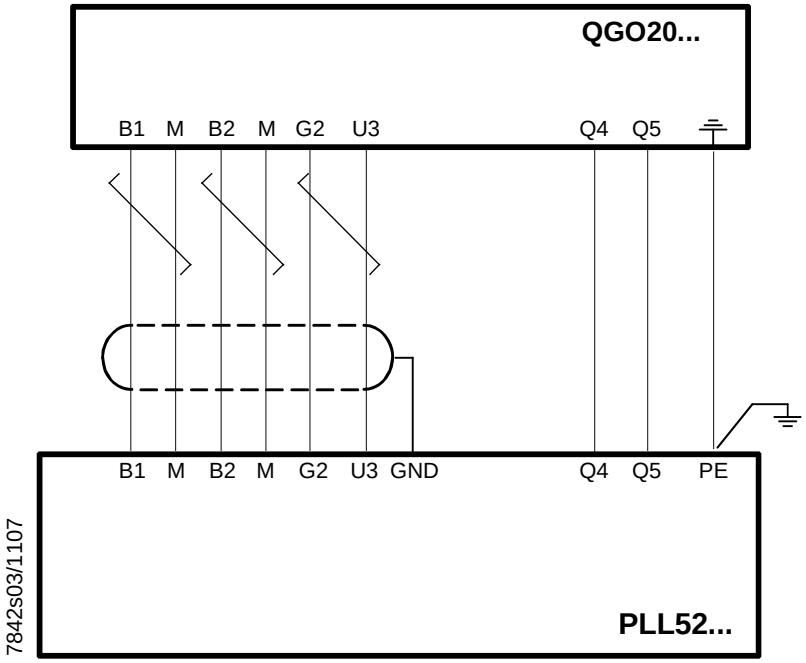

Legend

B1	(+)	Signal of oxygen measuring cell
B2	(+)	Thermocouple voltage
G2	(-)	Power supply temperature compensation element
GND		Electrical ground for shielding
M	(-)	Electrical ground for «B1» and «B2»
M	(-)	
Q4		Sensor heating with mains connection
Q5		Sensor heating with mains connection
U3	(+)	Signal of temperature compensation element
⏚		Protective earth (PE)

Dimensions in mm

QGO20.000D27

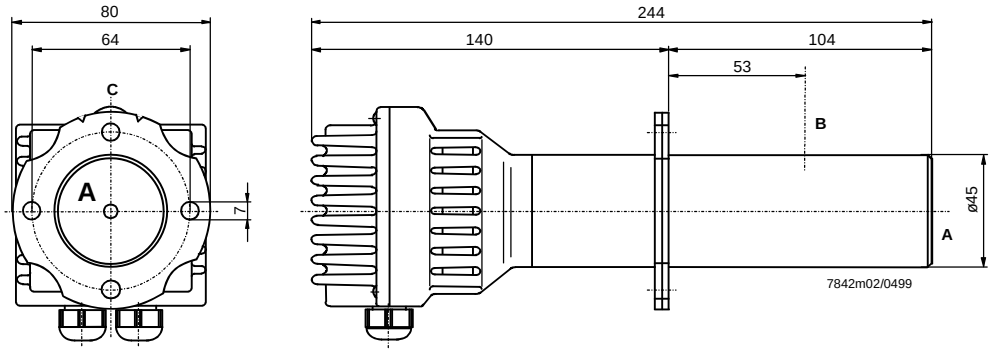

QGO20.000D17

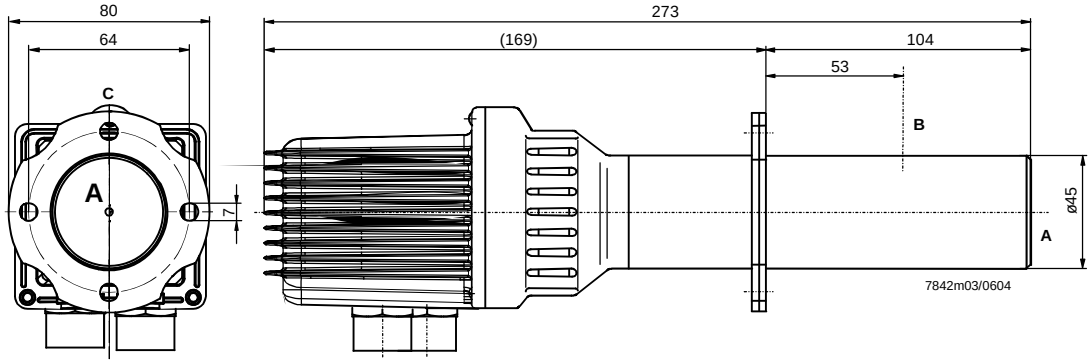

AGO20...

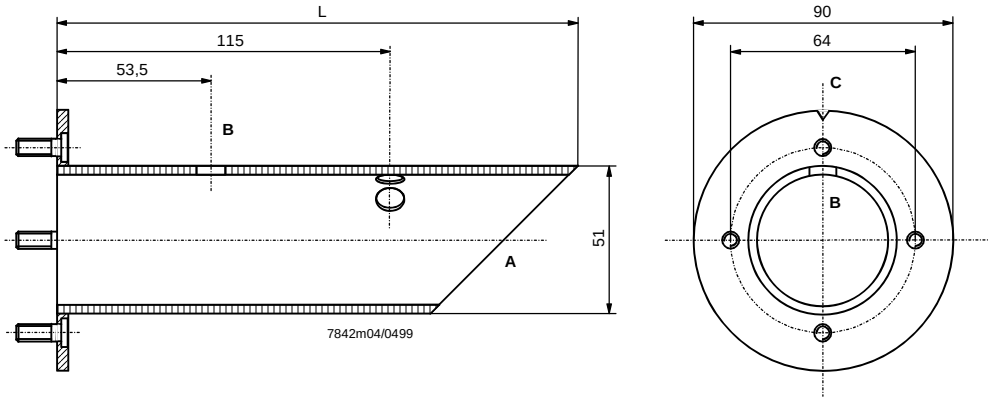

Legend

A	Flue gas inlet
B	Flue gas outlet
C	Notch on the flange marking the flue gas outlet side
L	180 mm for the AGO20.001A 260 mm for the AGO20.002A

©2008 Siemens Building Technologies HVAC Products GmbH
Subject to change!