Instruction Manual

EXAxt

Model ZR22G, ZR402G
Separate type
Zirconia Oxygen Analyzer

IM 11M12A01-02E

YOKOGAWA
Yokogawa Electric Corporation

IM 11M12A01-02E
3rd Edition

Introduction

The EXAxtZR Separate type Zirconia Oxygen Analyzer has been developed for combustion control in various industrial processes. This analyzer basically consists of a detector and a converter. You can select between several versions, based upon your application.

Optional accessories are also available to improve measurement accuracy and automate calibration. An optimal control system can be realized by adding appropricate options.

This instruction manual refers to almost all of the equipment related to the EXAxtZR. You may skip any section(s) on the equipment which is not included in your system.

Regarding the HART communication protocol, refer to IM 11M12A01-51E.

IM 11M12A01-51E has been published as ″ Model EXAxt ZR Series HART Protocol″ .

The all-in-one version (with sensor and analyzer integrated in one body) is described in IM 11M12A01-04E

<Before using the equipment, please read any descriptions in this manual related to the equipment and system that you have, on appropriate use and operation of the EXAxtZR.>

Models and descriptions in this manual are as follows:

Models and descriptions in this manual

Model	Product Name	Description in this manual				
		Specification	Installation	Operation	Maintenance	CMPL
ZR22G	General-use detector	○	○	○	○	○
ZR22G	High-temperature detector (0.15m)	○	○	○	○	
ZR402G	Converter	○	○	○	○	○
ZO21R-L	Probe protector	○	○			
ZO21P-H	High-temperature probe adapter	○	○			○
ZA8F	Flow setting unit (for manual calibration use)	○	○	○		
ZR40H	Automatic Calibration unit	○	○	○		○
-	Auxiliary ejector for high-temperature use (Part No. E7046EC, EN)	○	○			○
-	Calibration gas unit case (Part No. E7044KF)	○	○			
-	Check valve (Part No. K9292DN, K9292DS)	○	○			
-	Dust filter for the detector (Part No. K9471UA)	○	○			
ZO21S	Standard gas unit	○		○	○	○

T.Int.1E

CMPL : Customer Maintenance Parts List

IM 11M12A01-02E
3rd Edition: Sept. 2001 (YK)
All Rights Reserved, Copyright © 2000, Yokogawa Electric Corporation

This manual consists of twelve chapters. Please refer to the reference chapters for installation, operation and maintenance.

Table of Contents

Chapter	Outline	Relates to		
		Installation	Operation	Maintenance
1. Overview	Equipment models and system configuration examples	○	△	○
2. Specifications	Standard specification, model code (or part number), dimension drawing for each equipment	◎	○	○
3. Installation	Installation method for each equipment	◎		△
4. Piping	Examples of piping in three standard system configurations	◎		△
5. Wiring	Wiring procedures such as “Power supply wiring”, “output signal wiring” or others	◎		△
6. Components	Major parts and function are described in this manual	△	○	○
7. Startup	Basic procedure to start operation of EXAxtZR. Chapter 7 enables you to operate the equipment immediately.		◎	△
8. Detailed Data Setting	Details of key operations and displays		○	△
9. Calibration	Describes the calibration procedure required in the course of operation.		○	△
10. Other Functions	Other functions described		○	△
11. Inspection and Maintenance	How to conduct maintenance of EXAxtZR and procedures for replacement of deteriorated parts		○	◎
12. Troubleshooting	This chapter describes measures to be taken when an abnormal condition occurs.		△	◎
CMPL (parts list)	User replaceable parts list		△	○

T.Int.2E

◎ : Read and completely understand before operating the equipment.
○ : Read before operating the equipment, and refer to it whenever necessary.
△ : Recommended to read it at least once.

◆ For the safe use of this equipment

CAUTION

The cell (sensor) at the tip of the detector is made of ceramic (zirconia element). Do not drop the detector or subject it to pressure stress.

- Do NOT allow the sensor (probe tip) to make contact with anything when installing the detector.
- Avoid any water dropping directly on the probe (sensor) of the detector when installing it.
- Check the calibration gas piping before introducing the calibration gas to ensure that there is no leakage of the gas. If there is any leakage of the gas, the moisture drawn from the measured gas may damage the sensor.
- The detector (especially at the tip) becomes very hot. Be sure to handle it with gloves.

DANGER

EXAxtZR is very heavy. Handle it with care. Do not drop it. Handle safely to avoid injury.

Connect the power supply cord only after confirming that the supply voltage matches the rating of this equipment. In addition, confirm that the power is switched off when connecting power supply.

Some process gas is dangerous to people. When removing this equipment from the process line for maintenance or other reasons, protect yourself from potential poisoning by using a protective mask or ventilating the area well.

(1) About This Manual

- This manual should be passed on to the end user.
- The contents of this manual are subject to change without prior notice.
- The contents of this manual shall not be reproduced or copied, in part or in whole, without permission.
- This manual explains the functions contained in this product, but does not warrant that those will suit the particular purpose of the user.
- Every effort has been made to ensure accuracy in the preparation of this manual. However, should any errors or omissions come to the attention of the user, please contact the nearest Yokogawa Electric representative or sales office.
- This manual does not cover the special specifications. This manual may not be changed on any change of specification, construction and parts when the change does not affect the functions or performance of the product.
- If the product is used in a manner not specified in this manual, the safety of this product may be impaired.

(2) Safety and Modification Precautions

- Follow the safety precautions in this manual when using the product to ensure protection and safety of personnel, product and system containing the product.

(3) The following safety symbols are used on the product as well as in this manual.

DANGER

This symbol indicates that the operator must follow the instructions laid out in this manual in order to avoid the risk of personnel injury electric shock, or fatalities. The manual describes what special care the operator must exercise to avoid such risks.

WARNING

This symbol indicates that the operator must refer to the instructions in this manual in order to prevent the instrument (hardware) or software from being damaged, or a system failure from occurring.

CAUTION

This symbol draws attention to information essential for understanding the operation and functions.

Tip

This symbol gives information that complements the present topic.

SEE ALSO

This symbol identifies a source to which to refer.

Protective Ground Terminal

Function Ground Terminal (Do not use this terminal as the protective ground terminal.)

Alternating current

• Special descriptions in this manual

This manual indicates operation keys, displays and drawings on the product as follows:

• Operation keys, Enclosed in [ ], displays on the panel ″ ″.

(Ex. [MODE] key)

(Ex. message display ⟶ ″ BASE ″)

(Ex. data display ⟶ ″ 102″ lit, ″ <u>102</u>″ flashing)

• Drawing for flashing

Indicated in light print. (Flashing) (lit)

◆ NOTICE

• Specification check
When the instrument arrives, unpack the package with care and check that the instrument has not been damaged during transportation. In addition, please check that the specification matches the order, and required accessories are not missing. Specifications can be checked by the model codes on the nameplate. Refer to Chapter 2 Specifications for the list of model codes.

• Details on operation parameters
When the EXAxt ZR Separate type Oxygen Analyzer arrives at the user site, it will operate based on the operation parameters (initial data) set befor shipping from the factory.
Ensure that the initial data is suitable for the operation conditions before conducting analysis. Where necessary, set the instrument parameters for appropriate operation.
For details of setting data, refer to chapters 7 to 10.
When user changes the operation parameter, it is recommended to note down the changed setting data.

◆ After - Sales Warranty

● Yokogawa warrants the product for the period stated in the quotation which was delivered upon purchase. Yokogawa shall conduct defined warranty service based on its standard. When the customer site is located out of the specified scope, a fee for dispatching the maintenance engineer will be charged to the customer.

● In the following cases, customer will be charged repair fee regardless of warranty period.

• Failure of components which are out of scope of warranty stated in instruction manual.

• Failure caused by usage of software, hardware or auxiliary equipment, which Yokogawa Electric Corporation did not supply.

• Failure due to improper or insufficient maintenance by user.

• Failure due to modification, misuse or operation of specification which Yokogawa does not authorize.

• Failure due to power supply (voltage, frequency) being outside specifications or abnormal.

• Failure caused by any usage out of scope of recommended usage
• Any damage from fire, earthquake, a storm and flood, lightning, disturbance, riot, warfare, radiation and other natural changes.

● Yokogawa does not warrant conformance with the specific application at the user site. Yokogawa will not bear direct/indirect responsibility for damage due to a specific application.

● Yokogawa Electric Corporation will not bear responsibility when the user configures the product into systems or resells the product.

● Maintenance service and supplying repair parts will be covered for five years after the production ends. For repair this product, please contact the nearest sales office described in this instruction manual.

Contents

Introduction ..... **i**

◆ For the safe use of this equipment iii
◆ NOTICE vi
◆ After - Sales Warranty vi

1. Overview **1-1**

1.1 < EXAxtZR > System Configuration 1-1
1.1.1 System 1 1-1
1.1.2 System 2 1-2
1.1.3 System 3 1-3
1.2 < EXAxtZR > System Components 1-4
1.2.1 System Components 1-4
1.2.2 Detectors and Accessories 1-4

2. Specifications **2-1**

2.1 General Specifications 2-1
2.1.1 Standard Specifications 2-1
2.2 General-use Separate-type Detector and Related Equipment 2-3
2.2.1 ZR22G General-use Separate-type Detector 2-3
2.2.2 ZO21R-L Probe Protector 2-8
2.3 High-Temperature Separate-type Detector and Related Equipment 2-9
2.3.1 ZR22G (0.15m) High-Temperature Separate-type Detector 2-9
2.3.2 ZO21P-H Adapter for High-Temperature Probe 2-10
2.4 ZR402G Separate-type Converter 2-12
2.4.1 Standard Specification 2-12
2.4.2 Functions 2-13
2.5 ZA8F Flow Setting Unit and ZR40H Automatic Calibration Unit 2-17
2.5.1 ZA8F Flow Setting Unit 2-17
2.5.2 ZR40H Automatic Calibration Unit 2-19
2.6 ZO21S Standard Gas Unit 2-22
2.7 Other Equipment 2-24
2.7.1 Dust Filter for the Detector (Part No.: K9471UA) 2-24
2.7.2 Auxiliary Ejector for High Temperature (Part No. E7046EC or E7046EN) 2-25
2.7.3 Stop Valve (Part No. L9852CB or G7016XH) 2-27
2.7.4 Check Valve (Part No. K9292DN or K9292DS) 2-28
2.7.5 Air Set (Part No. G7011XF or E7040EL) 2-29
2.7.6 Zero Gas Cylinder (Part No. G7001ZC) 2-29
2.7.7 Cylinder Regulator Valve (Part No. G7013XF or G7014XF) 2-30
2.7.8 Calibration Gas Unit Case (Part No. E7044KF) 2-30
2.7.9 Model ZR22A Heater Assembly 2-31

3. Installation 3-1
3.1 Installation of the Detector 3-1
3.1.1 Location 3-1
3.1.2 Probe Insertion Hole 3-1
3.1.3 Installation of the Detector 3-2
3.1.4 Installation of the Dust Filter(Part No K9471UA) 3-3
3.2 Installation of the Detector (Model ZR22G-015) 3-5
3.2.1 Installation Location 3-5
3.2.2 Usage of the High-temperature Probe Adapter (Model ZO21P-H) 3-5
3.2.3 Probe Insertion Hole 3-7
3.2.4 Mounting of the High-Temperature Detector 3-7
3.3 Installation of the Converter 3-9
3.3.1 Location 3-9
3.3.2 Mounting of the Converter 3-9
3.4 Installation of ZA8F Flow Setting Unit 3-12
3.4.1 Location 3-12
3.4.2 Mounting of ZA8F Flow Setting Unit 3-12
3.5 Installation of ZR40H Automatic Calibration Unit 3-14
3.5.1 Location 3-14
3.5.2 Mounting of ZR40H Automatic Calibration Unit 3-14
3.6 Installation of the Calibration Gas Unit Case (E7044KF) 3-16
3.6.1 Location 3-16
3.6.2 Mounting 3-16
3.7 Insulation Resistance Test 3-17
3.8 External Dimensions of Detectors with Pressure Compensation 3-18

4. Piping 4-1
4.1 Piping for System 1 4-1
4.1.1 Parts Required for Piping in System 1 4-2
4.1.2 Connection to the Calibration Gas Inlet 4-3
4.1.3 Connection to the Reference Gas Inlet 4-3
4.1.4 Piping to the High-temperature Probe Adapter 4-4
4.2 Piping for System 2 4-6
4.2.1 Piping Parts for System 2 4-7
4.2.2 Piping for the Calibration Gas 4-8
4.2.3 Piping for the Reference Gas 4-8
4.2.4 Piping to the High-temperature Probe Adapter 4-8
4.3 Piping for System 3 4-9
4.3.1 Blow Back Piping 4-10
4.4 Piping for the Detector with Pressure Compensation 4-12
4.4.1 Piping Parts for a System using Detector with Pressure Compensation4-14
4.4.2 Piping for the Calibration Gas 4-14
4.4.3 Piping for the Reference Gas 4-14

5. Wiring 5-1
5.1 General 5-1
5.1.1 Terminals for the External Wiring in the Converter 5-2
5.1.2 Wiring 5-3
5.1.3 Mounting of Cable Gland 5-4
5.2 Wiring for Detector Output 5-5
5.2.1 Cable Specifications 5-5
5.2.2 Connection to the Detector 5-6
5.2.3 Connection to the Converter 5-7

5.3 Wiring for Power to Detector Heater 5-8
5.3.1 Cable Specifications 5-8
5.3.2 Connection to Detector 5-8
5.3.3 Connection to Converter 5-9
5.4 Wiring for Analog Output 5-10
5.4.1 Cable Specifications 5-10
5.4.2 Wiring Procedure 5-10
5.5 Power and Grounding Wiring 5-11
5.5.1 Power Wiring 5-11
5.5.2 Grounding Wiring 5-11
5.6 Contact Output Wiring 5-12
5.6.1 Cable Specifications 5-12
5.6.2 Wiring Procedure 5-12
5.7 Wiring for ZR40H Automatic Calibration Unit 5-13
5.7.1 Cable Specifications 5-13
5.7.2 Wiring Procedure 5-14
5.8 Contact Input Wiring 5-15
5.8.1 Cable Specifications 5-15
5.8.2 Wiring Procedure 5-15

6. Components 6-1

6.1 ZR22G Detector 6-1
6.1.1 General-purpose Detector (except for Model ZR22G-015) 6-1
6.1.2 High-Temperature Detector (Model ZR22G-015) 6-2
6.2 ZR402G Converter 6-3
6.3 ZA8F Flow Setting Unit, ZR40H Automatic Calibration Unit 6-4

7. Startup 7-1

7.1 Checking Piping and Wiring Connections 7-1
7.2 Checking Valve Setup 7-1
7.3 Supplying Power to the Converter 7-2
7.4 Touchpanel Switch Operations 7-3
7.4.1 Basic Panel and Switch 7-3
7.4.2 Display Configuration (for Oxygen Analyzer) 7-4
7.4.3 Display Functions 7-5
7.4.4 Entering Numeric and Text Data 7-5
7.5 Confirmation of Converter Type Setting 7-7
7.6 Confirmation of Detector Type Setting 7-8
7.7 Selection of Measurement Gas 7-8
7.8 Output Range Setting 7-8
7.8.1 Minimum Current (4 mA) and Maximum Current (20 mA) Settings ... 7-8
7.9 Setting Display Item 7-9
7.10 Checking Current Loop 7-11
7.11 Checking Contact I/O 7-12
7.11.1 Checking Contact Output 7-12
7.11.2 Checking Calibration Contact Output 7-13
7.11.3 Checking Input Contacts 7-13
7.12 Calibration 7-14
7.12.1 Calibration Setup 7-14
7.12.2 Manual Calibration 7-15

8. Detailed Data Setting 8-1
8.1 Current Output Setting 8-1
8.1.1 Setting Minimum Current (4 mA) and Maximum Current (20 mA) 8-1
8.1.2 About Input Ranges 8-1
8.1.3 Entering Output Damping Constants 8-2
8.1.4 Selection of Output Mode 8-2
8.1.5 Default Values 8-3
8.2 Output Hold Setting 8-4
8.2.1 Definition of Equipment Status 8-4
8.2.2 Preference Order of Output Hold Value 8-5
8.2.3 Output Hold Setting 8-6
8.2.4 Default Values 8-6
8.3 Setting Oxygen Concentration Alarms 8-7
8.3.1 Alarm Values 8-7
8.3.2 Alarm Output Actions 8-7
8.3.3 Alarm Setting Procedure 8-8
8.3.4 Default Values 8-9
8.4 Output Contact Setup 8-10
8.4.1 Output Contact 8-10
8.4.2 Setting Procedure 8-10
8.4.3 Default Values 8-13
8.5 Input Contact Settings 8-14
8.5.1 Input Contact Functions 8-14
8.5.2 Setting Procedure 8-15
8.5.3 Default Values 8-15
8.6 Other Settings 8-16
8.6.1 Setting the Date-and-Time 8-16
8.6.2 Setting Periods over which Average Values Are Calculated and Periods over which Maximum and Minimum Values Are Monitored 8-16
8.6.3 Setting Fuels 8-17
8.6.4 Setting Passwords 8-22

9. Calibration 9-1
9.1 Calibration Briefs 9-1
9.1.1 Principle of Measurement 9-1
9.1.2 Calibration Gas 9-2
9.1.3 Compensation 9-3
9.1.4 Characteristic Data from a Sensor Measured During Calibration 9-4
9.2 Calibration Procedures 9-5
9.2.1 Calibration Setting 9-5
9.2.2 Default Values 9-8
9.2.3 Calibration 9-9

10. Other Functions 10-1
10.1 Display 10-1
10.1.1 Detailed Display 10-1
10.1.2 Trend Graph 10-5
10.1.3 Auto(matic) Revert Time 10-7
10.1.4 Entering Tag Name 10-7
10.1.5 Language Selection 10-7
10.2 Blowback 10-8
10.2.1 Blowback Setup 10-8

10.3 Operational Data Initialization 10-11
10.4 Reset 10-14
10.5 Handling of the ZO21S Standard Gas Unit 10-15
10.5.1 Standard Gas Unit Component Identification 10-15
10.5.2 Installing Gas Cylinders 10-16
10.5.3 Calibration Gas Flow 10-16
10.6 Methods of Operating Valves in the ZA8F Flow Setting Unit 10-19
10.6.1 Preparation Before Calibration 10-19
10.6.2 Operating the Span Gas Flow Setting Valve 10-19
10.6.3 Operating the Zero Gas Flow Setting Valve 10-20
10.6.4 Operation After Calibration 10-20

11. Inspection and Maintenance 11-1

11.1 Inspection and Maintenance of the Detector 11-2
11.1.1 Cleaning the Calibration Gas Tube 11-2
11.1.2 Replacing the Sensor Assembly 11-3
11.1.3 Replacement of the Heater Unit 11-5
11.1.4 Replacement of filter assembly 11-8
11.1.5 Replacement of O-ring 11-8
11.1.6 Cleaning the High-temperature Probe Adapter 11-8
11.2 Inspection and Maintenance of the Converter 11-9
11.2.1 Replacing Fuses 11-9
11.2.2 Cleaning 11-10
11.3 Replacing Flowmeter in ZR40H Autocalibration Unit 11-11

12. Troubleshooting 12-1

12.1 Displays and Measures to Take When Errors Occur 12-1
12.1.1 What is an Error? 12-1
12.1.2 Measures to Take When an Error Occurs 12-2
12.2 Displays and Measures to Take When Alarms are Generated 12-5
12.2.1 What is an Alarm? 12-5
12.2.2 Measures Taken When Alarms are Generated 12-6
12.3 Countermeasures When Measured Value Shows Error 12-11
12.3.1 Measured Value Higher Than True Value 12-11
12.3.2 Measured Value Lower Than True Value 12-12
12.3.3 Measurements Sometimes Show Abnormal Values 12-12

Customer Maintenance Parts List i

Revision Record i

1. Overview

The EXAxtZR Separate-type Zircon Oxygen Analyzer is used to monitor and control the oxygen concentration in combustion gases, in boilers and industrial furnaces, for wide application in industries which consume considerable energy−such as steel, electric power, oil and petrochemical, ceramics, paper and pulp, food, or textiles, as well as incinerators and medium/small boilers. It can help conserve energy in these industries. The EXAxtZR also contributes to preservation of the earth's environment in preventing global warming and air pollution by controlling complete combustion to reduce CO_2, SOx and NOx.

ZR22G Separate-type Detector uses a high-reliability Zirconia sensor, and its heater assembly can be replaced on site. The detector is mounted, for example, on the wall of a flue and can measure the gases directly.

For use in combustion gases at temperatures up to 1400°C, choose the general-use 0.15m long detector, which is combined with ZO21P-H, the high-temperature probe protector. The converter is equipped with an LCD touch screen which has various setting displays, a calibration display, oxygen concentration trend display, with easier operation and improvement of display functions. The converter is equipped with various standard functions such as measurement and calculation as well as maintenance functions including self-test. Analyzer calibration can also be fully automated− and ZR40H, an automatic calibration unit, is available. Choose the detector version which best suits your needs so that an optimal combustion control system can be obtained.

Some examples of typical system configurations are illustrated below:

1.1 < EXAxtZR > System Configuration

The system configuration should be determined by the conditions; e.g. whether calibration is to be automated, and whether flammable gas is present and requires safety precautions. The system configuration can be classified into three basic patterns as follows:

1.1.1 System 1

This is the simplest system consisting of a detector and a converter. This system can be implemented for monitoring oxygen concentration in the combustion gases of a package boiler. No piping is required for the reference gas (air) which is fed in at the installation site. The handy ZO21S standard gas unit is used for calibration.

Zero gas from this unit and span gas (air) is sent to the detector through a tube which is connected during calibration. A needle (stop) valve should be connected to the calibration gas inlet of the detector. The valve should be fully closed unless calibration is in progress.

CAUTION

- **As this system uses ambient air for the reference gas, measuring accuracy will be affected by the installation location.**

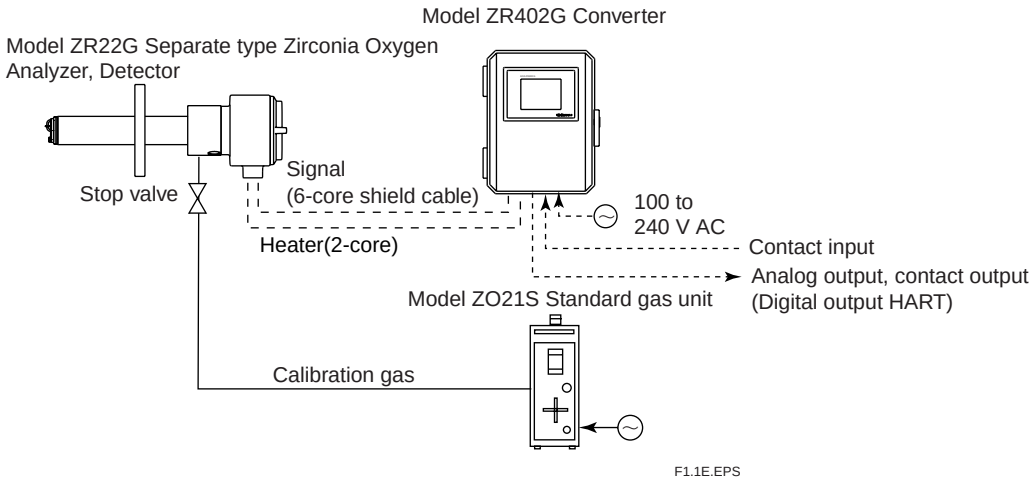

Figure1.1

1.1.2 System 2

This system is for monitoring and controlling oxygen concentration in the combustion gases of a large-size boiler or heating furnace. Clean (dry) air (21% O_2) is used as the reference gas and the span gas for calibration. Zero gas is fed in from a cylinder during calibration. The gas flow is controlled by the ZA8F flow setting unit (for manual valve operation).

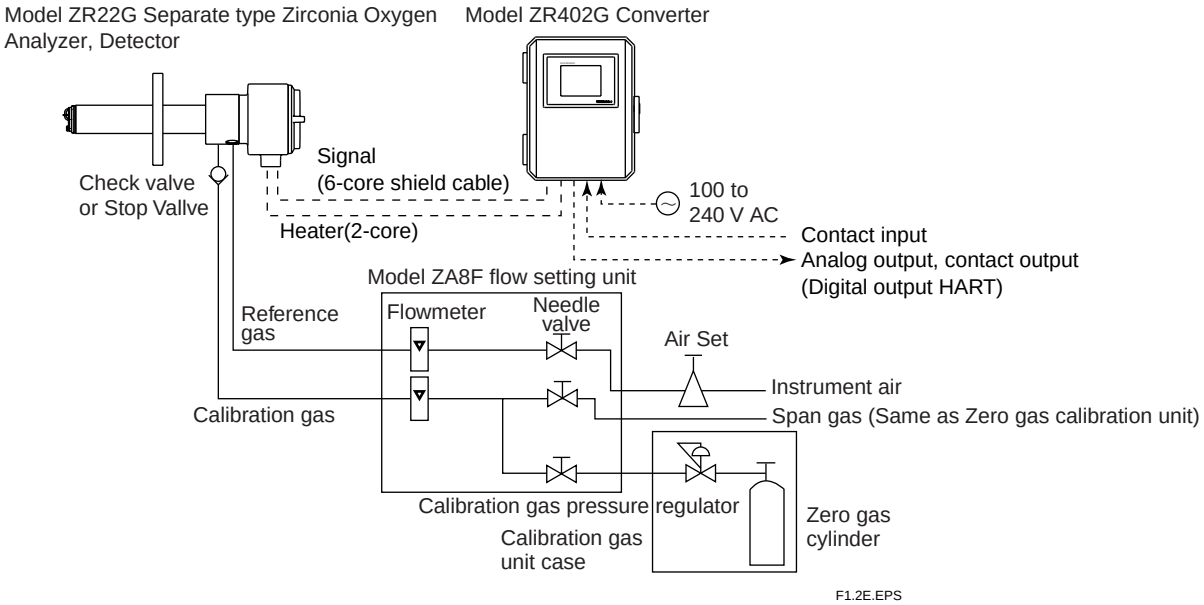

Figure1.2

1.1.3 System 3

This example, System 3, represents typical applications in large boilers and heating furnaces, where there is a need to monitor and control oxygen concentration. The reference gas and calibration-time span gas are (clean, dry) instrument air. Zero gas is supplied from a gas cylinder.

System 3 uses the ZR40H autocalibration unit, with auto-switching of the calibration gas. A “combustible gas detected” contact input turns off power to the heater. There’s also contact output from the converter that can be used to operate a purge gas valve to supply air to the sensor.

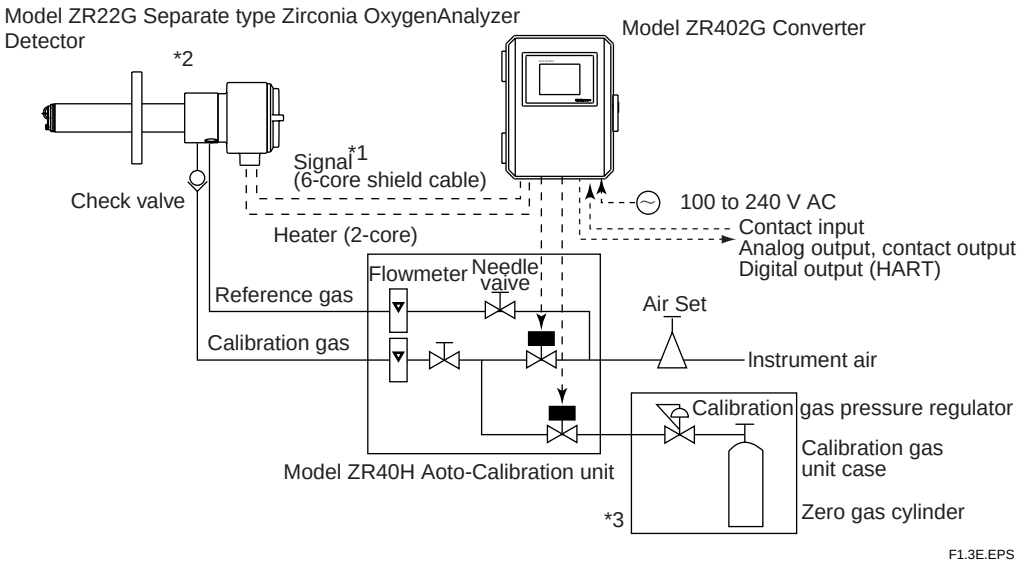

*1 Shield cable;

Use shielded signal cables, and connect the shield to the FG terminal of the converter.

*2 Select the desired probe from the Probe Configuration table on page 1-4.

*3 When a zirconia oxygen analyzer is used, 100% N_2 gas cannot be used as the zero gas. Use approximately 1% of O_2 gas (N2-based).

Figure1.3

1.2 < EXAxtZR > System Components

1.2.1 System Components

System Components	Sparate type System config. Ex.1	Ex.2	Ex.3
Model ZR22G Separate type Zirconia Oxygen Analyzers ,Detector	●	●	●
Model ZR402G Separate type Zirconia Oxygen Analyzer, Converter	●	●	●
Model ZO21P-H Adapter for High temperature Probe of separate type Zirconia Oxygen Analyzer	○	○	○
E7046EC, E7046EN Auxiliary Ejector for High temperature of separate type Oxygen Analyzer	○	○	○
Model ZO21R-L Probe Protector for Zirconia Oxygen Analyzers	○	○	○
K9471UA Filter for Oxygen Analyzer	○	○	○
Model ZO21S Standard Gas Unit	●		
Model ZA8F Flow setting unit for manual calibration		●	
Model ZR40H Automatic Calibration Unit for Separate type Analyzer			●
L9852CB, G7016XH Stop Valve for Calibration-gas line	●	(●)	
K9292DN,K9292DS Check Valve for Calibration-gas line		(●)	●
G7011XF, E7040EL Air Set		●	●
G7001ZC Zero-gas Cylinder		●	●
G7013XF, G7014XF Pressure Regulator for Gas Cylinder		●	●
E7044KF Case Assembly for Calibration-gas Cylinder		●	●
Model ZR22A, ZR202A Heater Assembly (Spare Parts for Model ZR22G)	○	○	○

● : Items required for the above system example

○ : To be selected depending on each application. For details, refer to corresponding chapter.

(●) : Select either

T1.1E.EPS

1.2.2 Detectors and Accessories

Process gas temperature 0 to 700°C				Process gas temperature 0 to 1400°C	
Mounting	Insertion length	General-use Probe	Application	High temperature detector	Application
Horizontal to vertical	0.4 to 2 m	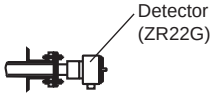	Boiler Heating furnace	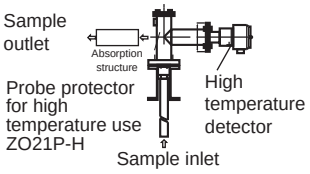 Temperature: Probe material SUS310S 800°C Probe material SiC 1400°C Mounting: Vertical downwards Insertion length: 1.0m, 1.5m When duct pressure is atmospheric or negative, attach air ejector. High temperature auxiliary ejector (E7046EC, E7046EN) 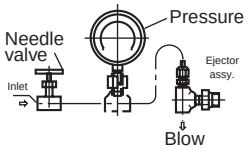	Heating furnace
Vertical	2.5 m or more				
Horizontal to vertical	3 m or less		For pulverized coal boiler with gas flow velocity 10 m/s or more		
Horizontal to vertical	0.4 to 2 m	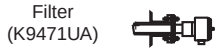	Black liquid recovery boiler Cement Kiln		
Vertical	2.5 m or more				

F1.4E.EPS

2. Specifications

This chapter describes the specifications for the following:

ZR22G	General-use separate-type detector (See Section 2.2.1)
ZO21R-L	Probe protector (See Section 2.2.2)
ZR22G (0.15 m)	High-temperature separate-type detector (See Section 2.3.1)
ZO21P-H	Adapter for High temperature probe (See Section 2.3.2)
ZR402G	Separate type converter (See Section 2.4)
ZA8F	Flow setting unit (See Section 2.5.1)
ZR40H	Automatic calibration unit (See Section 2.5.2)
ZO21S	Standard gas unit (See Section 2.6)

2.1 General Specifications

2.1.1 Standard Specifications

Measured Object: Oxygen concentration in combustion exhaust gas and mixed gas (excluding inflammable gases, may not be applicable corrosive gas such as ammonia is present−check with YOKOGAWA)

Measurement System: Zirconia system

Oxygen concentration: 0.01 to 100 vol% O_2

Output Signal: 4 to 20 mA DC (maximum load resistance 550Ω)

Measurement Range: Any setting in the range of 0 to 5 through 0 to 100 vol% O_2 (in 1 vol% O_2), or partial range

Digital Communication (HART): 250 to 550Ω, depending on number of field devices connected to the loop (multi-drop mode).

Note: HART is a registered trademark of the HART Communication Foundation.

Display Range: 0 to 100 vol% O_2

Warm-up Time: Approx. 20 min.

Repeatability: (Excluding the case where the reference air is by natural convection)

±0.5% Maximum value of range setting. (range up to 0 to 25 vol% O_2)

±1% Maximum value of range setting.

(range from 0 to 25 vol% O_2 up to 0 to 100 vol% O_2)

Linearity: (Excluding standard gas tolerance)

(Excluding the case where the reference air flow is natural convection)

(Use oxygen of known concentration (in the measuring range) as the zero and span calibration gas.)

±1% Maximun value of range setting ; from 0 to 5 vol% O_2 to 0 to 25 vol% O_2 range

(Sample gas pressure: within ±4.9 kPa)

±3% Maximun value of range setting ; from 0 to 25 vol%O_2 to 0 to 50 vol% O_2 range

(Sample gas pressure: within ±0.49 kPa)

±5% Maximum value of range setting ; from 0 to 50 vol% O_2 to 0 to 100 vol% O_2 range (Sample gas pressure: within ±0.49 kPa)

Drift: (Excluding the first two weeks in use)

(Excluding the case where the reference air flow is natural convection.)

Both zero and span ±2% Maximum value of range setting/month

Response Time : Response of 90% within 5 seconds. (Measured from when gas is introduced from calibration gas inlet and analog output start changing.)

2.2 General-use Separate-type Detector and Related Equipment

General-use separate-type detector ZR22 can be used in combination with the probe protector ZO21R-L (see Section 2.2.2).

2.2.1 ZR22G General-use Separate-type Detector

Sample Gas Temperature: 0 to 700° C (Probe only)

It is necessary to mount the cell using Inconel cell-bolts when the temperature is 600° C or greater.

700 to 1400° C (with High Temperature Probe Adapter)

For high-temperature sample gas, apply 0.15 m length probe and High tempera ture Probe Adapter ZO21P-H.

Sample Gas Pressure: -5 to +250 kPa (When the pressure in the furnace exceeds 3 kPa, it is recommended that you compensate for this pressure. When the pressure in the furnace exceeds 5 kPa, you must perform pressure compensation.)

For 0.15m probe, 0.5 to 5kPa.

No pressure fluctuation in the furnace should be allowed.

Probe Length: 0.15, 0.4, 0.7, 1.0, 1.5, 2.0, 2.5, 3.0, 3.6, 4.2, 4.8, 5.4 m

Probe Material: SUS 316 (JIS)

Ambient Temperature: -20 to +150° C

Reference Air System: Natural Convection, Instrument Air, Pressure Compensation (other than for probe length 0.15 m)

Instrument Air System (excluding Natural Convection) :

Pressure; 200 kPa + the pressure inside the furnace (It is recommended to use air which has been dehumidified by cooling to dew point -20° C or less, and had dust or oil mist removed.)

Consumption; Approx. 1 Nl/min

Material in Contact with Gas: SUS 316 (JIS), Zirconia, SUS 304 (JIS) (flange), Hastelloy B, (Inconel 600, 601)

Construction: Heater and thermocouple replaceable construction. Non explosionproof.

Equivalent to NEMA 4X/IP66 (recirculation to furnace with pressure compen sation only)

Terminal Box Case: Material; Aluminium alloy

Terminal Box Paint Color:

Case; Off-white (Munsell 0.6GY3.1/2.0)

Cover; Moss green (Munsell 2.5Y8.4/1.2)

Finish: Polyurethane corrosion-resistant coating

Gas Connection: Rc1/4 or 1/4FNPT

Wiring Connection: G1/2, Pg13.5, M20 by 1.5 mm, 1/2 NPT

Installation: Flange mounting

Probe Mounting Angle: Horizontal to vertically downward.

When the probe insertion length is 2 m or less, can install at angles from horizontal to vertically downward.

When the probe insertion length is 2.5 or more, mount vertically downward (within ±5°), and if using a probe protector install at angles between horizontal and vertically downward (within ±5°).

Weight:

Insertion length of 0.4 m: approx. 6 kg (JIS 5K-65) / approx. 11 kg (ANSI 150-4)

Insertion length of 1.0 m: approx. 8 kg (JIS 5K-65)) / approx. 13 kg (ANSI 150-4)

Insertion length of 1.5 m: approx. 10 kg (JIS 5K-65)) / approx. 15 kg (ANSI 150-4)

Insertion length of 2.0 m: approx. 12 kg (JIS 5K-65)) / approx. 17 kg (ANSI 150-4)

Insertion length of 3.0 m: approx. 15 kg (JIS 5K-65)) / approx. 20 kg (ANSI 150-4)

Insertion length of 3.6 m: approx. 17 kg (JIS 5K-65)) / approx. 22 kg (ANSI 150-4)

Insertion length of 4.2 m: approx. 19 kg (JIS 5K-65)) / approx. 24 kg (ANSI 150-4)

Insertion length of 4.8 m: approx. 21 kg (JIS 5K-65)) / approx. 26 kg (ANSI 150-4)

Insertion length of 5.4 m: approx. 23 kg (JIS 5K-65)) / approx. 28 kg (ANSI 150-4)

Model	Suffix code	Option code	Description
ZR22G	----------	----------	Separate type Zirconia Oxygen Analyzer, Detector
Length	-015	----------	0.15 m (for high temperature use) (*1)
	-040	----------	0.4 m
	-070	----------	0.7 m
	-100	----------	1.0 m
	-150	----------	1.5 m
	-200	----------	2.0 m
	-250	----------	2.5 m (*2)
	-300	----------	3.0 m (*2)
	-360	----------	3.6 m (*2)
	-420	----------	4.2 m (*2)
	-480	----------	4.8 m (*2)
	-540	----------	5.4 m (*2)
Wetted material	-S	----------	SUS316
	-C	----------	Stainless steel with Inconel calibration gas tube (*7)
Flange (*3)	-A	----------	ANSI CLASS 150-2-RF (Equivalent)
	-B	----------	ANSI CLASS 150-3-RF (Equivalent)
	-C	----------	ANSI CLASS 150-4-RF (Equivalent)
	-E	----------	DIN PN10-DN50-A (Equivalent)
	-F	----------	DIN PN10-DN80-A (Equivalent)
	-G	----------	DIN PN10-DN100-A (Equivalent)
	-K	----------	JIS 5K-65-FF
	-L	----------	JIS 10K-65-FF
	-M	----------	JIS 10K-80-FF
	-P	----------	JIS 10K-100-FF
	-Q	----------	JIS 5K-32-FF (Equivalent) (for high temperature use) (*4)
	-R	----------	JPI CLASS 150-4-RF
	-S	----------	JPI CLASS 150-3-RF
	-W	----------	Westinghouse
Reference air	-C	----------	Natural convection
	-E	----------	External connection (Instrument air)
	-P	----------	Pressure compensation
Gas Thread	-R	----------	Rc 1/4
	-T	----------	1/4 FNPT
Connection box thread	-P	----------	G1/2
	-G	----------	Pg13.5
	-M	----------	M20 x1.5 mm
	-T	----------	1/2NPT
	-Q	----------	Quick connect (*9)
Instruction manual	-J	----------	Japanese
	-E	----------	English
—	-A	----------	Always -A
Options		/D	DERAKANE coating (*10)
		/C	Inconel bolt (*5)
		/CV	Check valve (*6)
		/SV	Stop valve (*6)
		/F1	Dust Filter
		/SCT	Stainless steel tag plate (*8)
		/PT	Printed tag plate (*8)

*1 Used with the ZO21P High temperature Probe Adapter. Select flange (-Q).
*2 When installing horizontally the probe whose insertion length is 2.5 meters or more, use the Probe Protector. Be sure to specify ZO21R-L-□□□-□. Specify the flange suffix code either -C or -K.
*3 The thickness of the flange depends on its dimensions.
*4 Not used in conjunction with —P (pressure compensation) for reference air.
*5 Inconel probe bolts and U shape pipe for calibrationare used. Use this option for high temperature use (ranging from 600 to 700°C).
*6 Specify either /CV or /SV option code.
*7 Recommended if measured gas contains corrosive gas like chlorine.
*8 Specify either /SCT or /PT option code.
*9 Available only in the U.S. No water proof,avoid rain. Operating maximun temperature is 80°C.
*10 Available only in the U.S. DERAKANE is a resistered trademark of the Dou chemical Company.

T03.EPS

EXTERNAL DIMENSIONS

1. Model ZR22G Separate type Zirconia Oxygen Analyzer, Detectors

Unit : mm

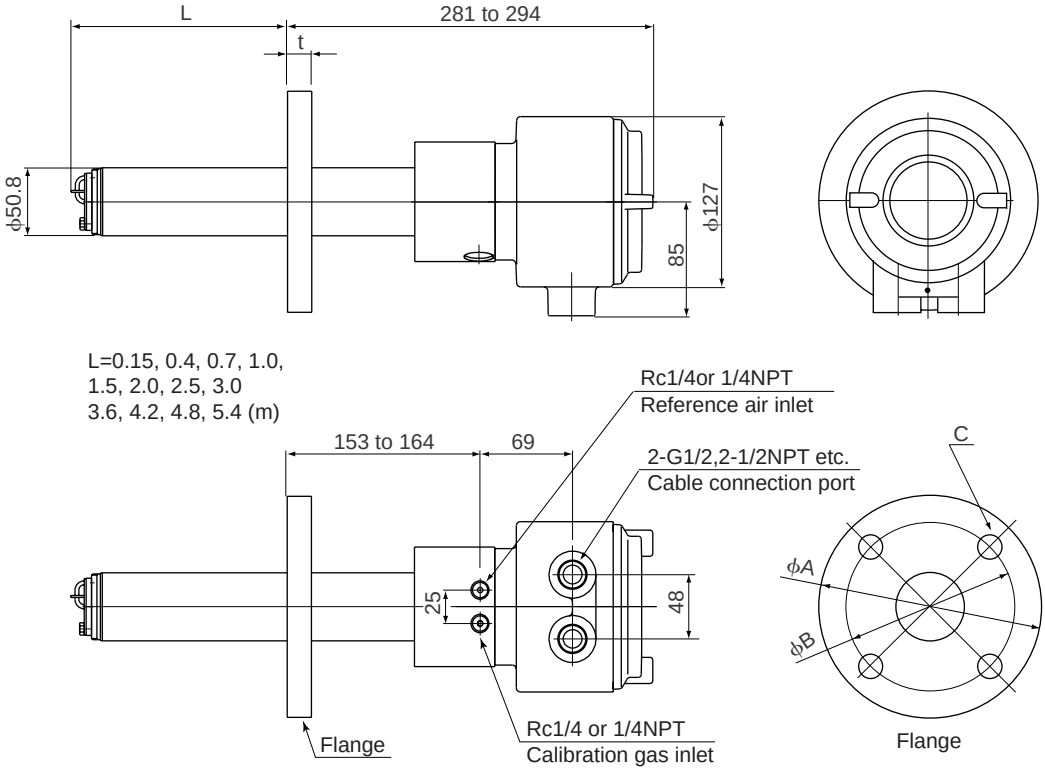

Flange	A	B	C	t
ANSI CLASS 150-2-RF equivalent	152.4	120.6	4 -ϕ19	19
ANSI CLASS 150-3-RF equivalent	190.5	152.4	4 -ϕ19	24
ANSI CLASS 150-4-RF equivalent	228.6	190.5	8 -ϕ19	24
DIN PN10-DN50-A equivalent	165	125	4 -ϕ18	18
DIN PN10-DN80-A equivalent	200	160	8 -ϕ18	20
DIN PN10-DN100-A equivalent	220	180	8 -ϕ18	20
JIS 5K-65-FF	155	130	4 -ϕ15	14
JIS 10K-65-FF	175	140	4 -ϕ19	18
JIS 10K-80-FF	185	150	8 -ϕ19	18
JIS 10K-100-FF	210	175	8 -ϕ19	18
JIS 5K-32-FF equivalent	115	90	4 -ϕ15	5
JPI CLASS 150-4-RF	229	190.5	8 -ϕ19	24
JPI CLASS 150-3-RF	190	152.4	4 -ϕ19	24
Westinghouse	155	127	4 -ϕ11.5	14

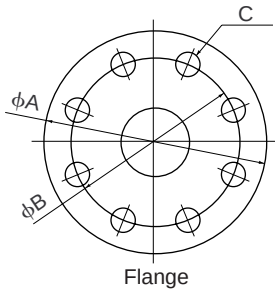

● Accessories

Item	Part. No.	Qty	Description
Allen wrench	L9827AB	1	for lock-screw

F2.1E.EPS

Model ZR22G...-P (with pressure compensation) Separate type Zirconia Oxygen Analyzer, Detectors

Unit : mm

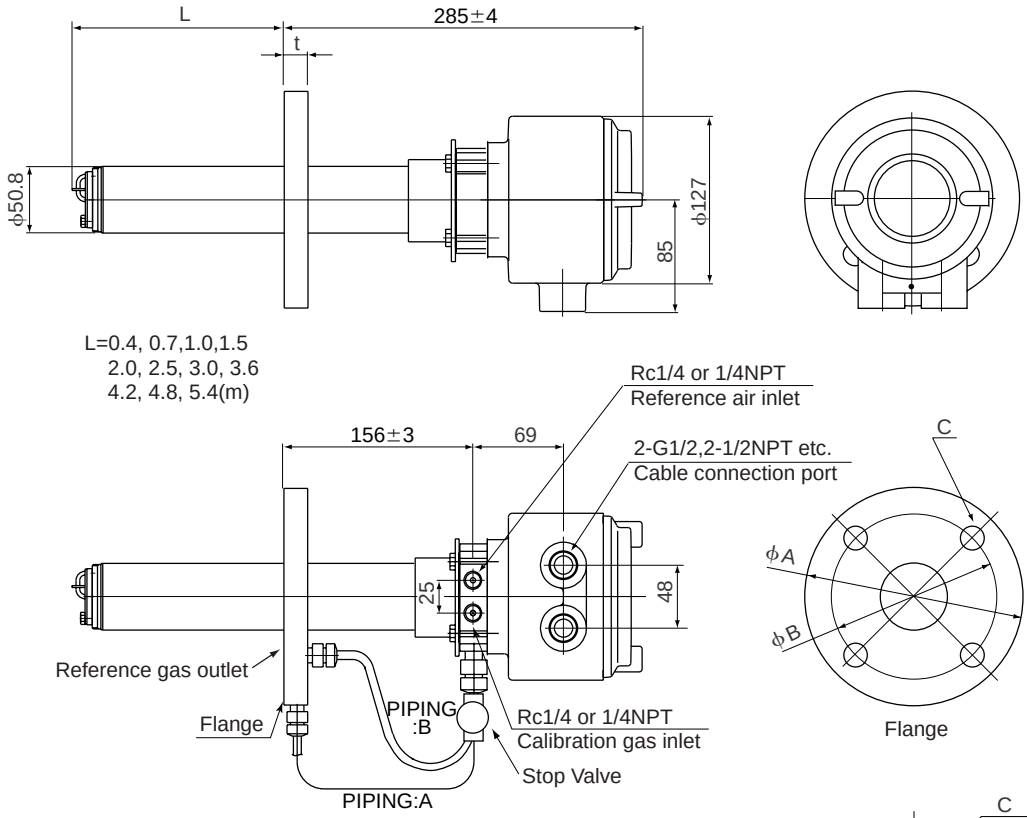

Flange	A	B	C	t	PIPING
ANSI CLASS 150-2-RF equivalent	152.4	120.6	4 - ∅19	19	A
ANSI CLASS 150-3-RF equivalent	190.5	152.4	4 - ∅19	24	B
ANSI CLASS 150-4-RF equivalent	228.6	190.5	8 - ∅19	24	B
DIN PN10-DN50-A equivalent	165	125	4 - ∅18	18	A
DIN PN10-DN80-A equivalent	200	160	8 - ∅18	20	B
DIN PN10-DN100-A equivalent	220	180	8 - ∅18	20	B
JIS 5K-65-FF	155	130	4 - ∅15	14	A
JIS 10K-65-FF	175	140	4 - ∅19	18	A
JIS 10K-80-FF	185	150	8 - ∅19	18	B
JIS 10K-100-FF	210	175	8 - ∅19	18	B
JPI CLASS 150-4-RF	229	190.5	8 - ∅19	24	B
JPI CLASS 150-3-RF	190	152.4	4 - ∅19	24	B
Westinghouse	155	127	4 - ∅11.5	14	A

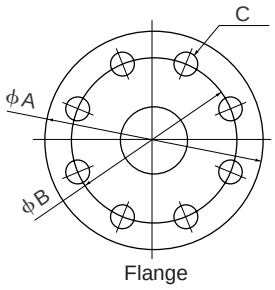

● Accessories

Item	Part. No.	Qty	Description
Allen wrench	L9827AB	1	for lock-screw

F2.2E.EPS

2.2.2 ZO21R-L Probe Protector

This probe protector is required for the general-use detector when it is used for oxygen concentration measurements in powdered coal boilers or in fluidized furnaces to prevent abrasion due to dust particles when gas flow exceeds 10 m/s.

When using a ZR22G general-use separate-type detector in the horizontal position, be sure to select a probe protector ZO21R-L-□□□-□*B to support the probe.

Insertion Length: 1.05 m, 1.55 m, 2.05 m.

Flange: JIS 5K 65A FF equivalent. ANSI CLASS 150-4-FF (without serration) equivalent. However, flange thickness is different.

Material: SUS316 (JIS), SUS304 (JIS) (Flange)

Weight: 1.05 m; Approx. 6/10 kg (JIS/ANSI), 1.55 m; Approx. 9/13 kg (JIS/ANSI), 2.05 m; Approx. 12/16 kg (JIS/ANSI)

Installation: Bolts, nuts, and washers are provided for detector, probe adapter and process-side flange.

Model	Suffix code	Option code	Description
ZO21R	-L - - - - - - -	- - - -	Probe Protector (0 to 700 °C)
Insertion length	-100 - - - -	- - - -	1.05 m (3.5 ft)
	-150 - - - -	- - - -	1.55 m (5.1 ft)
	-200 - - - -	- - - -	2.05 m (6.8 ft)
Flange (*1)	-J - - - -	- - - -	JIS 5K-65A-FF equivalent
	-A - - - -	- - - -	ANSI CLASS150-4-FF equivalent
Style code	*B - -	- - - -	Style B

T2.2E.EPS

*1 Thickness of flange depends on dimensions of flange.

Unit : mm

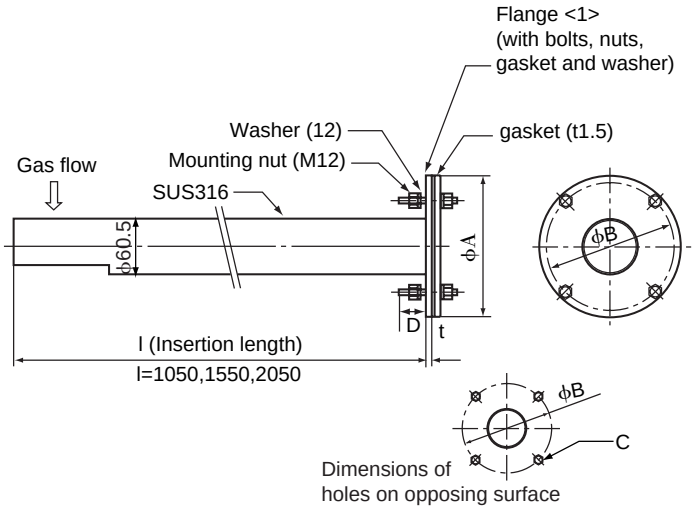

Flange<1>	A	B	C	t	D
JIS 5K-65-FF equivalent	155	130	4 -∅15	5	40
ANSI CLASS 150-4-FF equivalent	228.6	190.5	8 -∅19	12	50

F2.3E.EPS

2.3 High-Temperature Separate-type Detector and Related Equipment

2.3.1 ZR22G (0.15m) High-Temperature Separate-type Detector

Standard Specifications

Construction: Water-resistant, non-explosionproof

Probe length: 0.15 m

Terminal box: Aluminium alloy

Probe material: Probe material in contact with gas: SUS 316 (JIS) (Probe), SUS 304 (JIS) (Flange), Zirconia (Sensor), Hastelloy B, (Inconel 600, 601)

Weight: Approx. 3 kg

Installation: Flange mounting (The use of high-temperature detector probe adapter ZO21P-H is necessary.)

Flange standard: JIS 5 K 32 FF equivalent (thickness varies)

Mounting angle: Any angle between horizontal and vertical (high-temperature probe is fitted with an adapter) Reference gas and calibration gas piping connection:Rc 1/4 or 1/4 NPT female

Cable inlet: G 1/2, Pg 13.5, M20 × 15, 1/2 NPT

Ambient temperature: -20 to 150° C

Sample gas temperature: 0 to 700° C (temperature at the measuring point of the sampling gas. 0 to 750° C or 0 to 1400° C when the probe adapter for high temperature is used.

Temperature of the probe adapter shall not exceed 300° C to protect the gasket and avoid the bolts seizing together.

Sample gas pressure: -0.5 to +5 kPa: when used at the range of more than 0 to 25 vol% O_2, -0.5 to +0.5 kPa. (An auxiliary ejector is required for negative pressure application.)

Model and Code

Refer to “Model and Code” in page 2-5.

External Dimensions

Refer to the Figure in page 2-6.

2.3.2 ZO21P-H Adapter for High-Temperature Probe

The probe adapter is used to lower the sample gas to a temperature below 700° C (below 300° C at probe adapter surface) before it is fed to the detector.

Insertion length: 1 m, 1.5 m

Material in Contact with Gas: SUS 316 (JIS), Zirconia, SiC or SUS 310S, SUS 304 (JIS) (flange)

Probe Material: SiC, SUS 310S (JIS)

Installation: Flange mounting (FF type or RF type)

Probe Mounting Angle: Vertically downward within ±5°

Where the probe material is SUS 310S, horizontal mounting is available.

Construction: Non explosion-proof. Rainproof construction

Weight: Insertion length of 1.0 m: approx. 6.5 kg (JIS) / approx. 8.5 kg (ANSI)

Insertion length of 1.5 m: approx. 7.5 kg (JIS) / approx. 9.5 kg (ANSI)

Sample gas temperature: 0 to 1400° C (when using SiC probe) 0 to 800° C (when using SUS 310S probe adapter)

Sample gas pressure: -0.5 to + 5 kPa. When using in the range of 0 to 25 vol% O_2 or more, the sample gas pressure should be in the range of -0.5 to +0.5 kPa. (Where the sample gas pressure for the high-temperature probe is negative, an auxiliary ejector is necessary.)

Model	Suffix code	Option code	Description
ZO21P	-H		High Temperature Probe Adapter
Material	-A		SiC
	-B		SUS 310S
Insertion length	-100		1.0 m
	-150		1.5 m
Flange	-J		JIS 5K-50-FF equivalent
	-N		JIS 10K-65-FF equivalent
	-M		JIS 10K-80-FF equivalent
	-L		JIS 10K-100-FF equivalent
	-A		ANSI CLASS150-4RF equivalent
	-R		ANSI CLASS150-2 1/2-RF equivalent
	-Q		ANSI CLASS150-3-RF equivalent
	-T		JPI CLASS150-3-RF equivalent
	-S		JPI CLASS150-4-RF equivalent
	-E		DIN PN10-DN50-A equivalent
Style code	*A		Style A

T2.3E.EPS

Unit: mm

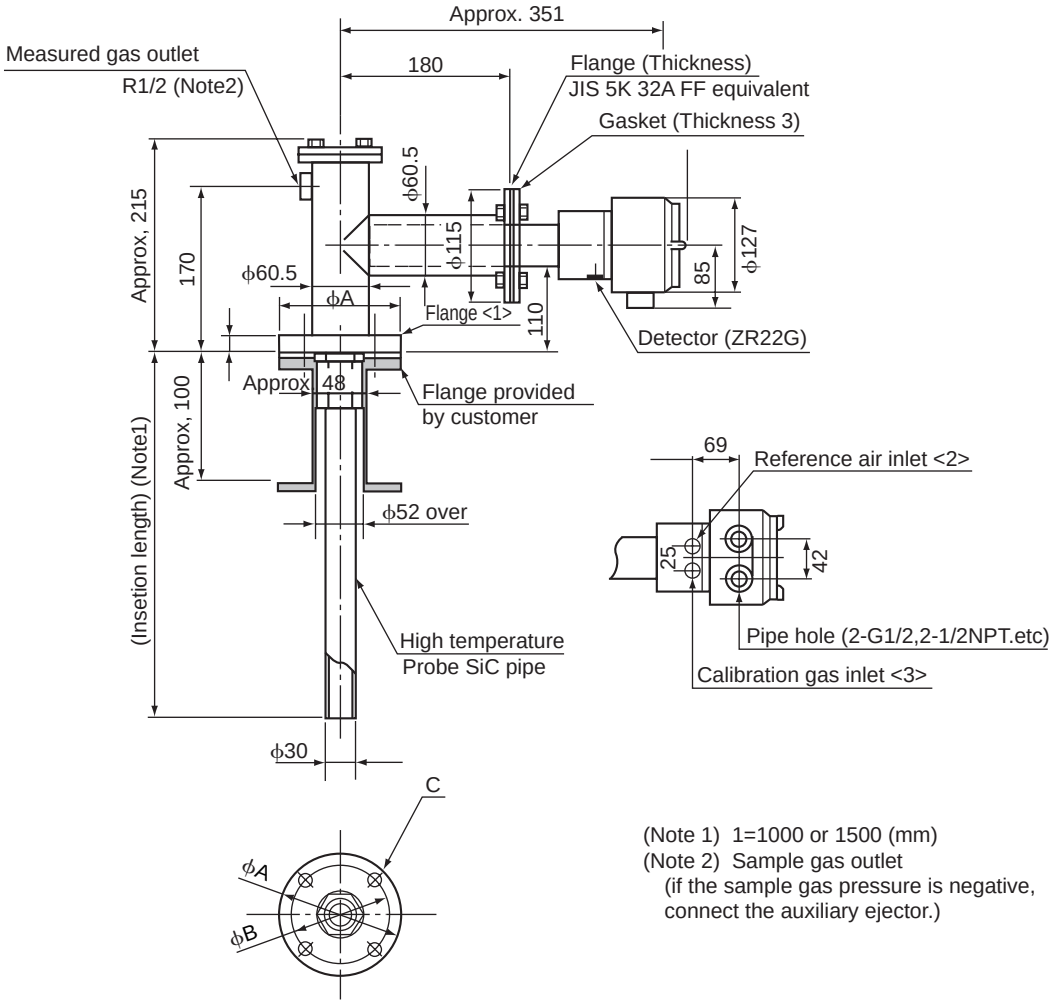

(Note 1) 1=1000 or 1500 (mm)
(Note 2) Sample gas outlet
(if the sample gas pressure is negative, connect the auxiliary ejector.)

<1> Flange	<2>,<3> joint	A	B	C
JIS 5K-50-FF equivalent	Rc 1/4	130	105	4-∅15
ANSI CLASS 150-4-RF equivalent	1/4 FNPT	228.6	190.5	8-∅19

F2.4E.EPS

2.4 ZR402G Separate-type Converter

2.4.1 Standard Specification

The ZR402G Separate-type Converter can be controlled by LCD touchscreen on the converter.

Display: LCD display of size 320 by 240 dot with touchscreen.

Output Signal: 4 to 20 mA DC, two points (maximum load resistance 550 Ω)

Contact Output Signal: four points (one is fail-safe, normally open)

Contact Input: two points

Auto-calibration Output: Two points (for dedicated auto-calibration unit)

Ambient Temperature: -20 to +55° C

Storage Temperature: -30 to +70° C

Humidity Range: 0 to 95%RH (Non-condensing)

Installation Altitude: 2000 m or less

Category based on IEC 1010: II (Note)

Pollution degree based on IEC 1010: 2 (Note)

Note: Installation category, called over-voltage category, specifies impulse withstanding voltage. Category II is for electrical equipment.

Pollution degree indicates the degree of existence of solid, liquid, gas or other inclusions which may reduce dielectric strength. Degree 2 is the normal indoor environment.

Power Supply Voltage: Ratings; 100 to 240 V AC Acceptable range; 85 to 264 V AC

Power Supply Frequency: Ratings; 50/60 Hz Acceptable range; 45 to 66 Hz

Power Consumption: Max. 300 W, approx. 100 W for ordinary use.

Safety and EMC conforming standards

Safety: Conforms to EN 61010-1: 1993

CSA C22.2 No.1010-1 certified

UL 3111-1 certified

EMC: Conforms to EN 61326: 1998

Maximum Distance between Probe and Converter: Conductor two-way resistance must be 10 Ω or less (when a 1.25 mm^2 cable or equivalent is used, 300 m or less.)

Construction: Outdoor installation, equivalent to NEMA 4 (with conduit holes com pletely sealed with a cable gland)

Wiring Connection: G1/2, Pg13.5, M20 by 1.5 mm, 1/2 NPT, eight holes

Installation: Panel, wall or 2-inch pipe mounting

Case: Aluminum alloy

Paint Color: Door: Moss green (Munsell 0.6GY3.1/2.0)

Case: Off white (Munsell 2.5Y8.4/1.2)

Finish: Polyurethane corrosion-resistance coating

Weight: Approx. 6 kg

2.4.2 Functions

Display Functions:

Value Display; Displays values of the measured oxygen concentration, etc

Graph Display; Displays trends of measured oxygen concentration

Data Display; Displays various useful data for maintenance, such as cell temperature, reference junction temperature, maximum/minimum oxygen concentration, or the like

Status Message; Indicates an alarm or error occurrence with flashing of the corresponding icon. Indicates status such as warming-up, calibrating, or the like by symbols.

Alarm, Error Display; Displays alarms such as “Abnormal oxygen concentra tion” or errors such as “Abnormal cell e.m.f.” when any such status occurs.

Calibration Functions:

Auto-Calibration; Requires the Auto-calibration Unit. It calibrates automatically at specified intervals.

Semi-auto Calibration; Requires the Auto-calibration Unit. Input calibration direction on the touchpanel or contact, then it calibrates automatically afterwards.

Manual Calibration; Calibration with opening/closing the valve of calibration gas in operation interactively with an LCD panel.

Blowback Function:

Output through the contact in the set period and time. Auto/semi-auto select able.

Maintenance Functions:

Can operate updated data settings in daily operation and checking. Display data settings, calibration data settings, blowback data settings, current output loop check, input/output contact check.

Setup Functions:

Initial settings suit for the plant conditions when installing the converter. Equipment settings, current output data settings, alarm data settings, contact data settings, other settings.

Self-diagnosis:

This function diagnoses conditions of the converter or the probe and indicates when any abnormal condition occurs.

Password Functions:

Enter your password to operate the analyzer excepting data display. Individual passwords can be set for maintenance and setup.

Display and setting content:

Measuring-related items: Oxygen concentration (vol% O_2), Output current value (mA), air ratio, moisture quantity (in hot gases) (vol% H_2O)

Display Items: Cell temperature (° C), thermocouple reference junction temperature (° C), maximum/minimum/average oxygen concentration (vol% O_2), cell e.m.f. (mV), cell internal resistance (V), cell condition (in four grades), heater on-time rate (%), calibration record (ten times), time (year/month/day, hour/minute)

Calibration Setting Items: Span gas concentration (vol% O_2), zero-gas concentration (vol%O_2), calibration mode (auto, semi-auto, manual), calibration type and method (zero-span calibration, zero calibration only, span calibration only), stabilization time (min.sec), calibration time (min.sec), calibration period (day/hour), starting time (year/month/day, hour/minute)

Equipment Related Items: Measuring gas selection

Output Related Items: Analog output/output mode selection, output conditions when warming-up/maintenance/calibrating (during blowback)/abnormal, 4 mA/20 mA point oxygen concentration (vol% O_2), time constant.

Alarm Related Items: Oxygen concentration high-alarm/high-high alarm limit values (vol% O_2), Oxygen concentration low-alarm/low-low alarm limit values (vol% O_2), Oxygen concentration alarm hysteresis (vol% O_2), Oxygen concen tration alarm detection, alarm delay (seconds)

Contact Related Items: Selection of contact input 1 and 2, selection of contact output 1 to 4 (abnormal, high-high alarm, high-alarm, low-alarm, low-low alarm, maintenance, calibrating, range switching, warming-up, calibration-gas pressure decrease, temperature high-alarm, blowback, flameout gas detection)

Converter Output: Two points mA analog output (4 to 20 mA DC (maximum load resistance of 550 Ω)) and one mA digital output point (HART) (minimum load resistance of 250 Ω).

Range: any setting between 0 to 5 through 0 to 100 vol% O_2 in increments 1vol% O_2, or partial range is available (Maximum range value/minimum range value 1.3 or more)

For the log output, the minimum range value is fixed at 0.1 vol% O_2.

4 to 20 mA DC linear or log can be selected.

Input/output isolation provided.

Output damping: 0 to 255 seconds.

Can select hold or non-hold, and set preset value for hold.

Contact Output: Four points, contact capacity 30 V DC 3 A, 25 0V AC 3 A (resistive load)

Three of the output points can be selected to either normally energized or normally de-energized status.

Delayed functions (0 to 255 seconds) and hysteresis function (0 to 9.9 vol% O_2 can be added to high/low alarms.

The following functions are programmable for contact outputs.

(1) Abnormal, (2) High-high alarm, (3) High-alarm, (4) Low-low alarm, (5) Low-alarm, (6) Maintenance, (7) Calibration, (8) Range switching answer-back, (9) Warm-up, (10) Calibration-gas pressure decrease (answer-back of contact input), (11) Temperature high-alarm, (12) Blowback start, (13) Flameout gas detection (answerback of contact input)

Contact Input: Two (points, voltage-free) contact in inputs

The following functions are programmable for contact inputs:

(1) Calibration-gas pressure decrease alarm, (2) Range switching (Switched range is fixed), (3) External calibration start, (4) Process alarm (if this signal is received, the heater powerturns off), (5) Blow-back start

Contact capacity: Off-state leakage current: 3 mA or less

Self-diagnosis: Abnormal cell, abnormal cell temperature (low/high), abnormal calibra tion, defective A/D converter, defective digital circuit

Calibration:

Method; zero/span calibration

Calibration mode; automatic, semi-automatic and manual (All are operated interactively with an LCD touchpanel). Either zero or span can be skipped.

Zero calibration-gas concentration setting range: 0.3 to 100 vol% O_2 (in increments of 0.01 vol% O_2 in smallest units).

Span calibration-gas concentration setting range: 4.5 to 100 vol% O_2 (in increments of 0.01 vol% O_2 in smallest units).

Use nitrogen-based mixed gas containing 10 vol% O_2 scale of oxygen, and 80 to 100 vol% O_2 scale of oxygen for standard zero-gas and standard span-gas respectively.

Calibration period; date/time setting: maximum 255 days

● Model and Codes

Model	Suffix code	Option code	Description
ZR402G	----------	-------	Separate type Zirconia Oxygen Analyzer, Converter
Converter thread	-P	-------	G1/2
	-G	-------	Pg13.5
	-M	-------	M20x1.5 mm
	-T	-------	1/2NPT
Display	-J	-------	Japanese
	-E	-------	English
	-G	-------	German
	-F	-------	French
Instruction manual	-J	-------	Japanese
	-E	-------	English
—	-A	-------	Always -A
Options		/H	Hood (*2)
Tag plates		/SCT	Stainless steel tag plate (*1)
		/PT	Printed tag plate (*1)

T2.4E.EPS

*1 Specify either /SCT or /PT option code.
*2 Sun shield hood is still effective even if scratched.

(Note) If AC line voltage is 125V AC or greater, or in the EEC, the ZO21D cannot be used with the ZR402G.

• **External Dimensions**

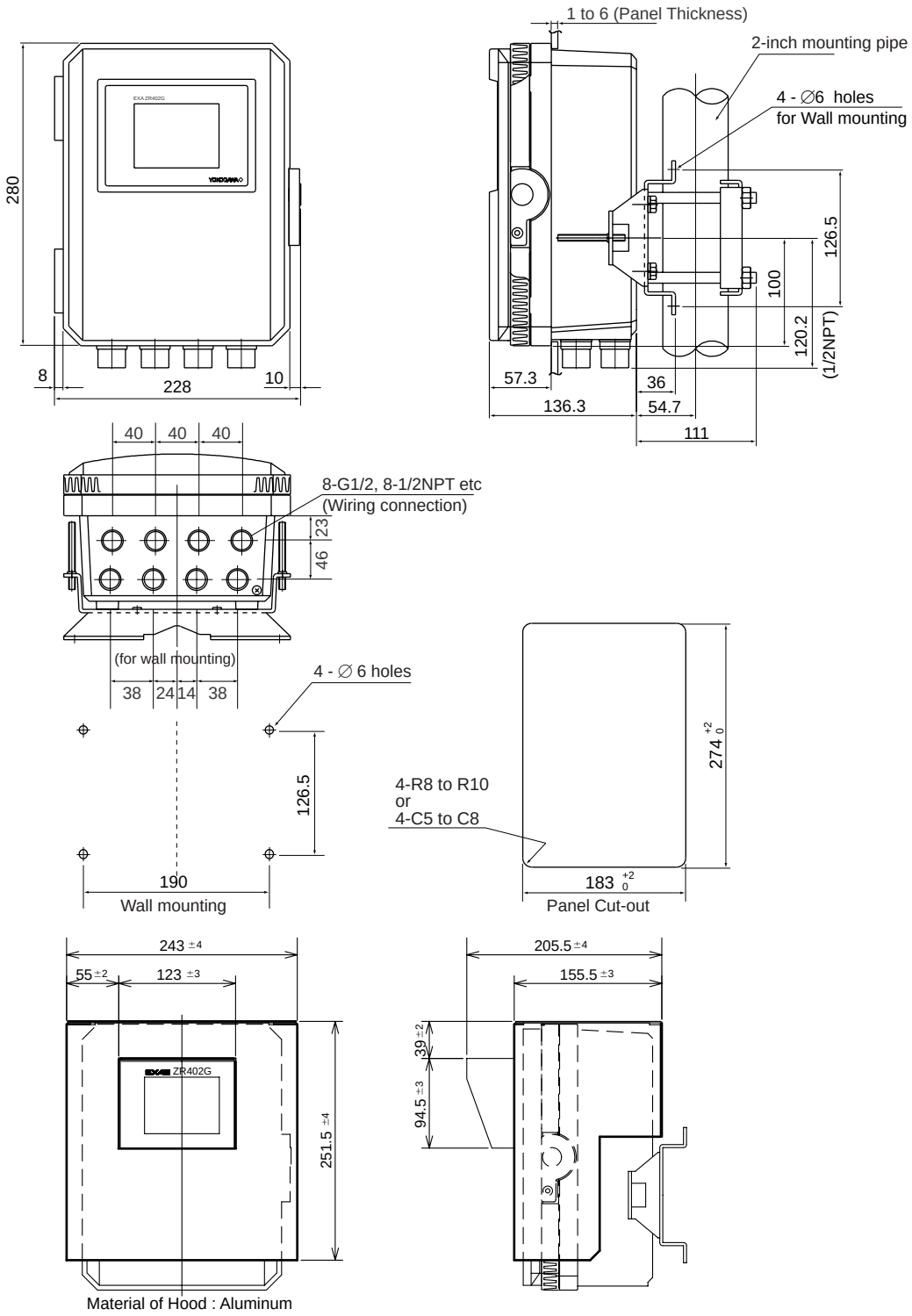

● Accessories

Item	Pat.No.	Qty	Description
Fuse	A1113EF	1	3.15A
Bracket for mounting	F9554AL	1	for pipe mounting, panel mounting or wall mounting
Screw for Bracket	F9123GF	1	

F2.5E.EPS

2.5 ZA8F Flow Setting Unit and ZR40H Automatic Calibration Unit

2.5.1 ZA8F Flow Setting Unit

This flow setting unit is applied to the reference gas and the calibration gas in a system configuration (System 2).

This unit consists of a flow meter and flow control valves to control the flow of calibration gas and reference air.

Standard Specifications

FIowmeter: Calibration gas; 0.1 to 1.0 l/min. Reference air; 0.1 to 1.0 l/min.

Construction: Dust-proof and rainproof construction

Case Material: SPCC (Cold rolled steel sheet)

Painting: Baked epoxy resin, Dark-green (Munsell 2.0 GY 3.1/0.5 or equivalent)

Pipe Connections: Rc1/4 or 1/4FNPT

Reference Air pressure: Clean air supply of measured gas pressure+approx. 50 kPa G

(or measured gas pressure plus approx. 150 kPa G when a cheack valve is used)

pressure at inlet of the auto-calibration unit.(Maximun 300 kPaG)

Air Consumption: Approx. 1.5 l/min

Weight: Approx. 2.3kg

Calibration gas (zero gas, span gas) flow 0.7 l/m (at calibration time only)

Note

Use instrument air for span calibration gas, if no instrument air is available, contact YOKOGAWA.

Model	Suffix code	Option code	Description
ZA8F			Flow setting unit
Joint	-J		Rc 1/4
	-A		With 1/4" NPT adapter
Style code	*B		Style B

T2.5E.EPS

• External Dimensions

Unit: mm

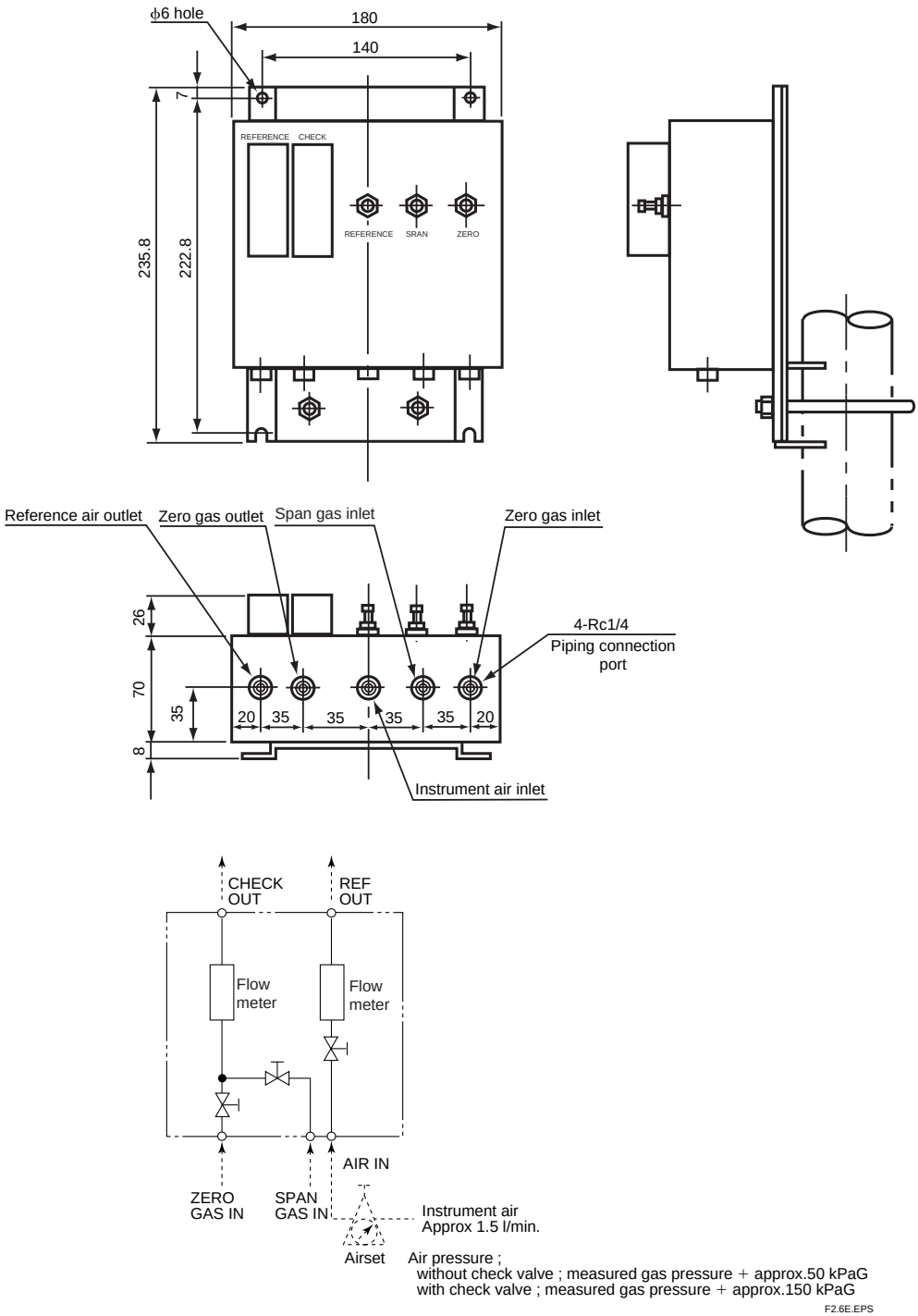

2.5.2 ZR40H Automatic Calibration Unit

This automatic calibration unit is applied to supply specified flow of reference gas and calibration gas during automatic calibration to the detector in a system configuration (System 3).

• Specifications

Used when auto calibration is required for the separate type and instrument air is provided. The solenoid valves are provided as standard.

Construction: Dust-proof and rainproof construction:

NEMA4X/IP67 solenoid valve only (excluding flowmeter)

Mounting: 2-inch pipe or wall mounting, no vibration

Materials: Body; Aluminum alloy, Piping; SUS316 (JIS), SUS304 (JIS), Flowmeter; MA (acrylic resin). Bracket; SUS304 (JIS)

Finish: Polyurethane corrosion-resistance coating, deep sea moss green (Munsell 0.6GY3.1/2.0)

Piping Connection: Refer to Model and Suffix Codes

Power Supply: 24V DC (from ZR402G), Power consumption; Approx.1.3W

Reference Air Pressure: Sample gas pressure + Approx. 150 kPa (690 kPa max.), (Pressure at inlet of auto-calibration unit)

Air Consumption: Approx. 1.5 l/min

Weight: Approx. 3.5 kg

Ambient Temperature: -20 to +55° C, no condensation or freezing

Ambient Humidity: 0 to 95% RH

Storage Temperature: -30 to +65° C

• Model and Codes

Model	Suffix code			Option code	Description
ZR40H					Automatic calibration unit for ZR402G
Gas piping connection	-R				Rc 1/4
	-T				1/4" NPT
Wiring connection		-P			Pipe connection (G1/2)
		-G			Pg 13.5
		-M			20 mm (M20 x 1.5)
		-T			1/2 NPT
-			-A		Always -A

T2.5-1E.EPS

• **External Dimensions**

2B pipe mounting example

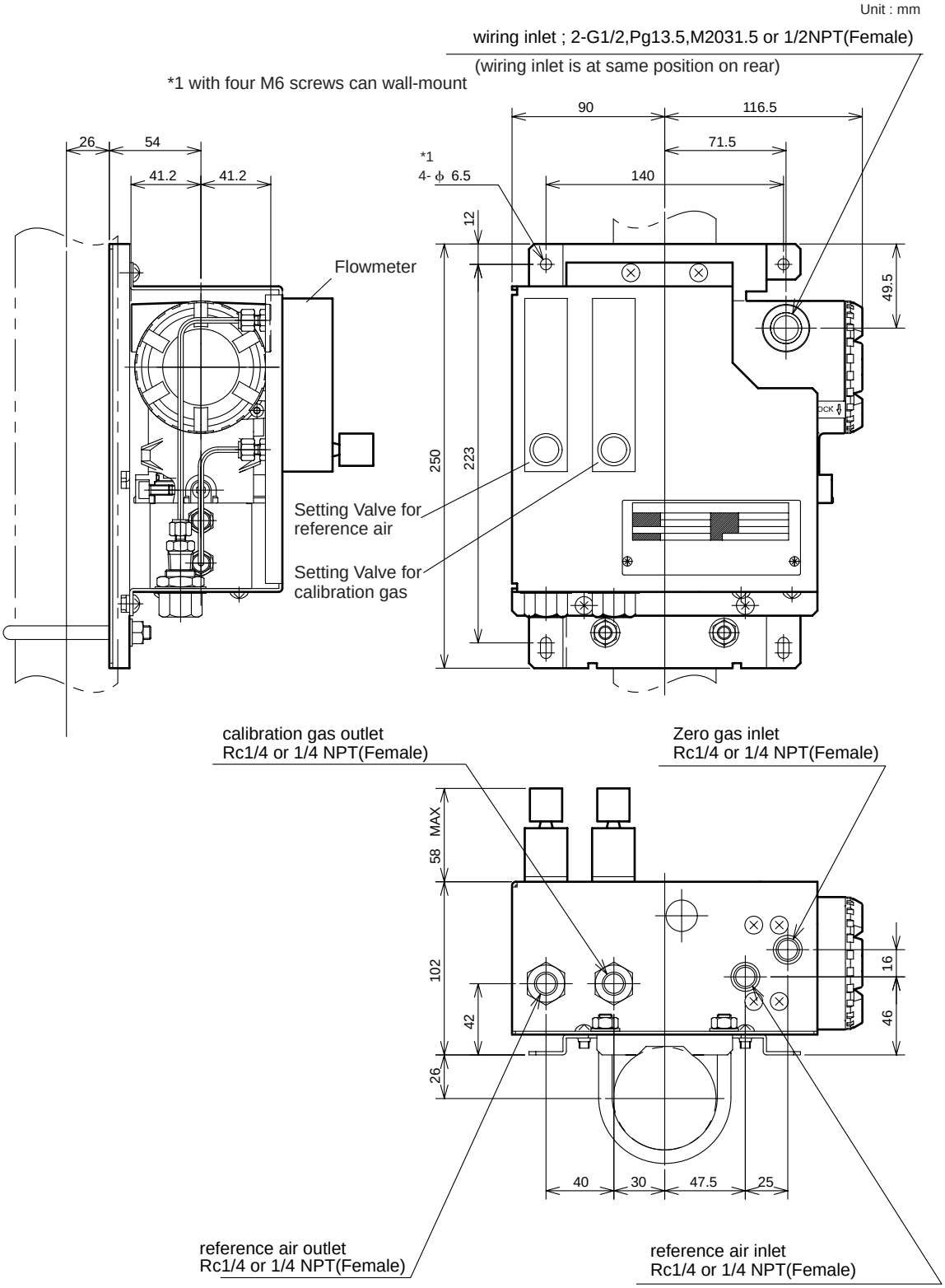

F2.6-2E.EPS

• Piping Diagram

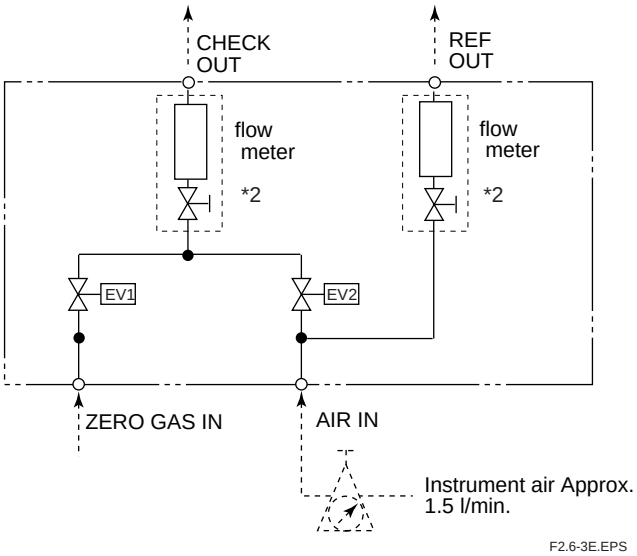

*2 Needle valve is supplied as accessory with flow meter.

2.6 ZO21S Standard Gas Unit

This is a handy unit to supply zero gas and span gas to the detector in a system configuration based on System 1. It is used in combination with the detector only during calibration.

Standard Specifications

Function: Portable unit for calibration gas supply consisting of span gas (air) pump, zero gas cylinder with sealed inlet, flow rate checker and flow rate needle valve.

Sealed Zero Gas Cylinders (6 provided): E7050BA

Capacity: 1 l

Filled pressure: Approx. 686 kPa G (at 35° C)

Composition: 0.95 to 1.0 vo1% O_2+N_2 based

Power Supply: l00, 110, 115, 200, 220, 240 V AC± 10%, 50/60 Hz

Power Consumption: Max. 5 VA

Case material: SPCC (cold rolled steel sheet)

Print: Epoxy resin, baked

Paint Color:

Mainframe; Munsell 2.0 GY3.1/0.5 equivalent

Cover; Munsell 2.8 GY6.4/0.9 equivalent

Piping: ∅6×∅4 mm flexible tube connection

Weight: Approx. 3 kg

Span gas: Internal pump draws in air from atmosphere, and feeds to detector

Model and Codes

Model	Suffix code	Option code	Description
ZO21S			Standard gas unit
Power supply	-2		200 V AC 50/60 Hz
	-3		220 V AC 50/60 Hz
	-4		240 V AC 50/60 Hz
	-5		100 V AC 50/60 Hz
	-7		110 V AC 50/60 Hz
	-8		115 V AC 50/60 Hz
Panel	-J		Japanese version
	-E		English version
Style code	*A		Style A

T2.6E.EPS

• External Dimensions

Unit : mm

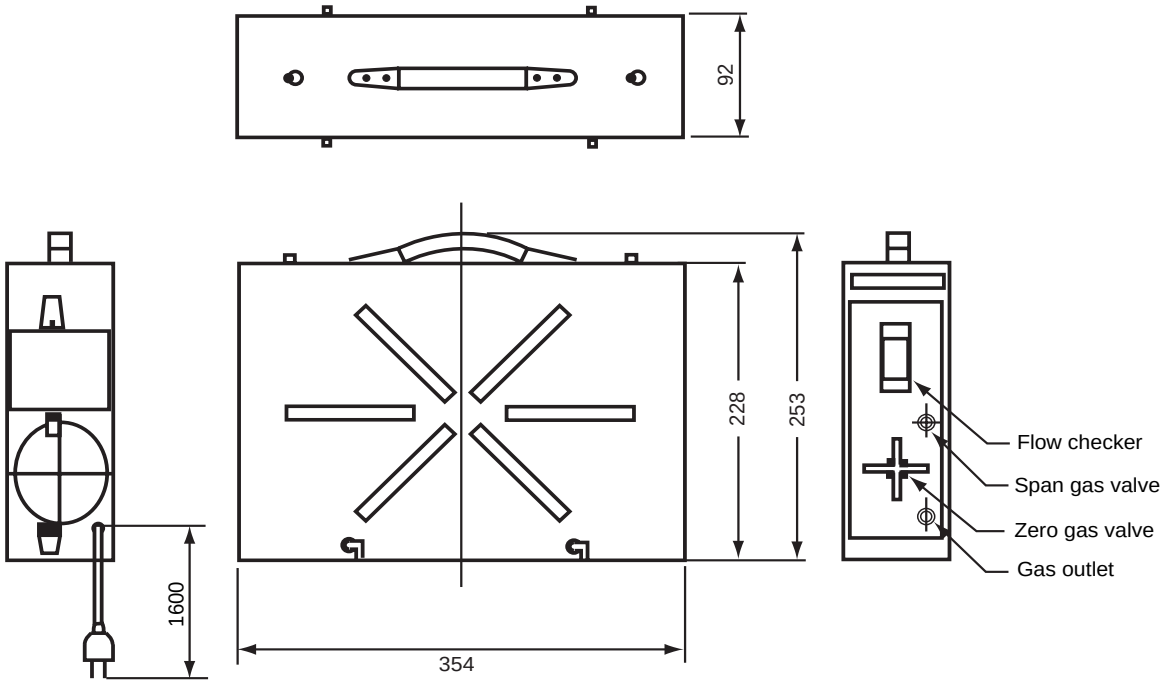

Zero gas cylinder (6 cylinder): E7050BA

F2.7E.EPS

2.7 Other Equipment

2.7.1 Dust Filter for the Detector (Part No.: K9471UA)

This filter is used to protect the detector sensor from a corrosive dust component or from a high concentration of dust when the oxygen concentration in utility boilers or concrete kilns are to be measured.

This filter requires a measurement gas flow of 1m/sec or faster, for circulation of the gas in the sensing part.

• Standard specification

Applicable detector: Standard-type detector for general-use (the measurement gas flow should be approximately perpendicular to the probe.)

Mesh: 30 microns

Material: Sic (Filter), SUS316 (JIS)

Weight: Approx. 0.2 kg

Part No.	Description
K9471UA	Filter
K9471UX	Tool

T2.7E.EPS

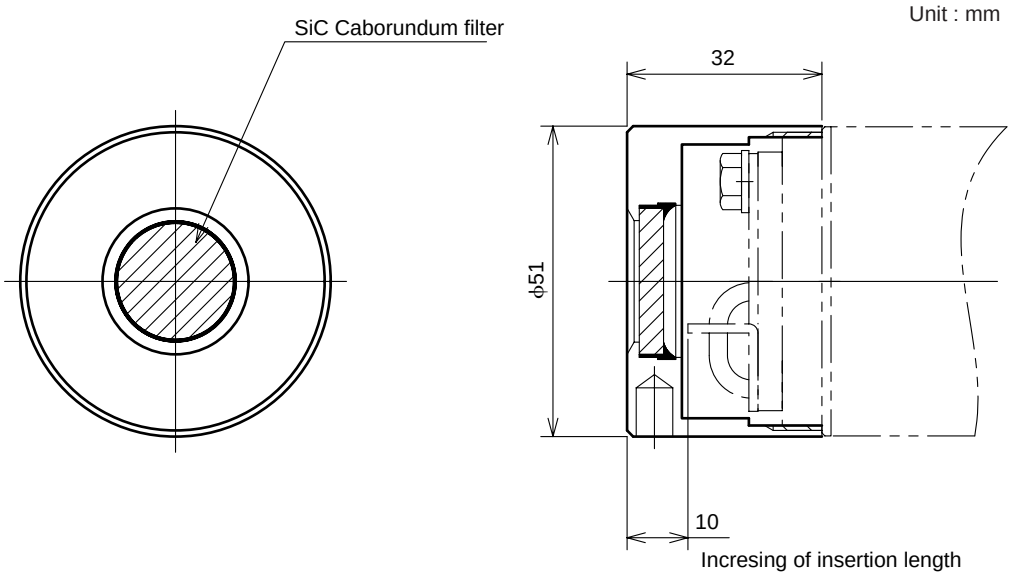

F2.8E.EPS

2.7.2 Auxiliary Ejector for High Temperature (Part No. E7046EC or E7046EN)

This ejector is used where pressure of measured gas for high temperature detector is negative. This ejector consists of an ejector assembly, a pressure gauge and a needle valve.

Standard Specifications

Ejector Assembly

Ejector Inlet Air Pressure: 29 to 68 kPa G

Air Consumption: Approx. 30 to 40 l/min

Suction gas flow rate: 3 to 7 l/min

Connection to high-temperature probe adapter: R 1/2

Connection: Rc1/4 or 1/4 FNPT, SUS304 (JIS)

Tube Connection: (ϕ 6/ϕ 4 mm or 1/4 inch copper tube or stainless tube)

Pressure Gauge Assembly

Type: JIS B7505, A1.5U3/8 x75

Material in Contact with Gas: SUS316 (JIS)

Case Material: Aluminum alloy (Paint color; black)

Scale: 0 to 100 kPa G

Bushing (G3/8 x Rc1/4 or 1/4NPT, SUS304 (JIS))

Needle Valve

Connection: Rc1/4 or 1/4FNPT

Material: SUS316 (JIS)

Part No.	Description
E7046EC	RC 1/4 ∅6 / ∅4 TUBE joint: SUS304 (JIS)
E7046EN	1/4 NPT, 1/4 TUBE joint: SUS304 (JIS)

T2.8E.EPS

E7046EC ; Piping connections, Rc1/4(∗ part) or Rc1/4(∗∗ part),
E7046EN ; Piping connections,1/4NPT female (∗ part) or 1/4NTP male(∗∗ part)

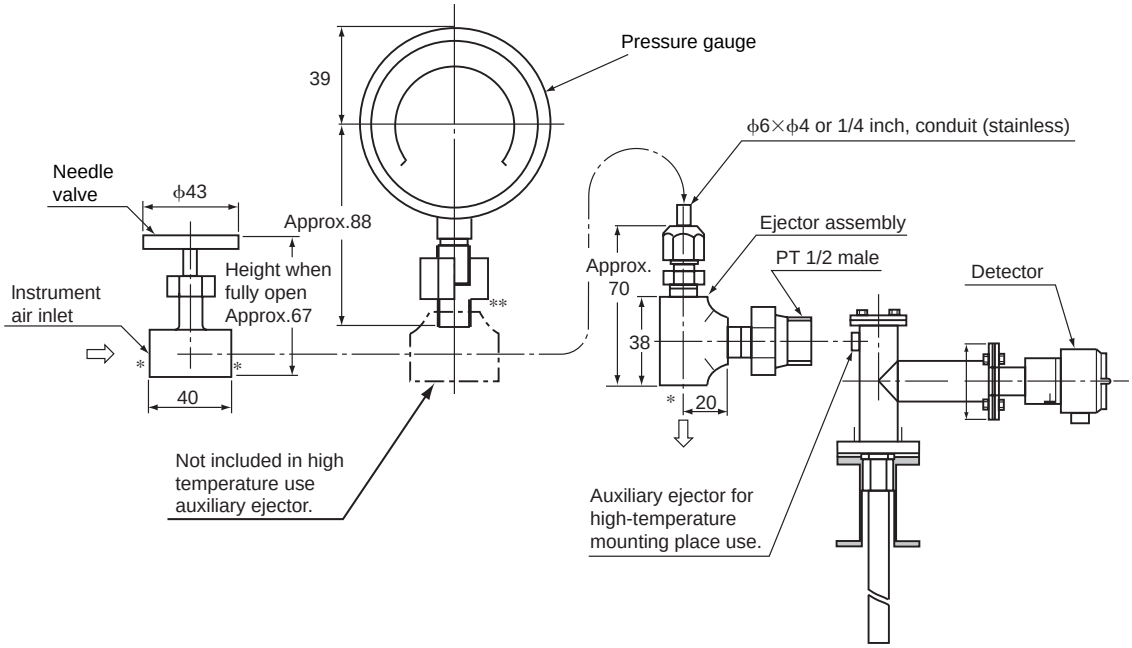

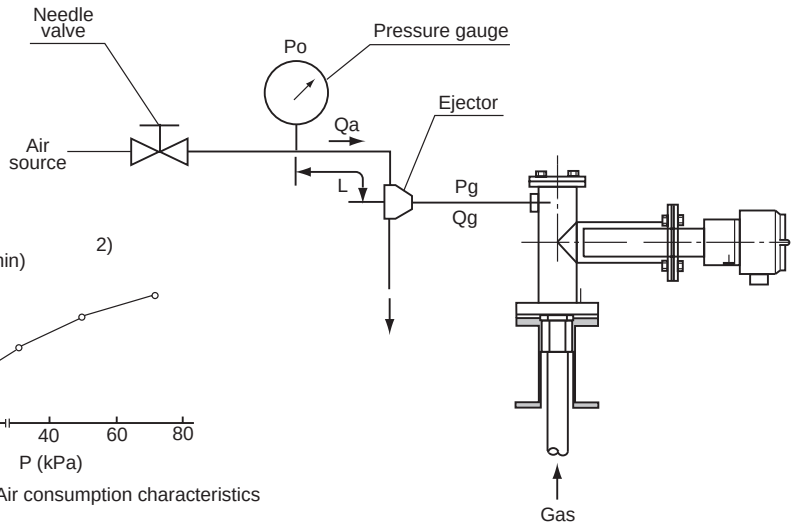

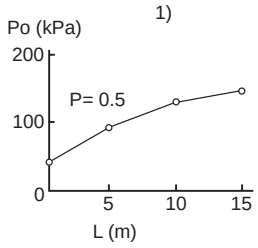

Pressure setting characteristics

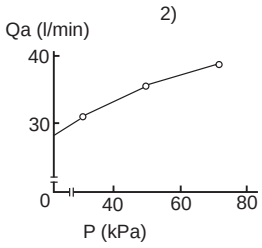

Air consumption characteristics

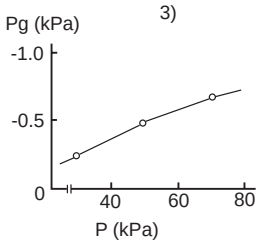

Suction pressure characteristics

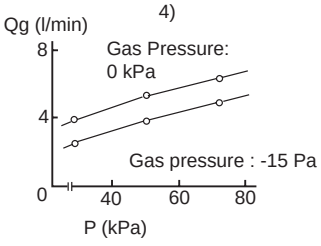

Suction flow characteristics

Po	(kPa)	: Pressure setting
P	(kPa)	: Drive pressure (at the ejector entrance)
Pg	(kPa)	: Suction pressure
Qa	(l/min)	: Air consumption
Qg	(l/min)	: Suction flow
L	(m)	: Distance between the ejector and the pressure gauge

F2.9E.EPS

(Note) Pipes and connectors are not provided.

< Pressure setting for the auxiliary ejector for high-temperature use >
Pressure supply for the auxiliary ejector should be set so that the suction flow of the measured gas becomes approximately 5 l/min.

To set this, proceed as follows:

(1) In Graph 4, draw a horizontal line from the 5 l/min point. on the vertical axis (Suction flow: Qg) toward the gas pressure line to be used, to find the point of intersection.
Draw a line vertically down from the point of intersection to the axis to find the drive pressure, P (at the ejector entrance).
(2) In Graph 1, determine Po (pressure setting) from L (the distance between the ejector and the pressure gauge).
(3) Open the needle valve to supply air for the ejector to the pressure gauge until it indicates the pressure setting, Po.

Note

Qg (the suction flow) may require change according to the conditions of use. Refer to Section 3.2.2 and Section 4.1.4 for details.

Graph explanation
1) Graph 1 is to compensate for pressure loss in piping between the ejector and the pressure gauge, and find Po (pressure setting).
2) Graph 2 shows correlation between P (drive pressure) and Qa (air consumption).
3) Graph 3 shows correlation between P (drive pressure) and Pg (suction pressure; when the measured gas inlet of the ejector is closed).
4) Graph 4 shows correlation between P (drive pressure) and Qg (suction flow) for each gas pressure.

2.7.3 Stop Valve (Part No. L9852CB or G7016XH)

This valve mounted on the calibration gas line in the system to allow for one-touch calibration. This is applies to the system configuration shown for system 1 insection 1.

Standard Specifications
Connection: Rc 1/4 or 1/4 FNPT

Material: SUS 316 (JIS)

Weight: Approx. 80 g

Part No.	Description
L9852CB	Joint: RC 1/4, Material: SUS 316 (JIS)
G7016XH	Joint: 1/4 NPT, Material: SUS316 (JIS)

T2.9E.EPS

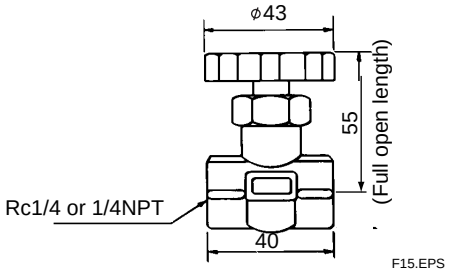

F15.EPS

2.7.4 Check Valve (Part No. K9292DN or K9292DS)

This valve is mounted on the calibration gas line (directly connected to the detector). This is applied to a system based on the (System 2 and 3) system configuration .

This valve prevents the process gas from entering the calibration gas line. Although it functions as a stop valve, operation is easier than a stop valve as it does not require opening/closing at each calibration.

Screw a check valve, instead of a stop valve into the calibration gas inlet of the detector.

Standard Specifications

Connection: Rc1/4 or 1/4FNPT

Material: SUS304 (JIS)

Pressure: 70 kPa G or more and 350 kPa G or less

Weight: Approx. 40 g

Part No.	Description
K9292DN	Joint: RC 1/4, Material: SUS304 (JIS)
K9292DS	Joint: 1/4 NPT, Material: SUS304 (JIS)

T2.10E.EPS

K9292DN : Rc 1/4 (A part), R 1/4(B part)
K9292DS : 1/4FNPT (A part),1/4NPT(Male)(B part)

Unit : mm

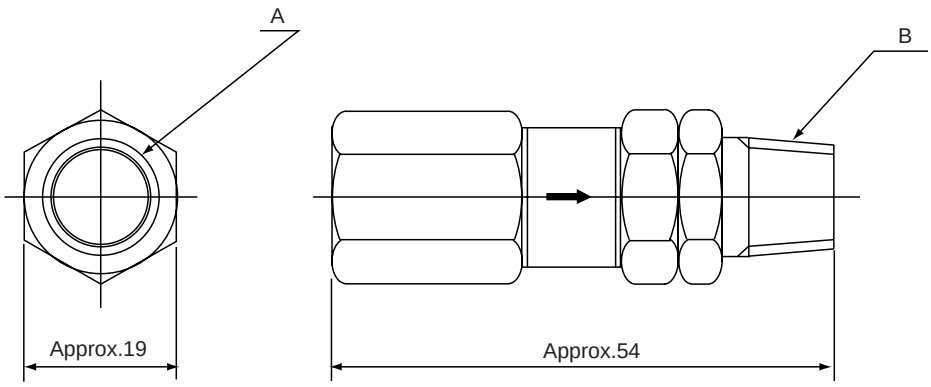

F2.11E.EPS

2.7.5 Air Set (Part No. G7011XF or E7040EL)

This set is used to lower the pressure when instrument air is used as the reference and span gases.

Standard Specifications

Primary Pressure: Max. 2 MPa G

Secondary Pressure: 9.8 to 196 kPa G

Connection: Rc1/4 or 1/4FNPT (includes joint adapter)

Weight: Approx.1 kg

Part No.	Description
G7011XF	Joint: Rc 1/4, Material: Aluminum
E7040EL	Joint: 1/4 NPT (F) , Material: Aluminum with adapter

T2.11E.EPS

Unit : mm

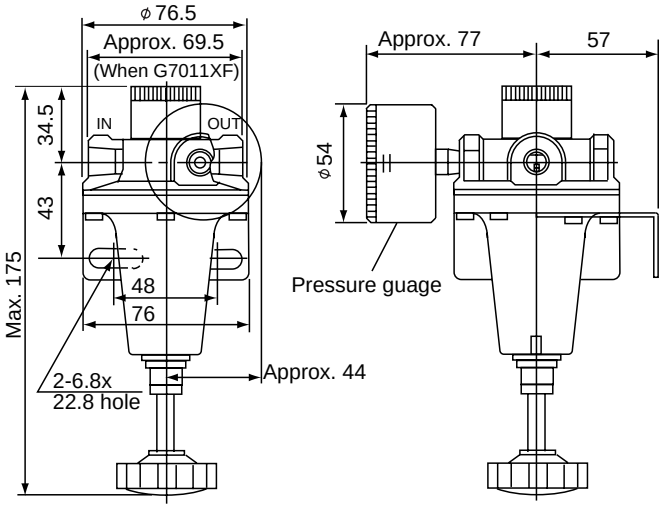

G7011XF: Piping connection (IN: Primary side, OUT: Secondary side), Rc1/4
E7040EL: Piping connection (IN: Primary side, OUT: Secondary side), 1/4NPT

F2.12E.EPS

2.7.6 Zero Gas Cylinder (Part No. G7001ZC)

The gas from this cylinder is used as the calibration zero gas and detector purge gas.

Standard Specifications

Capacity: 3.4 l

Filled pressure: 9.8 to 12 MPa G

Composition: 0.95 to 1.0 vol% O_2 in N_2

(Note) Export of such high pressure filled gas cylinder to most countries is prohibited or restricted.

Unit : mm

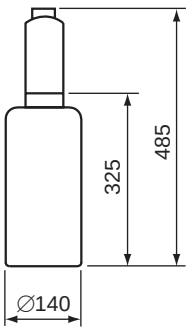

Weight : Approx. 6 kg

F213E.EPS

2.7.7 Cylinder Regulator Valve (Part No. G7013XF or G7014XF)

This regulator valve is used with the zero gas cylinders.

Standard Specifications

Pressure gauge: Primary 0 to 25 MPa G, Secondary 0 to 0.5 MPa G

Connection: Inlet W22 14 threads, right hand screw Outlet Rc1/4 or 1/4FNPT

Material: Brass body

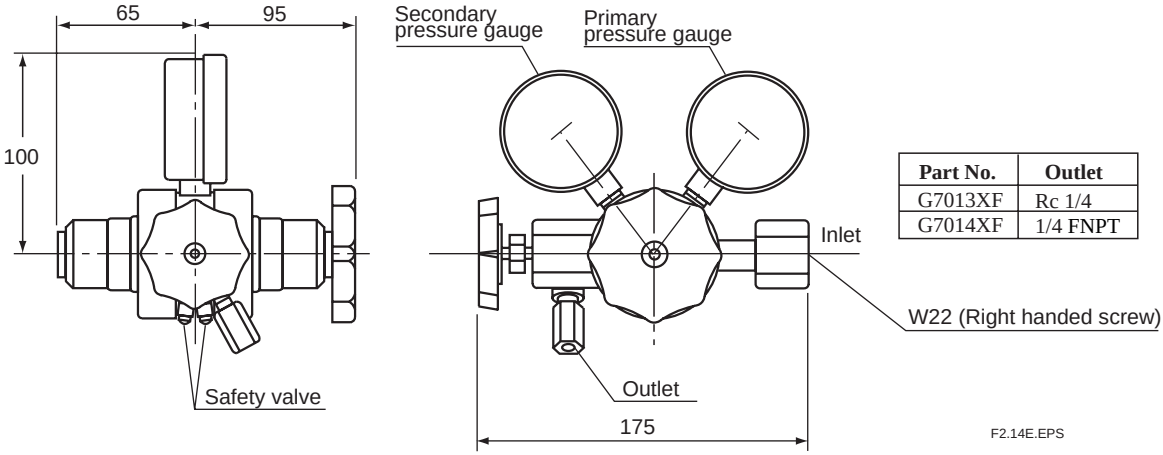

Part No.	Outlet
G7013XF	Rc 1/4
G7014XF	1/4 FNPT

2.7.8 Calibration Gas Unit Case (Part No. E7044KF)

This case is used to store the zero gas cylinders.

Standard Specifications

Case Paint: Baked epoxy resin, Jade green (Munsell 7.5 BG 4/1.5)

Installation: 2B pipe mounting

Material: SPCC (Cold rolled steel sheet)

Weight: 3.6 kg, Approx. 10 kg with gas cylinder

(Note) Export of such high pressure filled gas cylinder to most countries prohibited or restricted.

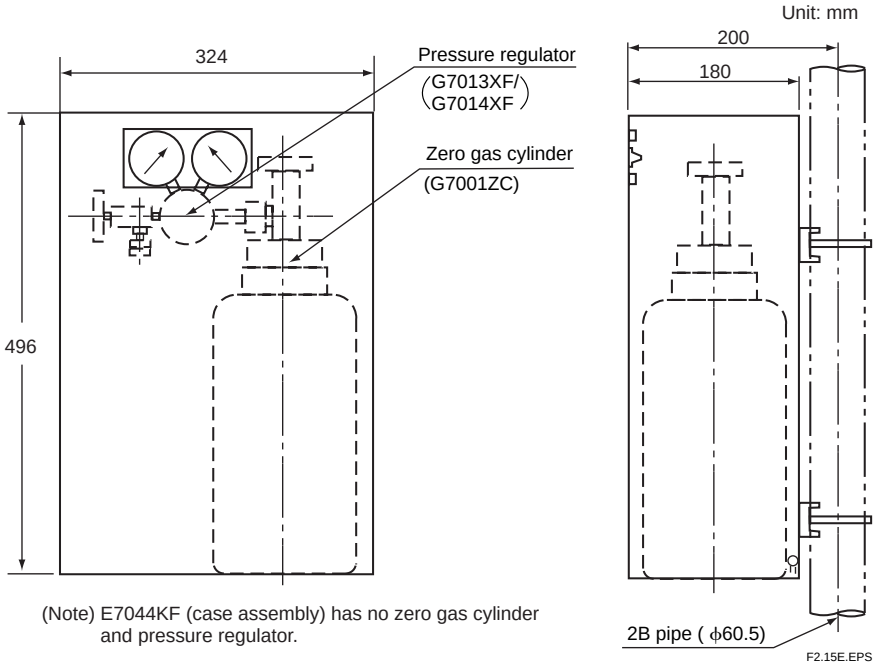

(Note) E7044KF (case assembly) has no zero gas cylinder and pressure regulator.

2.7.9 Model ZR22A Heater Assembly

Model	Suffix code	Option code	Description
ZR22A			Heater Assembly for ZR22G
Length (∗1)	-015		0.15 m
	-040		0.4 m
	-070		0.7 m
	-100		1 m
	-150		1.5 m
	-200		2 m
	-250		2.5 m
	-300		3 m
JIg for change	-A		with Jig
	-N		None
	-A		Always -A

T2.12E.EPS

(∗1) Suffix code of length should be selected as same as ZR22G installed.
∗ The heater is made of ceramic, do not drop or subject it to pressure stress.

● External Dimensions

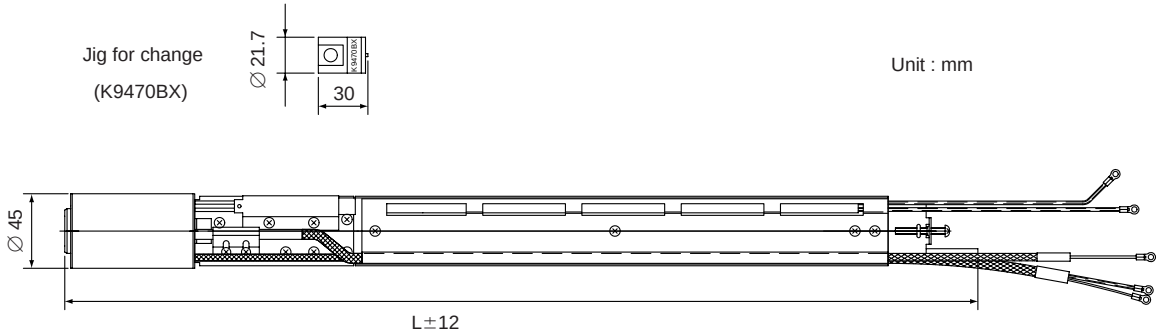

L length

Model & Code	L	Weight (kg)
ZR22A-015	302	Approx. 0.5
ZR22A-040	552	Approx. 0.8
ZR22A-070	852	Approx. 1.2
ZR22A-100	1152	Approx. 1.6
ZR22A-150	1652	Approx. 2.2
ZR22A-200	2152	Approx. 2.8
ZR22A-250	2652	Approx. 3.4
ZR22A-300	3152	Approx. 4.0

F2.16E.EPS

3. Installation

This chapter describes installation of the following equipment:

Ssction 3.1	Detector (except model ZR22G-015)
Ssction 3.2	Detector (model ZR22G-015)
Ssction 3.3	Converter
Ssction 3.4	ZA8F Flow Setting Unit
Ssction 3.5	ZR40H Automatic Calibration Unit
Ssction 3.6	Calibration Gas Unit Case (E7044KF)

3.1 Installation of the Detector

3.1.1 Location

The following should be taken into consideration when installing the detector:

(1) Easy and safe access to the detector for checking and maintenance work.
(2) Ambient temperature of not more than 150° C, and the terminal box should not affected by radiant heat.
(3) A clean environment without any corrosive gases.

CAUTION

- A natural convection type detector (model ZR22G-□-□-□-C), which uses ambient air as reference gas, requires that the ambient oxygen concentration be constant.

(4) No vibration.
(5) The measurement gas satisfies the specifications described in Chapter 2.
(6) No measured gas-pressure fluctuations.

3.1.2 Probe Insertion Hole

Includes those analyzers equipped with a probe supporter and probe protector.

When preparing the probe insertion hole, the following should be taken into consideration:

CAUTION

- The outside dimension of detector may vary depending on its options. Use a pipe that is large enough for the detector. Refer to Figure 3.1 for the dimensions.
- If the detector is mounted holizontally, the calibration gas inlet and reference gas inlet shuld face downwards.
- When using the detector with pressure compensation, ensure that the flange gasket does not block the reference air outlet on the detector flange. If the flange gasket blocks the outlet, the detector cannot conduct pressure compensation. Where necessary, make a notch in the flange gasket. Confirm the outside dimensions of the detector in Chapter 3.8 before installation.
- The sensor (zirconia cell) at the probe tip may deteriorate due to thermal shock if water drops are allowed to fall on it, as it is always at high temperature.

(1) Do not mount the probe with the tip higher than the probe base.
(2) If the probe length is 2.5 meters or more, the detector should be mounted vertically (no more than a 5° tilt).
(3) The detector probe should be mounted at right angles to the measurement gas flow or the probe tip should point downstream.

Figure 3.1 illustrates an example of the probe insertion hole.

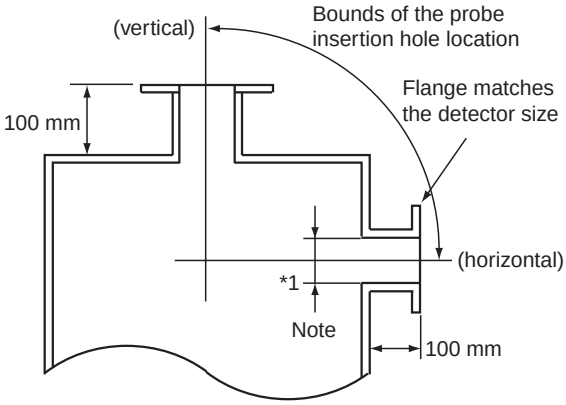

*1

Type	Outside diameter of detector
Standard	50.8 mm in diameter (Note)
With dust filter	51 mm in diameter (Note)
With probe protector	60.5 mm in diameter (Note)

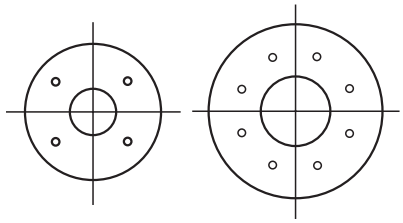

(Note)
When using the detector with pressure compensation, ensure that the flange gasket does not block the reference air outlet on the detector flange. If the flange gasket blocks the outlet, the detector cannot perform pressure compensation. Where necessary, make a notch in the flange gasket. Confirm the outside dimensions of the detector in Chapter 3.8 before installation.

F3.1E.EPS

Figure 3.1 Example of forming probe insertion hole

3.1.3 Installation of the Detector

CAUTION

- The cell (sensor) at the tip of the detector is made of ceramic (zirconia). Do not drop the detector, as impact will damage it.
- A gasket should be used between the flanges to prevent gas leakage. The gasket material should be heatproof and corrosion-proof, suited to the characteristics of the measured gas.

The following should be taken into consideration when mounting the general-use detector:

<General-use detector>

(1) Make sure that the cell mounting screws (four) at the probe tip are not loose. If a dust filter (see Section 2.8.1) is used, make sure it is properly attached to the detector. Refer to Section 3.1.4 for installation of the dust filter.
(2) Where the detector is mounted horizontally, the calibration gas inlet and the reference gas inlet should face downward.

3.1.4 Installation of the Dust Filter(Part No K9471UA)

CAUTION

- The dust filter is used to protect the Zirconia sensor from corrosive dust or a high concentration of dust such as in utility boilers and concrete kilns. If a filter is used in combustion systems other than these, it may have adverse effects such as response delay. These combustion conditions should be examined carefully before using a filter.
- The dust filter requires gas flow of 1 m/sec. or faster at the front surface of the filter (K9471UA).

When you specify option code /F1, the detector is shipped with the dust filter mounted. Follow this procedure replace the filter on the detector . It is recommended that you read Chapter 11 prior to filter mounting, for it is necessary to be familiar with the detector's construction, especially the sensor assembly.

(1) Mount the dust filter assembly by putting it on the end of the detector and screw the assembly clockwise. Put a hook pin wrench (K9471UX), 52 to 55 in diameter, into the hole on the assembly to fasten or remove it.
Apply a heat-resistant coating (see Note 1) to the threads on the detector.
When remounting Filter assembly after having once removed it from the detector, reapply the heat-resistant coating.

Note 1: As the detector is heated to 700° C, it is recommended to use heat-resistant coating on the threads to prevent seizing up. Name of the heat-resistant coating material: NEVER SEIZE NICKEL SPECIAL".

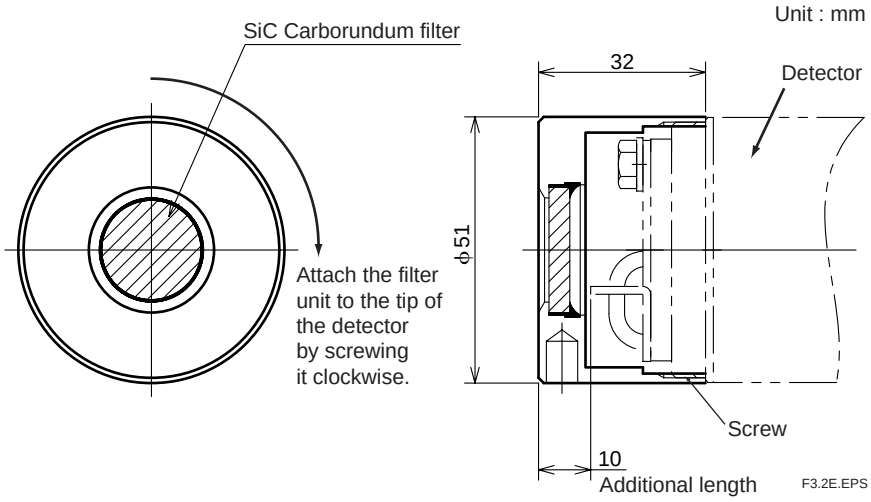

Figure 3.2 Installation of the dust filter

<Detector with a probe protector (Model ZO21R-L-□□□-□ *B for enhance forth>
The detector is used with a probe protector to support the probe (ZR22G) when the probe length is 2.5m or more and it is mounted horizontally.

(1) Put a gasket (provided by the user) between the flanges, and mount the probe protector in the probe insertion hole.
(2) Make sure that the cell assembly mounting screws (four) at the probe tip are not loose.
(3) Mount the detector so that the reference gas and calibration gas inlet faces downward.

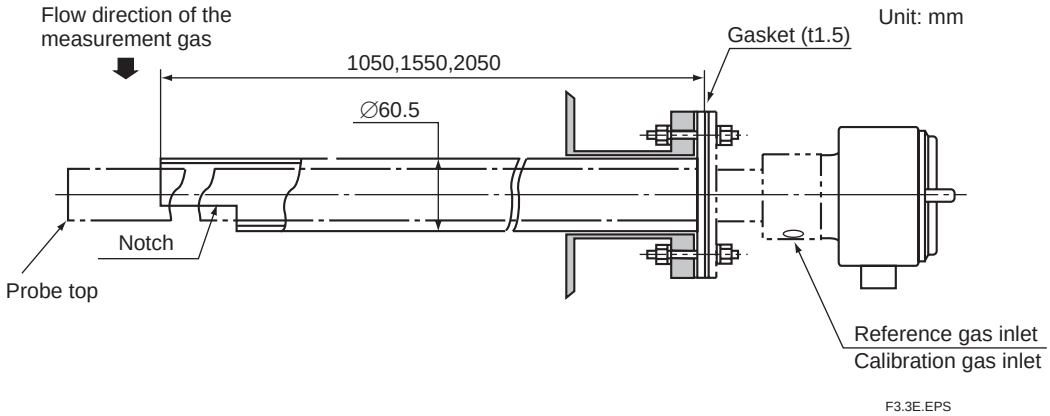

Figure 3.3 Probe protector (supporting the mounting strength)

<Detector with a probe protector (Model ZO21R-L-□□□-□ *B for dust wear prodect>
The detector is used with a probe protector to prevent the sensor from being worn by dust particles when there is a high concentration of dust and gas flow exceeds 10m/s (fine-carbon boiler or fluid-bed furnace).

(1) Put a gasket (provided by the user) between the flanges, and mount the probe protector in the probe insertion hole. The probe protector should be installed so that the notch is downstream of the measurement gas flow.
(2) Make sure that the cell assembly mounting screws (four) at the probe tip are not loose.
(3) Where the detector is mounted horizontally, the reference gas and calibration gas inlet should face downward.

CAUTION

When the probe protector is used in the Zirconia Oxygen Analyzer version with pressure compensation (-P), instrument air leaking from the probe protector may affect the measured value.

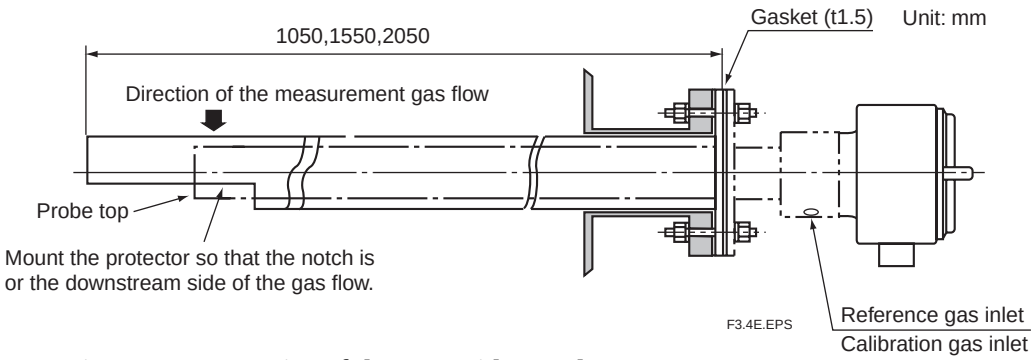

Figure 3.4 Mounting of detector with a probe protector

3.2 Installation of the Detector (Model ZR22G-015)

3.2.1 Installation Location

This model detector is used with the High-temperature Probe Adapter (Model ZO21P-H) when the temperature of sample gas exceeds 700° C, or when it is required due to maintenance spaces.

The following should be taken into consideration when installing the detector:

(1) Easy and safe access to the detector for checking and maintenance work.
(2) Ambient temperature of not more than 150° C and the terminal box should not be exposed to radiant heat.
(3) A clean environment without any corrosive gases.
(4) No vibration.
(5) The measured gas should satisfy the specifications described in Chapter 2.

3.2.2 Usage of the High-temperature Probe Adapter (Model ZO21P-H)

During analysis, the surface temperature of the probe adapter should be within the range from the dew point of the measured gas and 300° C to prevent ejector clogging, gasket deterioration or bolt scoring.

Where the dew point of the measured gas is not known, keep within the range 200° C to 300° C.

The temperature shall be measured at the probe in the probe adapter and the surface of the blind flange at the opposite side.

When the surface temperature is not within the above range, the following measures can be taken to change the temperature.

<When the surface temperature exceeds 300°C>

(1) When the furnace pressure is negative, lower the pressure setting to reduce induction flow of the measurement gas.
Refer to Section 2.7.2, Auxiliary Ejector for High Temperature, for the setting of induction flow.
When you reduce induction flow, ensure that the ejector inducts air when the furnace pressure fluctuates.
(2) When the furnace pressure is positive, close the needle valve for the sample gas outlet to reduce the exhaust gas flow. Refer to Section 4.1.4, Piping to the High-temperature Probe Adapter.
(3) When the probe adapter is surrounded by a heat insulator, remove the heat insulator. Ensure that the temperature of the probe adapter does not fall below the dew point of the gas in winter.
(4) To prevent temperature rises due to radiant heat, insert heat insulator between the wall of the furnace and the probe adapter.
(5) To prevent temperature rises from thermal conduction, place the mounting flange as far from the wall of the furnace as possible.

<When the surface temperature is less than 200°C or the dew point of the measurement gas>

(1) When the furnace pressure is negative, raise the analyzer pressure to increase induction flow of the measurement gas.
Refer to Section 2.7.2, Auxiliary Ejector for High-temperature Use, for the setting of induction flow.
If there is much dust in the gas, the ejector may become clogg is induction flow increases.

(2) When the furnace pressure is positive, open the needle valve for the sample gas outlet to increase the gas flow.
Refer to Section 4.1.4, Piping to the High-temperature Probe Adapter.

(3) Warm the probe adapter. Refer to Section 4.2.4, Piping to the High-temperature Probe Adapter. Ensure that its temperature does not drop below freezing point in winter.

(4) When the surface temperature is still less than 200° C or the dew point of the measurement gas, even if the above measures have been taken, warm the probe adapter using a heat source such as steam.

3.2.3 Probe Insertion Hole

A high-temperature detector consists of a ZR22G-015 Detector and ZO21P High-temperature Probe Adapter. When forming the probe insertion hole, the following should be taken into consideration:

(1) If the probe is made of silicon carbide (SiC), the probe hole should be formed so that the probe is mounted vertically (no more than a 5° tilt).
(2) In the case where the probe is made of stainless steel and the probe adapter is to be mounted horizontally, the probe hole should be formed so that the probe tip is not higher than the probe base.

Figure 3.5 illustrates examples of the probe insertion hole.

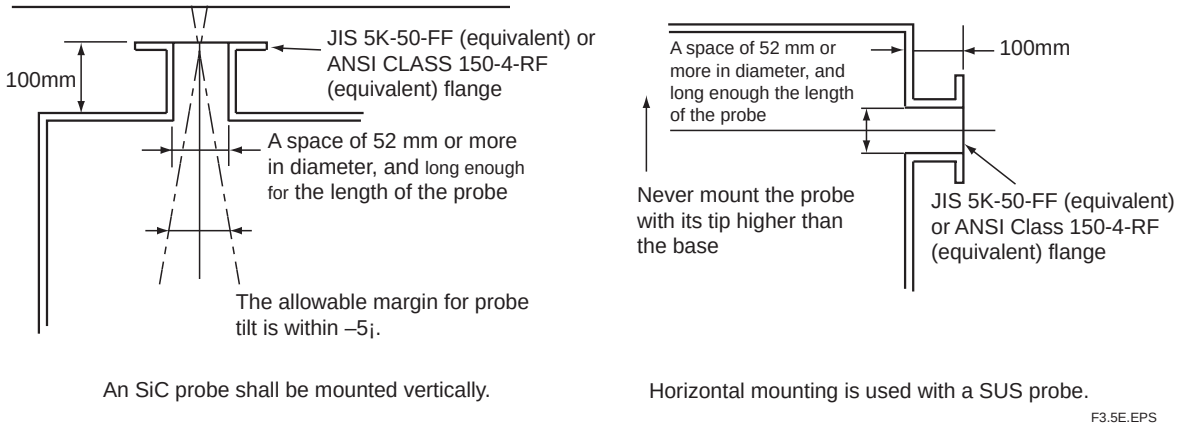

Figure 3.5 Examples of the probe insertion hole

3.2.4 Mounting of the High-Temperature Detector

Note

Ceramic (zirconia) is used in the sensor (cell) portion on the detector probe tip. Care should be taken not to drop the detector during installation.
The same applies to a probe made of silicon carbide (SiC).
A gasket should be used on the flange surface to prevent gas leakage. The gasket material should be selected depending on the characteristics of the measurement gas. It should be heatproof and corrosion-proof. The parts, which should be supplied by the user, are listed in Table 3.2.

Table 3.2 Accessories for mounting high-temperature probe adapter

Mounting flange specification	Accessory name	Number	Note
JIS 5K-50-FF (equivalent)	Gasket	1	Heatproof and corrosionproof
	Bolt (M12 by 50)	4	
	Nut (M12)	4	
	Washer (for M12)	8	
ANSI CLASS 150-RF (equivalent)	Gasket	1	Heatproof and corrosionproof
	Bolt (M16 by 60)	8	
	Nut (M16)	8	
	Washer (for M16)	16	

T3.2E.EPS

A high-temperature detector should be mounted as follows:

(1) It is recommended to mount the detector vertically. When it is impossible due to the physical arrangements and the detector is mounted horizontally, ensure that the probe tip be placed no higher than the probe base.
(2) When mounting a high-temperature probe adapter, be sure to insert a gasket between the flanges to prevent gas leakage. When the furnace pressure is negative, ensure that there is no leakage of air into the furnace.
(3) When mounting the detector in a position other than vertical, the cable inlet should face downward.
(4) When installing the detector in a low-temperature location such as in the open air, cover the probe adapter including the ejector with a heat insulator (e.g. ceramic wool) to keep it warm and to prevent condensation of drain on the ejector.

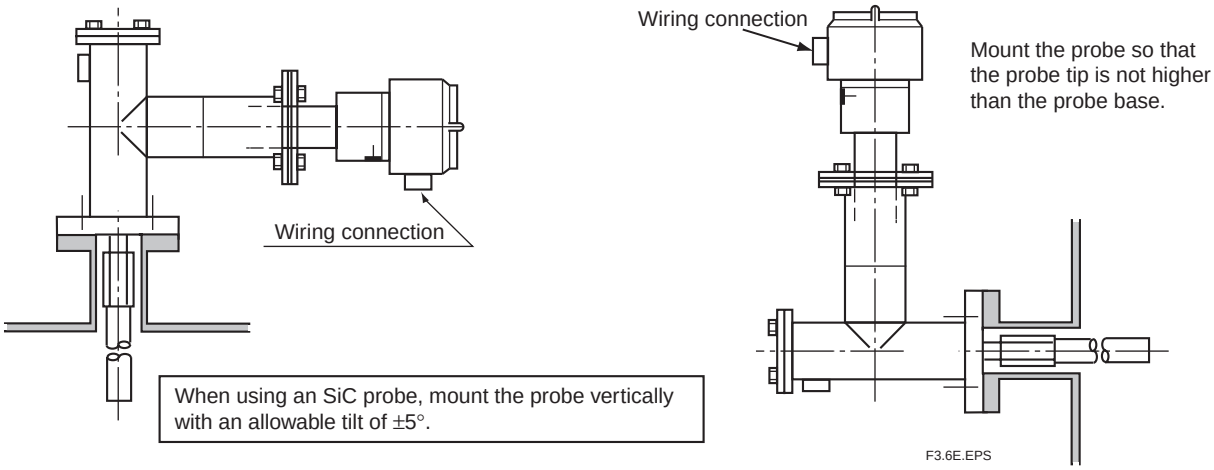

Figure 3.6 Mounting of the High-temperature Detector

3.3 Installation of the Converter

3.3.1 Location

The following should be taken into consideration when installing the converter:

(1) Readability of the indicated values of oxygen concentration or messages on the converter display.
Easy and safe access to the converter for operating keys on the panel.
(2) Easy and safe access to the converter for checking and maintenance work.
(3) An ambient temperature of not more than 55° C and little change in temperature (recommended within 15° C in a day).
(4) The normal ambient humidity (recommended between 40 to 75% RH) and without any corrosive gases.
(5) No vibration.
(6) Near to the detector.
(7) Not in direct rays of the sun. If the sun shines on the converter, prepare the hood (/H) or other appropriate sunshade.

3.3.2 Mounting of the Converter

The converter can be mounted on a pipe (nominal JIS 50A: O.D. 60.5 mm), a wall or a panel. The converter can be mounted at an angle to the vertical, however, it is recommended to mount it on a vertical plane.

Mount the converter as follows.

<Pipe Mounting>

(1) Prepare a vertical pipe of sufficient strength (nominal JIS 50A: O.D. 60.5 mm) for mounting the converter. (Converter weighs approximately 6 kg.)
(2) Mount the converter on the pipe. Fix it firmly on the pipe in the procedure described in Figure 3.7.

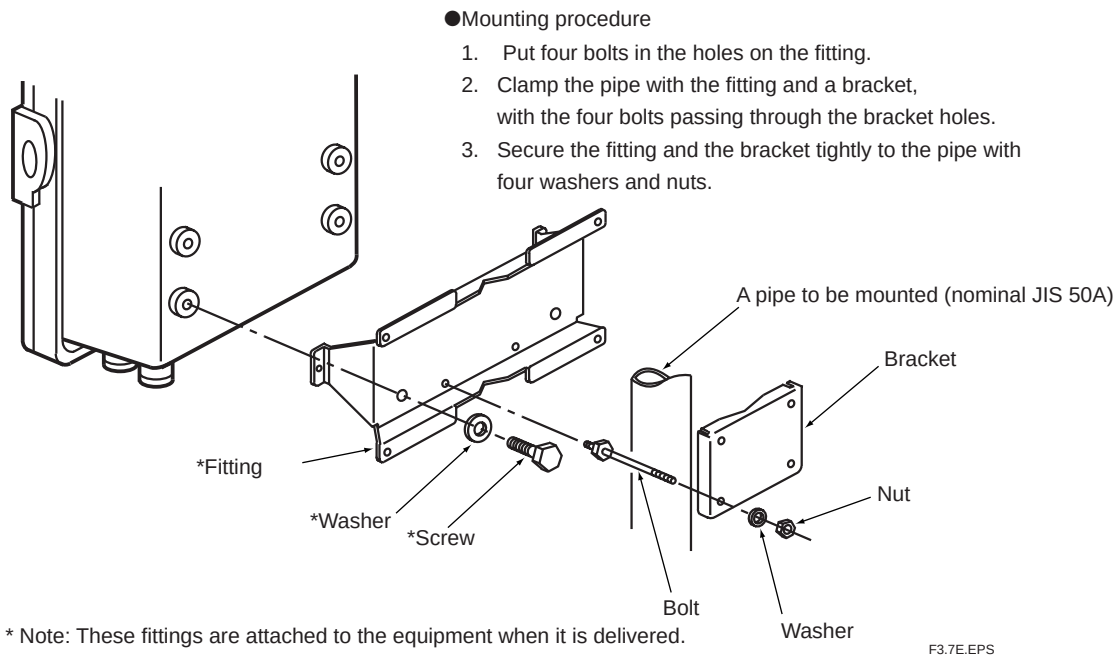

Figure 3.7 Pipe Mounting

<Wall Mounting>

(1) Drill mounting holes through the wall as shown in Figure 3.8.

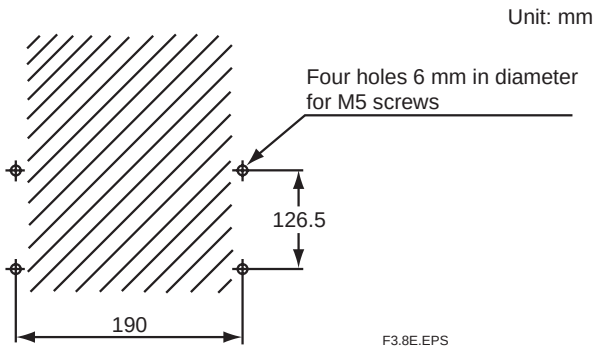

Figure 3.8 Mounting holes

(2) Mount the converter. Secure the converter on the wall using four screws.

Note: For wall mounting, the bracket and bolts are not used.

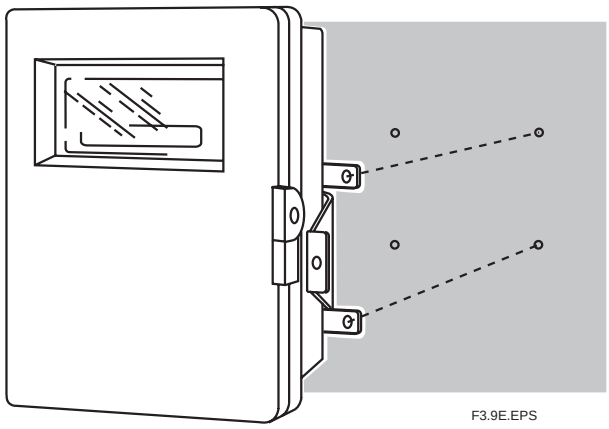

Figure 3.9 Wall Mounting

<Panel Mounting>

(1) Cut out the panel according to Figure 3.10.

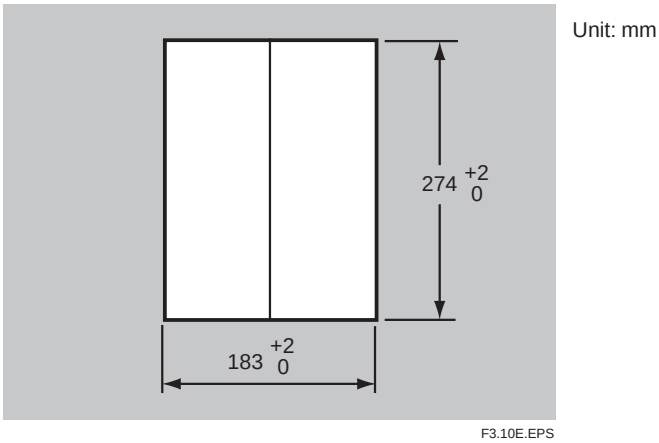

Figure 3.10 Panel cutout sizes

(2) Remove the fitting from the converter by loosening the four screws.

(3) Insert the converter case into the cutout hole of the panel.

(4) Attach the mounting fitting which is once removed in step (2) again to the converter.

(5) Firmly fix the converter to the panel. Fully tighten the two clamp screws to hold the panel with the fitting.

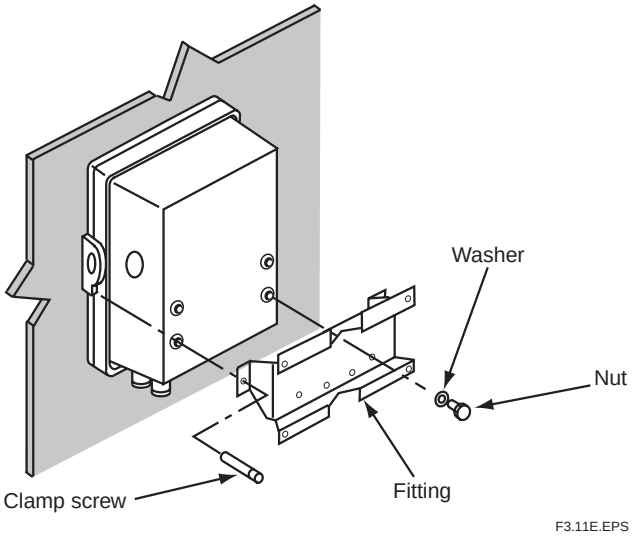

Figure 3.11 Panel mounting

3.4 Installation of ZA8F Flow Setting Unit

3.4.1 Location

The following should be taken into consideration:

(1) Easy access to the unit for checking and maintenance work.
(2) Near to the detector and the converter
(3) No corrosive gas.
(4) An ambient temperature of not more than 55° C and little changes of temperature.
(5) No vibration.
(6) Little exposure to rays of the sun or rain.

3.4.2 Mounting of ZA8F Flow Setting Unit

The flow setting unit can be mounted either on a pipe (nominal JIS 50A) or on a wall. It should be positioned vertically so that the flowmeter works correctly.

<Pipe Mounting>

(1) Prepare a vertical pipe of sufficient strength (nominal JIS 50A: O.D. 60.5 mm) for mounting the flow setting unit. (The unit weighs approximately 2 to 3.5 kg.)
(2) Mount the flow setting unit on the pipe by tightening the nuts with the U-bolt so that the metal fitting is firmly attached to the pipe.

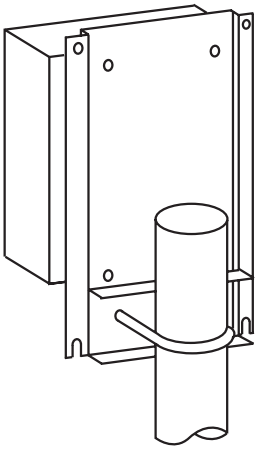

F3.12E.EPS

Figure 3.12 Pipe Mounting

<Wall Mounting>

(1) Make a hole in the wall as illustrated in Figure 3.13.

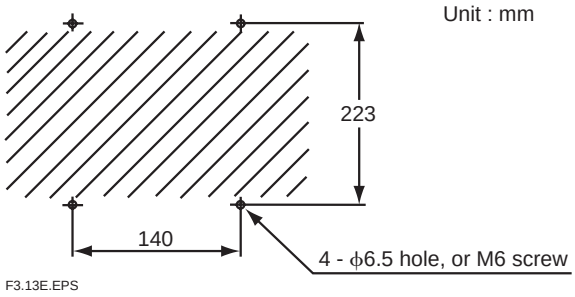

Figure 3.13 Mounting holes

(2) Mount the flow setting unit. Remove the pipe mounting parts from the mount fittings of the flow setting unit and attach the unit securely on the wall with four screws.

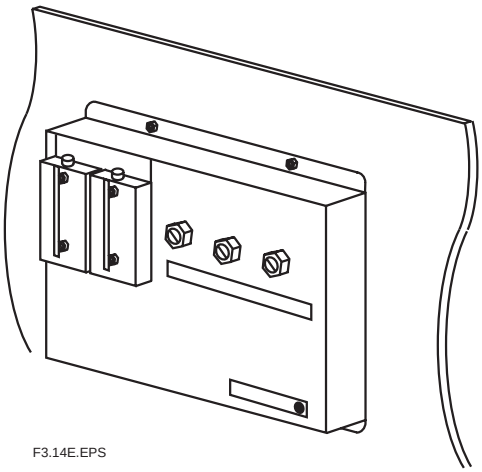

Figure 3.14 Wall mounting

3.5 Installation of ZR40H Automatic Calibration Unit

3.5.1 Location

The following should be taken into consideration:

(1) Easy access to the unit for checking and maintenance work.
(2) Near to the detector and the converter
(3) No corrosive gas.
(4) An ambient temperature of not more than 55° C and little change of temperature.
(5) No vibration.
(6) Little exposure to rays of the sun or rain.

3.5.2 Mounting of ZR40H Automatic Calibration Unit

The Automatic Calibration Unit can be mounted either on a pipe (nominal JIS 50A) or on a wall. It should be positioned vertically so that the flowmeter works correctly.

<Pipe Mounting>

(1) Prepare a vertical pipe of sufficient strength (nominal JIS 50A: O.D. 60.5 mm) for mounting of Automatic Calibration Unit. (The unit weights approximately 3.5 kg.)
(2) Mount the Automatic Calibration Unit on the pipe by tightening the nuts with the U-bolt so that the metal fitting is firmly attached to the pipe.

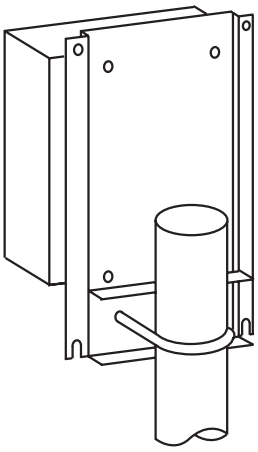

F3.12E.EPS

Figure 3.15 Pipe Mounting

<Wall Mounting>

(1) Make a hole in the wall as illustrated in Figure 3.16.

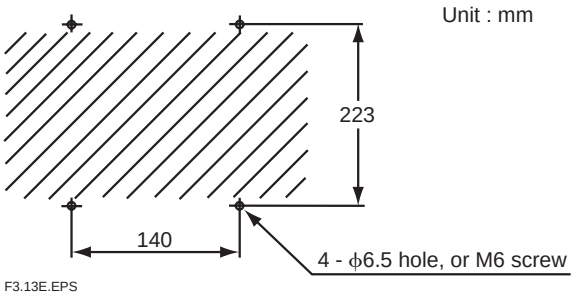

Figure 3.16 Mounting holes

(2) Mount the Automatic Calibration Unit. Remove the pipe mounting parts from the mount fittings of the flow setting unit and attach the unit on the wall with four screws.
When setting it with M5 bolts, use washers.

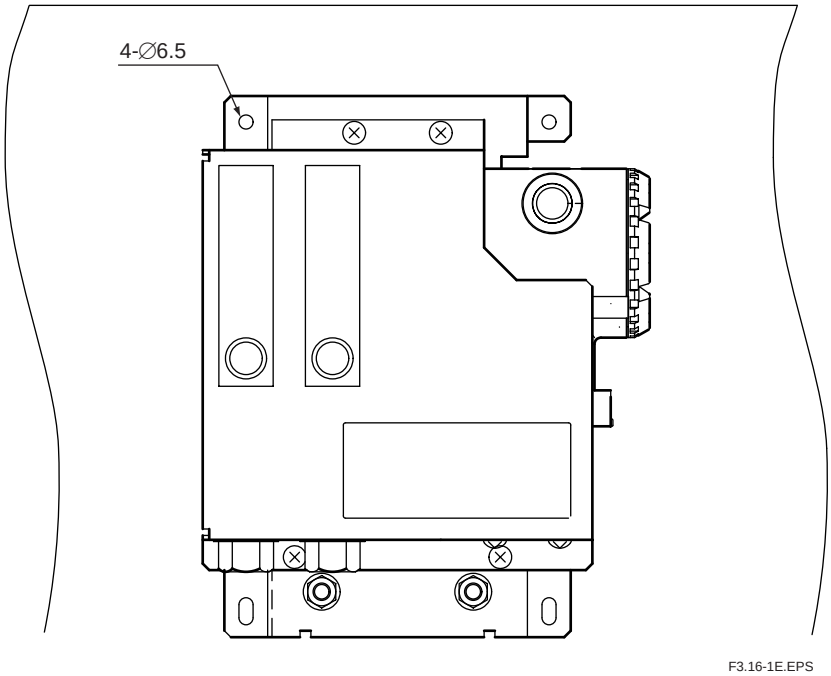

Figure 3.17 Wall Mounting

3.6 Installation of the Calibration Gas Unit Case (E7044KF)

The calibration gas unit case is used to store the G7001ZC zero gas cylinders.

3.6.1 Location

The following should be taken into consideration:

(1) Easy access for cylinder replacement
(2) Easy access for checking
(3) Near to the detector and converter as well as the flow setting unit.
(4) The temperature of the case should not exceed 40° C due to rays of the sun or radiated heat.
(5) No vibration

3.6.2 Mounting

Mount the calibration gas unit case on a pipe (nominal JIS 50A) as follows:

(1) Prepare a vertical pipe of sufficient strength (nominal JIS 50A: O.D. 60.5 mm) for mounting the flow setting unit. (The sum of the calibration gas unit case and the calibration gas cylinder weighs approximately 4.2 kg.)
(2) Mount the unit case on the pipe by tightening the nuts with the U-bolt so that the metal fitting is firmly attached to the pipe.

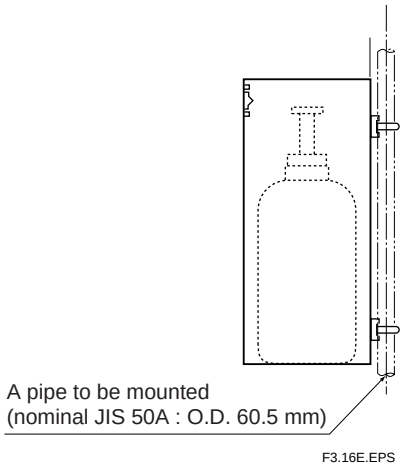

Figure 3.18 Pipe Mounting

3.7 Insulation Resistance Test

Even if the testing voltage is not so great that it causes dielectric breakdown, testing may cause deterioration in insulation and a possible safety hazard. Therefore, conduct this test only when it is necessary.

The applied voltage for this test shall be 500 V DC or less. The voltage shall be applied for as short a time as practicable to confirm that insulation resistance is 20 MΩ or more.

Remove wiring from the converter and the detector.

1. Remove the jumper plate located between terminal G and the protective grounding terminal.
2. Connect crossover wiring between L and N.
3. Connect an insulation resistance tester (with its power OFF). Connect (+) terminal to the crossover wiring, and (-) terminal to ground.
4. Turn the insulation resistance tester ON and measure the insulation resistance.
5. After testing, remove the tester and connect a 100 kΩ resistance between the crossover wiring and ground, to discharge.
6. Testing between the heater terminal and ground, contact output terminal and ground, analog output/input terminal and ground can be conducted in the same manner.
7. Although contact input terminals are isolated, insulation resistance test cannot be conducted because the breakdown voltage of the surge-preventing arrester between the terminal and ground is low.
8. After conducting all the tests, replace the jumper plate as it was.

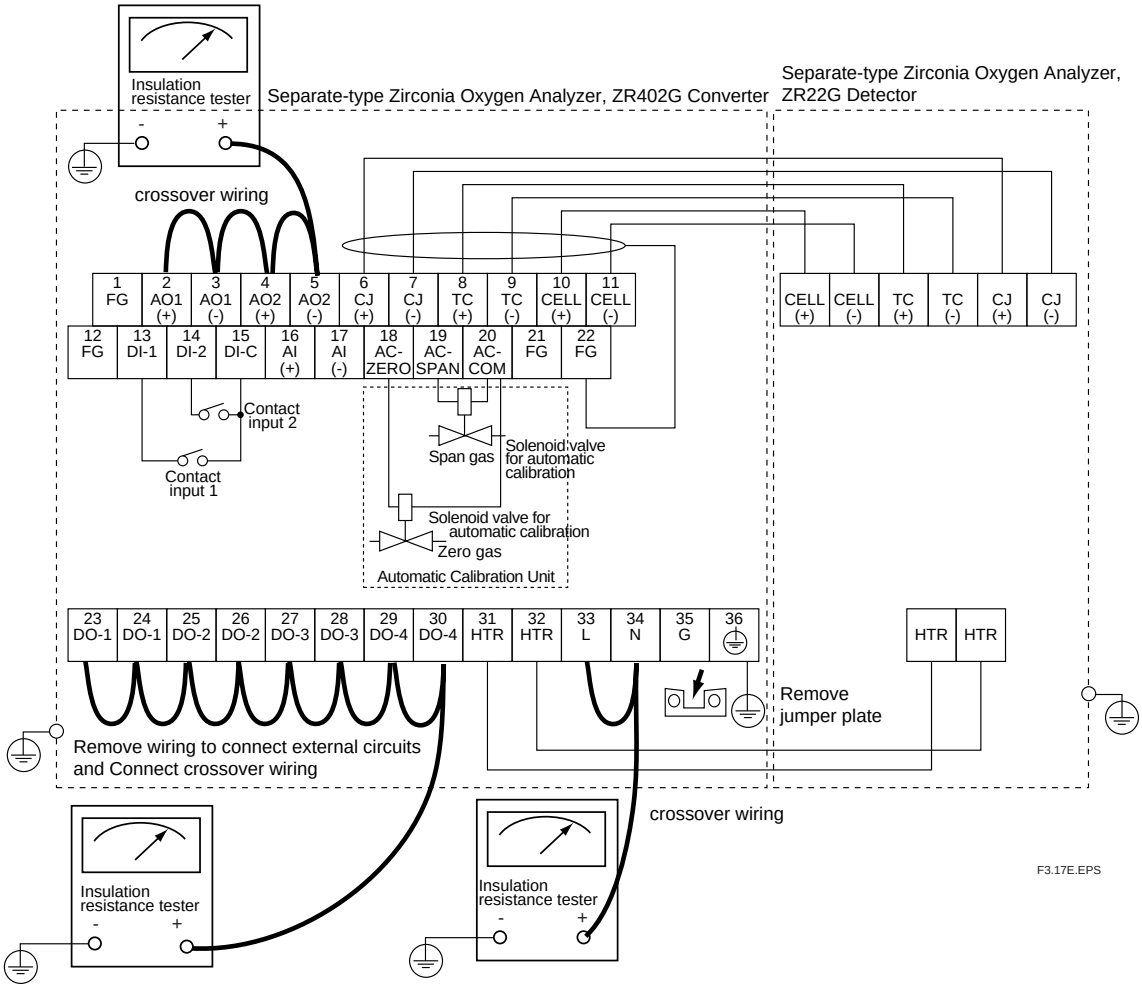

3.8 External Dimensions of Detectors with Pressure Compensation

●ZR22G-□□□-□-A-P
Flange ; Equivalent to ANSI CLASS150-2-RF

Unit: mm

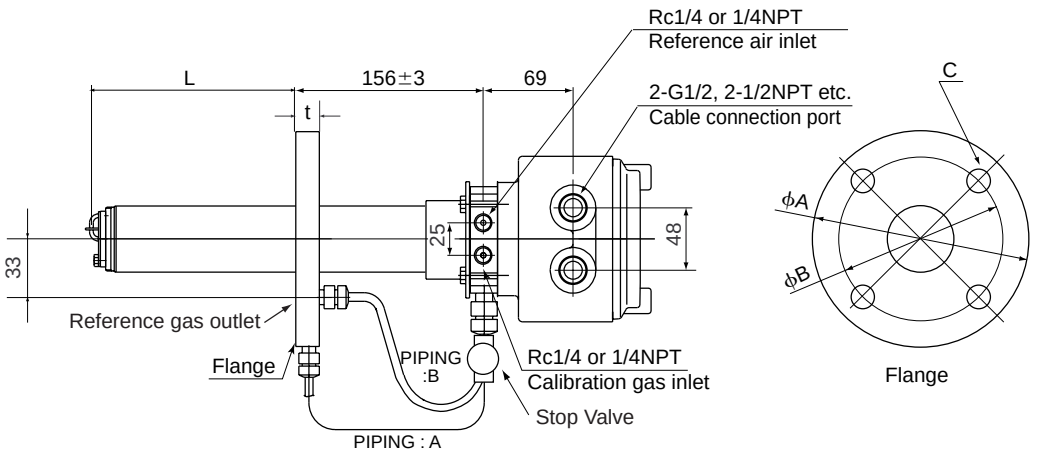

	Model, Code	L	Flange					PIPING	Weight (kg)
			Specification	A	B	C	t		
	ZR22G-040-□-A	400	Equivalent to ANSI CLASS150 -2-RF	152.4	120.6	4-ϕ19	19	A	Approx. 6
	ZR22G-070-□-A	700							Approx. 7
	ZR22G-100-□-A	1000							Approx. 8
	ZR22G-150-□-A	1500							Approx. 10
	ZR22G-200-□-A	2000							Approx. 12
	ZR22G-250-□-A	2500							Approx. 14
	ZR22G-300-□-A	3000							Approx. 15
	ZR22G-360-□-A	3600							Approx. 17
	ZR22G-420-□-A	4200							Approx. 19
	ZR22G-480-□-A	4800							Approx. 21
	ZR22G-540-□-A	5400							Approx. 23

F3.8.1E.EPS

●ZR22G-□□□-□-B-P
Flange ; Equivalent to ANSI CLASS150-3-RF

Unit: mm

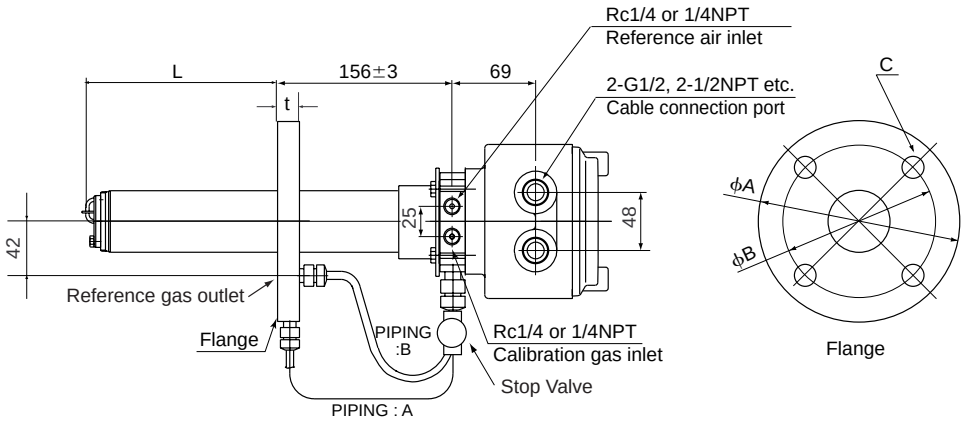

	Model, Code	L	Flange					PIPING	Weight (kg)
			Specification	A	B	C	t		
	ZR22G-040-□-B	400	Equivalent to ANSI CLASS150 -3-RF	190.5	152.4	4-ϕ19	24	B	Approx. 9
	ZR22G-070-□-B	700							Approx. 10
	ZR22G-100-□-B	1000							Approx. 11
	ZR22G-150-□-B	1500							Approx. 13
	ZR22G-200-□-B	2000							Approx. 14
	ZR22G-250-□-B	2500							Approx. 16
	ZR22G-300-□-B	3000							Approx. 18
	ZR22G-360-□-B	3600							Approx. 20
	ZR22G-420-□-B	4200							Approx. 22
	ZR22G-480-□-B	4800							Approx. 24
	ZR22G-540-□-B	5400							Approx. 26

F3.8.2E.EPS

●ZR22G-□□□-□-C-P
Flange ; Equivalent to ANSI CLASS150-4-RF

Unit: mm

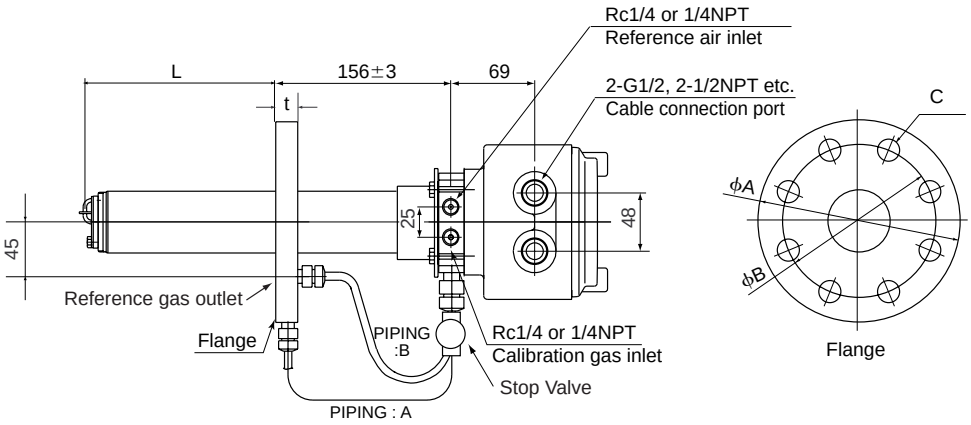

	Model, Code	L	Flange					PIPING	Weight (kg)
			Specification	A	B	C	t		
	ZR22G-040-□-C	400	Equivalent to ANSI CLASS150 -4-RF	228.6	190.5	8-ϕ19	24	B	Approx. 11
	ZR22G-070-□-C	700							Approx. 12
	ZR22G-100-□-C	1000							Approx. 13
	ZR22G-150-□-C	1500							Approx. 15
	ZR22G-200-□-C	2000							Approx. 17
	ZR22G-250-□-C	2500							Approx. 18
	ZR22G-300-□-C	3000							Approx. 20
	ZR22G-360-□-C	3600							Approx. 22
	ZR22G-420-□-C	4200							Approx. 24
	ZR22G-480-□-C	4800							Approx. 26
	ZR22G-540-□-C	5400							Approx. 28

F3.8.3E.EPS

●ZR22G-□□□-□-E-P
Flange ; Equivalent to DIN PN10-DN50-A

Unit: mm

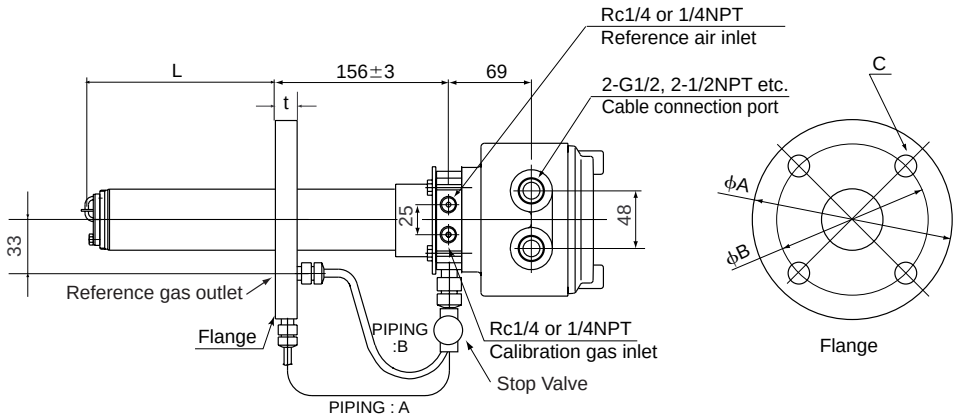

	Model, Code	L	Flange					PIPING	Weight (kg)
			Specification	A	B	C	t		
	ZR22G-040-□-E	400	Equivalent to DIN PN10-DN50 -A	165	125	4-ϕ18	18	A	Approx. 7
	ZR22G-070-□-E	700							Approx. 8
	ZR22G-100-□-E	1000							Approx. 9
	ZR22G-150-□-E	1500							Approx. 10
	ZR22G-200-□-E	2000							Approx. 12
	ZR22G-250-□-E	2500							Approx. 14
	ZR22G-300-□-E	3000							Approx. 16
	ZR22G-360-□-E	3600							Approx. 18
	ZR22G-420-□-E	4200							Approx. 20
	ZR22G-480-□-E	4800							Approx. 22
	ZR22G-540-□-E	5400							Approx. 24

F3.8.4E.EPS

●ZR22G-□□□-□-F-P
Flange ; Equivalent to DIN PN10-DN80-A

Unit: mm

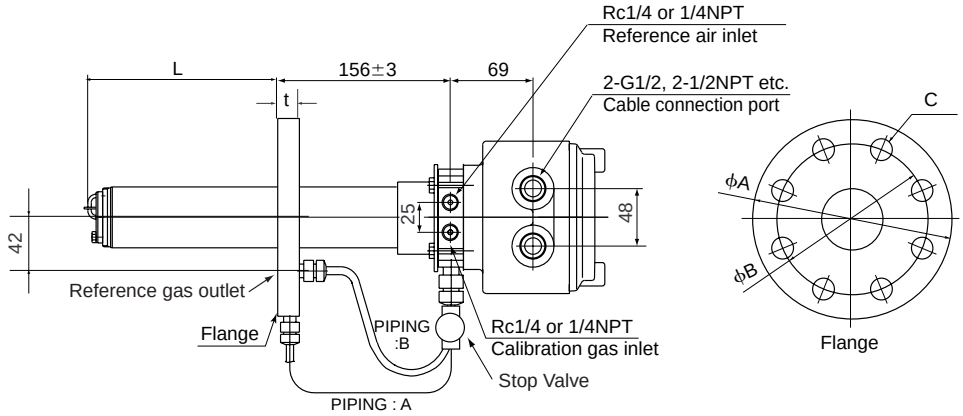

	Model, Code	L	Flange					PIPING	Weight (kg)
			Specification	A	B	C	t		
	ZR22G-040-□-F	400	Equivalent to DIN PN10-DN80 -A	200	160	8-ϕ18	20	B	Approx. 8
	ZR22G-070-□-F	700							Approx. 10
	ZR22G-100-□-F	1000							Approx. 11
	ZR22G-150-□-F	1500							Approx. 12
	ZR22G-200-□-F	2000							Approx. 14
	ZR22G-250-□-F	2500							Approx. 16
	ZR22G-300-□-F	3000							Approx. 18
	ZR22G-360-□-F	3600							Approx. 20
	ZR22G-420-□-F	4200							Approx. 22
	ZR22G-480-□-F	4800							Approx. 24
	ZR22G-540-□-F	5400							Approx. 26

F3.8.5E.EPS

●ZR22G-□□□-□-G-P
Flange ; Equivalent to DIN PN10-DN100-A

Unit: mm

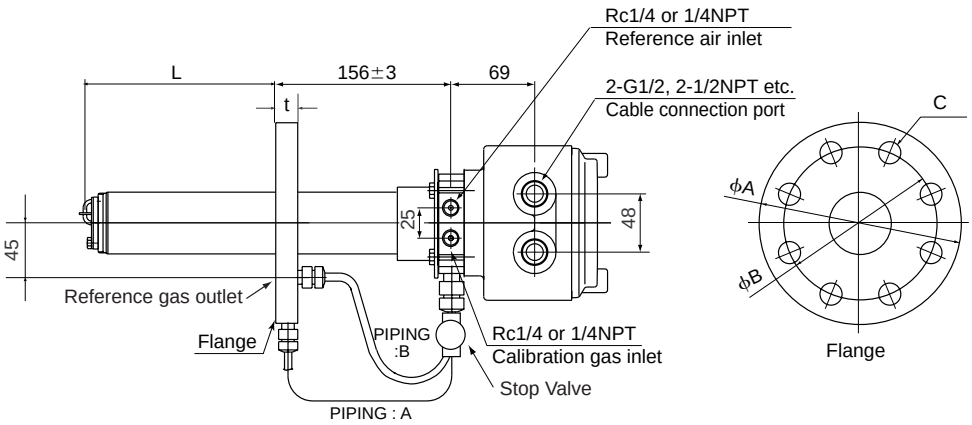

	Model, Code	L	Flange					PIPING	Weight (kg)
			Specification	A	B	C	t		
	ZR22G-040-□-G	400	Equivalent to DIN PN10-DN100 -A	220	180	8-ϕ18	20	B	Approx. 9
	ZR22G-070-□-G	700							Approx. 11
	ZR22G-100-□-G	1000							Approx. 12
	ZR22G-150-□-G	1500							Approx. 13
	ZR22G-200-□-G	2000							Approx. 15
	ZR22G-250□-G	2500							Approx. 17
	ZR22G-300-□-G	3000							Approx. 19
	ZR22G-360-□-G	3600							Approx. 21
	ZR22G-420-□-G	4200							Approx. 23
	ZR22G-480-□-G	4800							Approx. 25
	ZR22G-540-□-G	5400							Approx. 27

F3.8.6E.EPS

●ZR22G-□□□-□-K-P
Flange ; Equivalent to JIS 5K-65-FF

Unit: mm

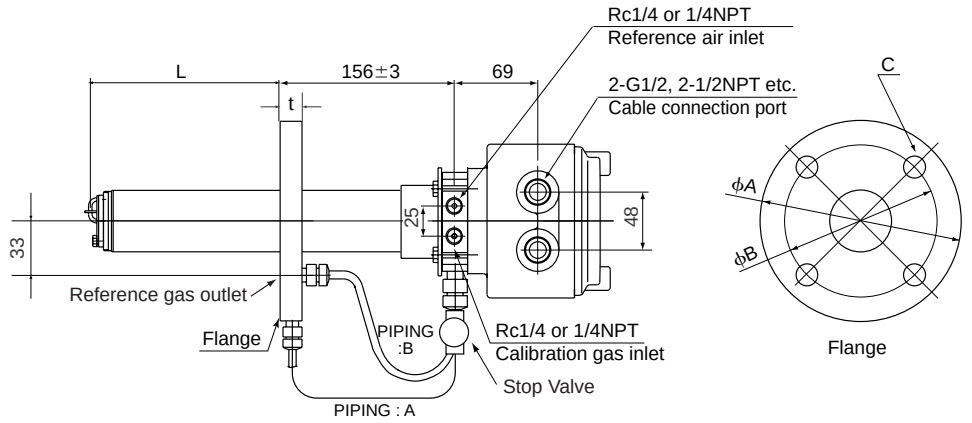

	Model, Code	L	Flange					PIPING	Weight (kg)
			Specification	A	B	C	t		
	ZR22G-040-□-K	400	Equivalent to JIS 5K-65-FF	155	130	4-ϕ15	14	4	Approx. 6
	ZR22G-070-□-K	700							Approx. 7
	ZR22G-100-□-K	1000							Approx. 8
	ZR22G-150-□-K	1500							Approx. 10
	ZR22G-200-□-K	2000							Approx. 12
	ZR22G-250-□-K	2500							Approx. 14
	ZR22G-300-□-K	3000							Approx. 15
	ZR22G-360-□-K	3600							Approx. 17
	ZR22G-420-□-K	4200							Approx. 19
	ZR22G-480-□-K	4800							Approx. 21
	ZR22G-540-□-K	5400							Approx. 23

F3.8.7E.EPS

●ZR22G-□□□-□-L-P
Flange ; Equivalent to JIS 10K-65-FF

Unit: mm

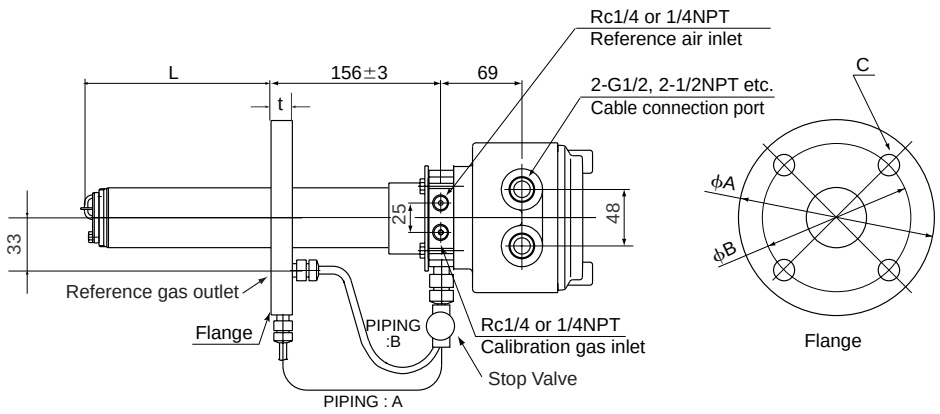

	Model, Code	L	Flange					PIPING	Weight (kg)
			Specification	A	B	C	t		
	ZR22G-040-□-L	400	Equivalent to JIS 10K-65-FF	175	140	4-ϕ19	18	A	Approx. 7
	ZR22G-070-□-L	700							Approx. 8
	ZR22G-100-□-L	1000							Approx. 9
	ZR22G-150-□-L	1500							Approx. 11
	ZR22G-200-□-L	2000							Approx. 13
	ZR22G-250-□-L	2500							Approx. 14
	ZR22G-300-□-L	3000							Approx. 16
	ZR22G-360-□-L	3600							Approx. 18
	ZR22G-420-□-L	4200							Approx. 20
	ZR22G-480-□-L	4800							Approx. 22
	ZR22G-540-□-L	5400							Approx. 24

F3.8.8E.EPS

●ZR22G-□□□-□-M-P
Flange ; Equivalent to JIS 10K-80-FF

Unit: mm

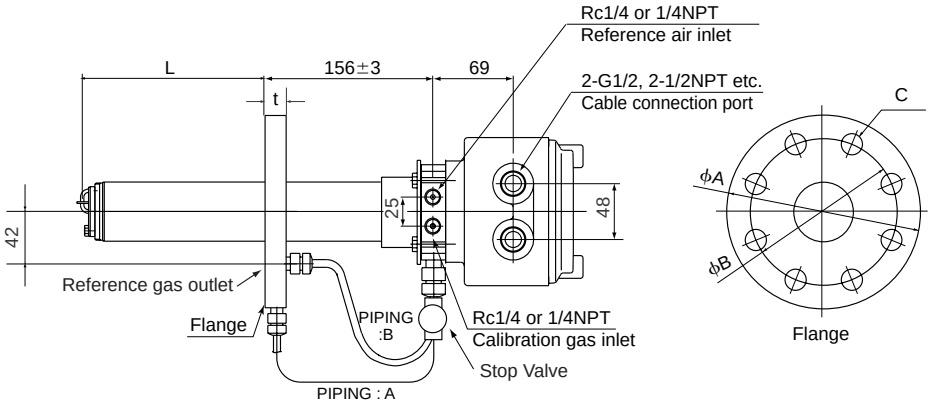

	Model, Code	L	Flange					PIPING	Weight (kg)
			Specification	A	B	C	t		
	ZR22G-040-□-M	400	Equivalent to JIS 10K-80-FF	185	150	8-ϕ19	18	B	Approx. 7
	ZR22G-070-□-M	700							Approx. 8
	ZR22G-100-□-M	1000							Approx. 9
	ZR22G-150-□-M	1500							Approx. 11
	ZR22G-200-□-M	2000							Approx. 13
	ZR22G-250-□-M	2500							Approx. 15
	ZR22G-300-□-M	3000							Approx. 16
	ZR22G-360-□-M	3600							Approx. 18
	ZR22G-420-□-M	4200							Approx. 20
	ZR22G-480-□-M	4800							Approx. 22
	ZR22G-540-□-M	5400							Approx. 24

F3.8.9E.EPS

●ZR22G-□□□-□-P-P
Flange ; Equivalent to JIS 10K-100-FF

Unit: mm

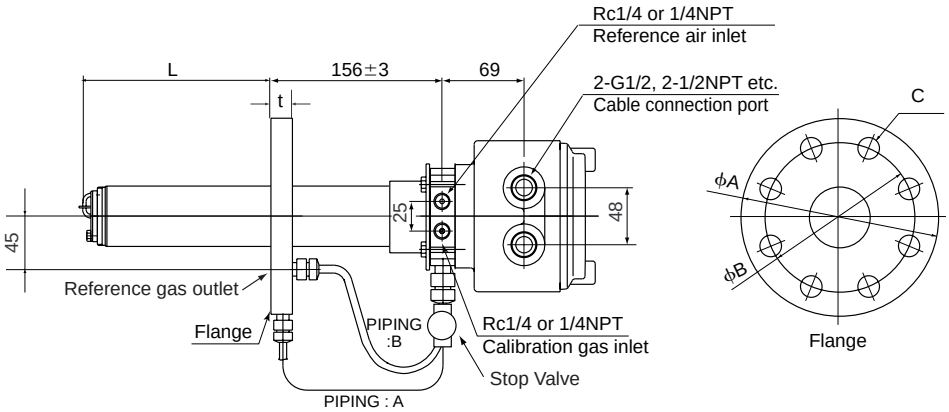

	Model, Code	L	Flange					PIPING	Weight (kg)
			Specification	A	B	C	t		
	ZR22G-040-□-P	400	Equivalent to JIS 10K-100-FF	210	175	8-ϕ19	18	B	Approx. 8
	ZR22G-070-□-P	700							Approx. 10
	ZR22G-100-□-P	1000							Approx. 11
	ZR22G-150-□-P	1500							Approx. 12
	ZR22G-200-□-P	2000							Approx. 14
	ZR22G-250-□-P	2500							Approx. 16
	ZR22G-300-□-P	3000							Approx. 18
	ZR22G-360-□-P	3600							Approx. 20
	ZR22G-420-□-P	4200							Approx. 22
	ZR22G-480-□-P	4800							Approx. 24
	ZR22G-540-□-P	5400							Approx. 26

F3.8.10.EPS

●ZR22G-□□□-□-R-P
Flange ; Equivalent to JPI CLASS150-4-RF

Unit: mm

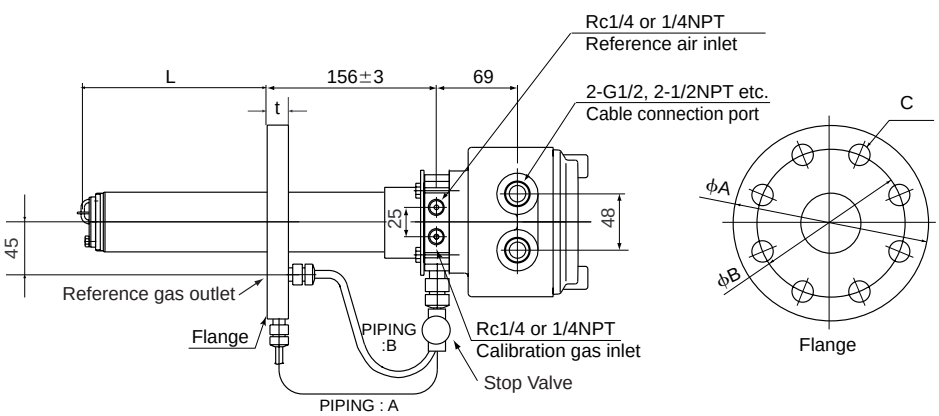

	Model, Code	L	Flange					PIPING	Weight (kg)
			Specification	A	B	C	t		
	ZR22G-040-□-R	400	Equivalent to JPI CLASS150 -4-RF	229	190.5	8-ϕ19	24	B	Approx. 11
	ZR22G-070-□-R	700							Approx. 12
	ZR22G-100-□-R	1000							Approx. 13
	ZR22G-150-□-R	1500							Approx. 15
	ZR22G-200-□-R	2000							Approx. 17
	ZR22G-250-□-R	2500							Approx. 19
	ZR22G-300-□-R	3000							Approx. 20
	ZR22G-360-□-R	3600							Approx. 22
	ZR22G-420-□-R	4200							Approx. 24
	ZR22G-480-□-R	4800							Approx. 26
	ZR22G-540-□-R	5400							Approx. 28

F3.8.11.EPS

●ZR22G-□□□-□-S-P
Flange ; Equivalent to JPI CLASS150-3-RF

Unit: mm

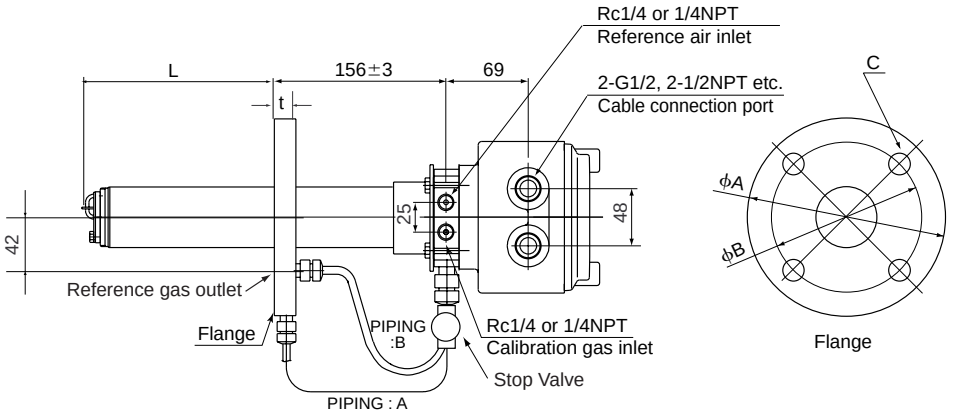

	Model, Code	L	Flange					PIPING	Weight (kg)
			Specification	A	B	C	t		
	ZR22G-040-□-S	400	Equivalent to JPI CLASS150 -3-RF	190	152.4	4-ϕ19	24	B	Approx. 9
	ZR22G-070-□-S	700							Approx. 10
	ZR22G-100-□-S	1000							Approx. 11
	ZR22G-150-□-S	1500							Approx. 13
	ZR22G-200-□-S	2000							Approx. 14
	ZR22G-250-□-S	2500							Approx. 16
	ZR22G-300-□-S	3000							Approx. 18
	ZR22G-360-□-S	3600							Approx. 20
	ZR22G-420-□-S	4200							Approx. 22
	ZR22G-480-□-S	4800							Approx. 24
	ZR22G-540-□-S	5400							Approx. 26

F3.8.12E.EPS

●ZR22G-□□□-□-W-P
Flange ; Westinghouse

Unit: mm

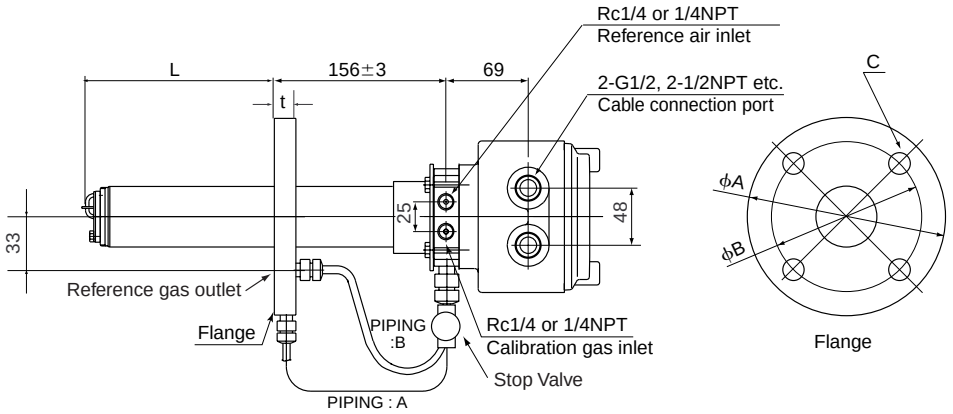

	Model, Code	L	Flange					PIPING	Weight (kg)
			Specification	A	B	C	t		
	ZR22G-040-□-W	400	Westinghouse	155	127	4-ϕ11.5	14	A	Approx. 6
	ZR22G-070-□-W	700							Approx. 7
	ZR22G-100-□-W	1000							Approx. 8
	ZR22G-150-□-W	1500							Approx. 10
	ZR22G-200-□-W	2000							Approx. 12
	ZR22G-250-□-W	2500							Approx. 14
	ZR22G-300-□-W	3000							Approx. 15
	ZR22G-360-□-W	3600							Approx. 17
	ZR22G-420-□-W	4200							Approx. 19
	ZR22G-480-□-W	4800							Approx. 21
	ZR22G-540-□-W	5400							Approx. 23

F3.8.13E.EPS

4. Piping

This chapter describes piping procedures based on three typical system configurations for EXAxt ZR Separate-type Zirconia Oxygen Analyzer.

- Ensure that each check valve, stop valve and joint used for piping does not allow leakage. Especially, if there is any leakage of the calibration gas from piping and joints , it may cause clogging of the piping or incorrect calibration.
- Be sure to conduct leakage test after installing the piping.
- Basically, apply instrument air (dehumidified by cooling to the dew point -20° C or lower, and removing any dust, oil mist and the like) for the reference gas when piping. Stable analyzing can be conducted when using instrument air.
- When the instrument uses natural convection for reference gas, ambient air near the detector is used for reference gas; therefore the accuracy of analysis will be affected by ambient humidity changes or the like. If more accurate analysis is necessary, use instrument air (dehumidified to the dew point -20° C or lower, and removing any dust, oil mist and the like) for reference gas.

4.1 Piping for System 1

The piping in System 1 is illustrated in Figure 4.1.

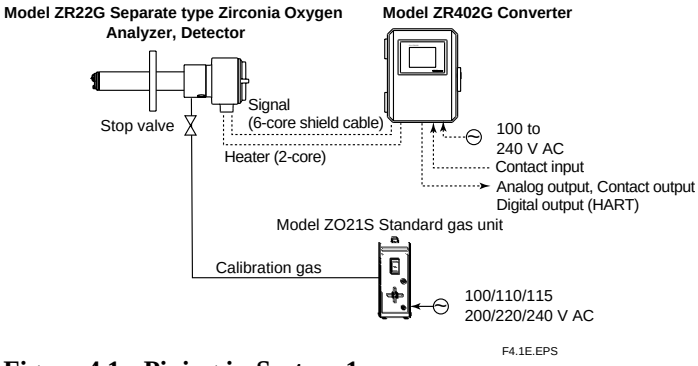

Figure 4.1 Piping in System 1

Piping in System 1 is as follows:

- Place a stop valve through the nipple at the calibration gas inlet of the detector. Then mount a joint for a 6 mm (O.D.) ×4 mm (I.D.) soft tube at the stop valve connection hole of the inlet side (see Section 4.1.2). The tube is to be connected to this joint only during calibration.

CAUTION

- The stop valve should be connected directly to the detector. If any piping is present between the detector and the stop valve, water may condense in the pipe, which may cause damage to the sensor by rapid cooling when the calibration gas is introduced. The stop valve should be closed except while the calibration gas is being introduced.
- If a high-temperature detector is used (the sample gas temperature is 700° C or higher), piping for the reference gas is required. In other cases, piping is required if the air around the detector is not clean.
- The reference gas should have an oxygen concentration identical to that of fresh air (21%).
- When a high-temperature detector is used, the sample gas is vented into the surrounding air.

●Therefore, the oxygen concentration required may not be obtained unless an exhaust pipe is installed.

● If a high-temperature detector is used and no piping can be installed for the reference gas, place piping in the exhaust hole for the sample gas on the high-temperature probe adapter so that the sample gas is carried away from the vicinity of the detector (see Section 4.1.4, Figure 4.6).

● If a high-temperature detector is used and the measured gas is under negative pressure, connect an auxiliary ejector to the sample gas exhaust hole of the high-temperature probe adapter (see Section 4.1.4, Figure 4.3).

● If a high-temperature detector is used and the pressure of the measured gas is 0.49 kPa or higher, it is recommended that a needle valve (throttle) be used in the sample gas exhaust of the high-temperature probe adapter (see Section 4.1.4, Figure 4.4).

CAUTION

• This is for lowering the sample gas temperature below 700° C. If the gas temperature is high and the pressure is also significantly high, the sampled gas temperature may not fall to below 700° C before it reaches the detector.
On the other hand, if the sample gas temperature is lowered too much, condensation may be produced in the high-temperature probe adapter. During wintertime, it is recommended that the probe adapter be protected with an insulating material to avoid condensation forming (see Figure 4.5).
For the usage of the high-temperature probe adapter, refer to Section 3.2.2.

4.1.1 Parts Required for Piping in System 1

Check that the parts listed in Table 4.1 are ready.

Table 4.1

Detector	Piping location	Parts	Note	
General-use detector	Calibration gas inlet	Stop valve	of a quality specified by YOKOGAWA (L9852CB or G7016XH)	
		nipple *	Rc1/4 or 1/4 NPT	general parts
		joint for tube connection	Rc1/4 (1/4NPT) for a ϕ6 ×ϕ4mm soft tube	general parts
	Reference gas inlet	(sealed up)	(when piping is required, refer to section 4.1.3)	
High-temperature detector	Calibration gas inlet	Stop valve	of a quality specified by YOKOGAWA (L9852CB or G7016XH)	
		nipple *	Rc1/4 or 1/4 NPT	general parts
		joint for tube connection	Rc1/4 (1/4 NPT) for a ϕ6 ×ϕ4mm soft tube	
	Reference gas inlet	(sealed up)	(when piping is required, refer to section 4.1.3)	
	Sample gas outlet	Auxiliary ejector *	of a quality specified by YOKOGAWA (E7046EC or E7046EN)	
		T-shaped joint of the same diameter *	R1/4 or 1/4 NPT	general parts
		Needle valve *	Rc1/4 or 1/4 NPT	general parts
		nipple of other diameter *	R1/2 to R1/4 or R1/2 to 1/4 NPT	general parts

Note: Parts with marking * are used when required.
General parts can be found on the open market.

T4.1E.EPS

4.1.2 Connection to the Calibration Gas Inlet

When carrying out calibration, connect the piping (6(O.D) ~4(I.D.) mm tube) from the standard gas unit to the calibration gas inlet of the detector. First, mount a stop valve (of a quality specified by YOKOGAWA) on a nipple (found on the open market) as illustrated in Figure 4.2, and mount a joint (also found on the open market) at the stop valve tip. (The stop valve may be mounted on the detector prior to shipping the detector.)

Note 1: Mount the stop valve close to the detector.

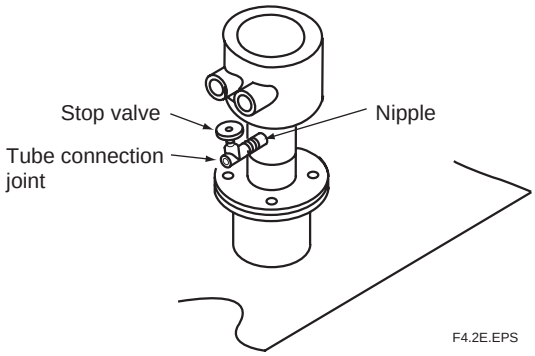

Figure 4.2 Connection to the calibration gas inlet

4.1.3 Connection to the Reference Gas Inlet

- Normally, no piping is required for the reference gas inlet when the equipment uses natural convection for reference gas (models ZR22G-□-□-□-C). Leave the plug as it is . If the air around the detector is polluted and the necessary oxygen concentration (21 vol% O_2) cannot be obtained, prepare piping the same as which described in Section 4.2, System 2.
- When the equipment uses instrument air for the reference gas, piping is required as described in Section 4.2, System 2 (models ZR22G-□-□-□-E or P).

4.1.4 Piping to the High-temperature Probe Adapter

- The measured gas should be at a temperature below 700° C before reaching the detector sensor.
  If the gas is under negative pressure, it should be fed to the detector by suction.
- For usage of the probe adapter when using high-temperature detector, refer to Section 3.2.2.
- If the measured gas is under negative pressure, connect the auxiliary ejector (E7046EC/E7046EN) as illustrated in Figure 4.3. Mount the pressure gauge as close as possible to the auxiliary ejector. However, if the ambient temperature is too high, mount the gauge in a location with a temperature below 40° C.

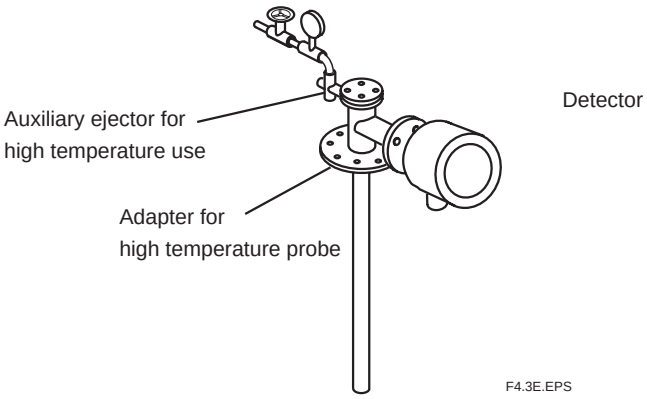

Figure 4.3 Mounting the auxiliary ejector

If the temperature of the measured gas exceeds the specified value and its pressure exceeds 0.49k Pa, the sample gas temperature may not be below 700° C at the detector. In such a case, connect a needle valve (found on the open market) through a nipple (also found on the open market) to the probe adapter sample gas exhaust (Rc 1/2) so that the sample gas exhaust volume is restricted.

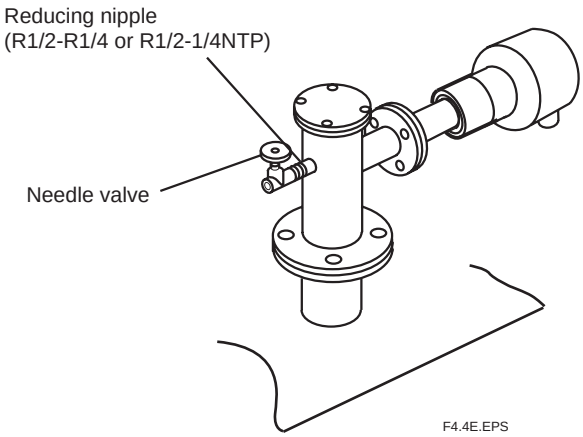

Figure 4.4 Mounting the needle valve for restricting exhaust flow of the sample gas

In cases where condensation is likely to occur in the probe adapter when the sample gas is cooled, protect the probe adapter with an insulating material as illustrated in Figure 4.5.

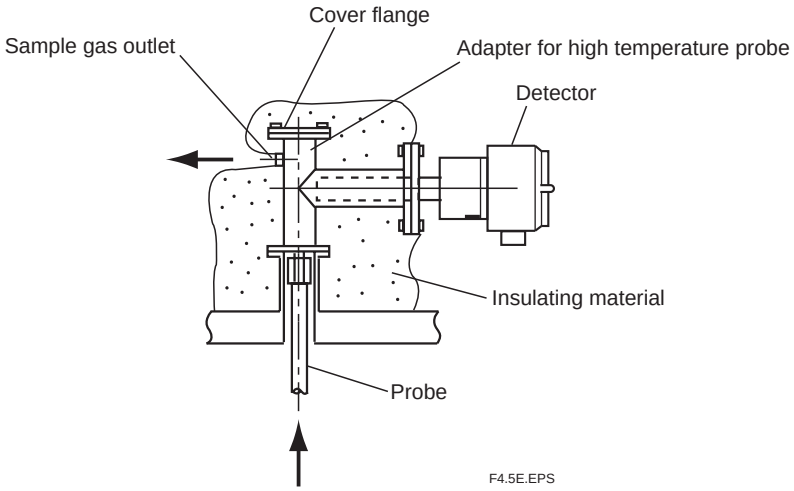

Figure 4.5 Preventing to condensation

If the sample gas is to be vented at a distance from the detector because no reference gas piping can be provided, an exhaust pipe should be installed as illustrated in Figure 4.6. In addition, the exhaust pipe shall be kept warm to protect against condensation.

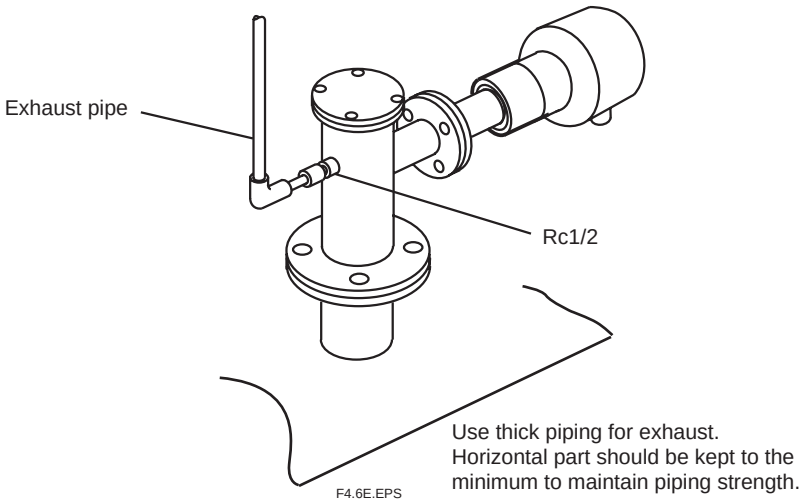

Figure 4.6 Exhaust pipe

4.2 Piping for System 2

Piping in System 2 is illustrated in Figure 4.7.

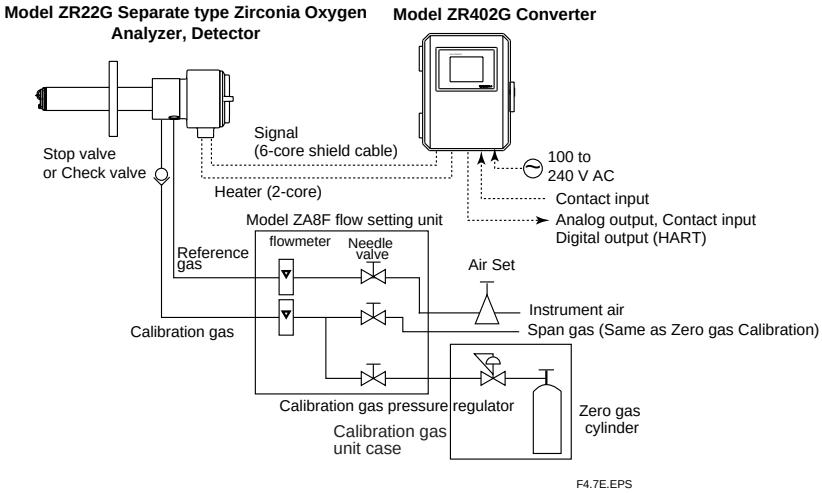

Figure 4.7 Piping for System 2

System 2 illustrated in Figure 4.7 requires piping as follows:

- Connect a stop valve or check valve to the nipple at the reference gas inlet of the detector.
- If a high-temperature detector is used and the sample gas is under negative pressure, connect an auxiliary ejector to the sample gas exhaust hole of the high-temperature probe adapter (see Section 4.1.4, Figure 4.3).
- If a high-temperature detector is used and the pressure of the measured gas is 0.5 kPa or higher, it is recommended that a needle valve (throttle) be used in the sample gas exhaust of the high-temperature probe adapter (see Section 4.1.4, Figure 4.4).

CAUTION

- This is for lowering the sample gas temperature below 700° C. If the gas temperature is high and the pressure is also significantly high, the sampled gas temperature may not reduced below 700° C when reaching the detector.
  On the other hand, if the sample gas temperature is lowered too much, condensation may be produced in the high-temperature probe adapter. During wintertime, it is recommended that the probe adapter be protected with an insulating material to prevent condensation (see Figure 4.5).
  For the usage of the high-temperature probe adapter, refer to Section 3.2.2.

● If the dust sticking to the interior of the high-temperature probe adapter is to be eliminated by blow-back while using the high-temperature detector, the air feed for blow-back should also be taken into consideration.

CAUTION

- The probe is easily clogged if too much dust is contained in the sample gas such as in a utility boiler or concrete kiln. To get rid of the dust with compressed air, the piping from the air source is connected only during cleaning. Blow back piping can be installed for dust cleaning as illustrated in Section 4.3.1.

4.2.1 Piping Parts for System 2

Check that the parts listed in Table 4.2 are ready.

Table 4.2

Detector	Piping location	Parts	Note	
General-use detector	Calibration gas inlet	Stop valve or check valve	Recomended by YOKOGAWA (L9852CB or G7016XH) Provided by YOKOGAWA (K9292DN or K9292DS)	
		Nipple *	Rc1/4 or 1/4 NPT	general parts
		Zero gas cylinder	User«s scope	
		Gas pressure regulator	Recommended by YOKOGAWA (G7013XF or G7014XF)	
		Joint for tube connection	Rc1/4 or 1/4 NPT	general parts
	Reference gas inlet	Air set	Recommended by YOKOGAWA (G7011XF or E7040EL)	
		Joint for tube connection	Rc1/4 or 1/4 NPT	general parts
High-temperature Detector	Calibration gas inlet	Stop valve or check valve	Recommended by YOKOGAWA (L9852CB or G7016XH) Provided by YOKOGAWA (K9292DN or K9292DS)	
		Nipple *	Rc1/4 or 1/4 NPT	general parts
		Zero gas cylinder	User«s scope	
		Gas pressure regulator	Recommended by YOKOGAWA (G7013XF or G7014XF)	
		Joint for tube connection	Rc1/8 or 1/8 NPT	
	Reference gas inlet	Air set	Recommended by YOKOGAWA (G7011XF or E7040EL)	
		Joint for tube connection	Rc1/4 or 1/4 NPT	general parts
	Sample gas outlet	Auxiliary ejector *	Recommended by YOKOGAWA (E7046EC or E7046EN)	
		T-shaped joint of the same diameter *	R1/4 or 1/4 NPT	general parts
		Needle valve *	Rc1/4 or 1/4 NPT	general parts
		Reducing nipple *	R1/2 to R1/4 or R1/2 to 1/4 NPT	general parts

T4.2E.EPS

Note: Parts with marking * are used when required.
General parts can be found on the open market.

4.2.2 Piping for the Calibration Gas

This piping is to be installed between the zero gas cylinder and the ZA8F flow setting unit, and between the ZA8F flow setting unit and the ZR22G detector.

The cylinder should be placed in a calibration gas unit case or the like to avoid any direct sunlight or radiant heat so that the gas cylinder temperature does not exceed 40° C. Mount a regulator valve (specified by YOKOGAWA) on the cylinder.

Mount a check valve or stop valve (specified by YOKOGAWA) on the nipple (found on the open market) at the calibration gas inlet of the detector as illustrated in Figure 4.8. (The check valve or the stop valve may have been mounted on the detector when shipped.) Connect the flow setting unit and the detector to a stainless steel pipe 6 mm (O.D.) ~ 4 mm or larger (I.D.) (or nominal size 1/4 inch).

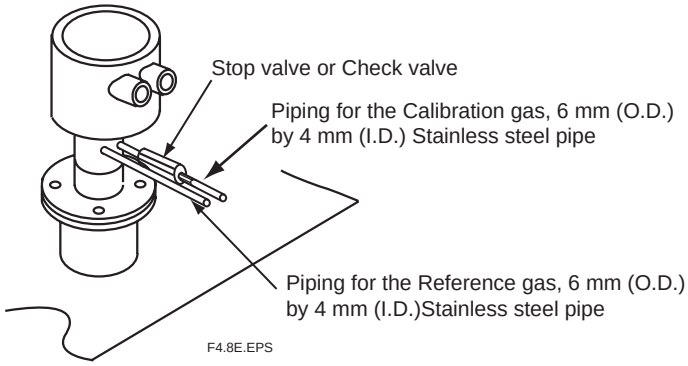

Figure 4.8 Piping for the Calibration Gas Inlet

4.2.3 Piping for the Reference Gas

Reference gas piping is required between the air source (instrument air) and the flow setting unit, and between the flow setting unit and the detector.

Insert the air set next to the flow setting unit in the piping between the air source and the flow setting unit.

Use a 6 mm (O.D.) ~ 4 mm or larger (I.D.) (or nominal size 1/4 inch) stainless steel pipe between the flow setting unit and the detector.

4.2.4 Piping to the High-temperature Probe Adapter

Refer to Section 4.1.4.

4.3 Piping for System 3

Piping in System 3 is illustrated in Figure 4.10. In System 3, calibration is automated; however, the piping is basically the same as that of System 2. Refer to Section 4.2.

Adjust secondary pressure of both the air set and the zero gas reducing valve so that these two pressures are approximately the same. The flow rate of zero and span gases (normally instrument air) are set by a single needle valve.

After installation and wiring, check the calibration contact output (see Sec. 7.11.2), and adjust zero gas reducing valve and calibration gas needle valve so that zero gas flow is within the permitted range. Next check span gas calibration contact output and adjust air set so that span gas flow is within the permitted range.

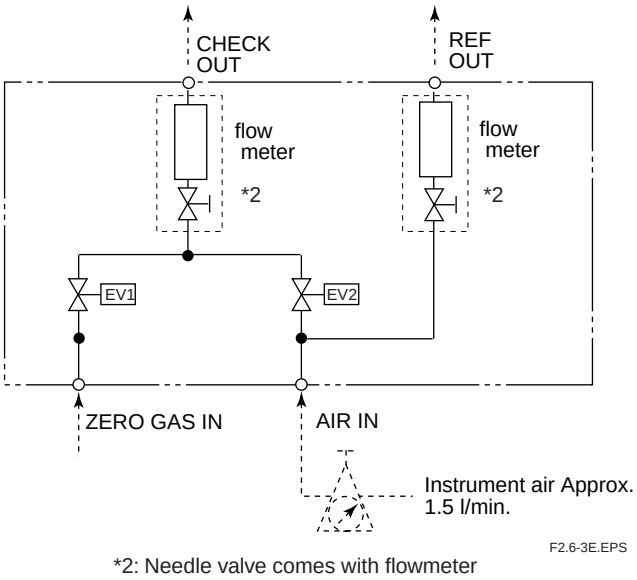

Figure 4.9 ZR40H Autcalinration unit piping diagram

If the contact input to the converter is used for the blow back function, prepare blow back piping according to Section 4.3.1.

Note

Blow back function means the function to get rid of dust inside a probe in a high-temperature probe adapter by using compressed air, when a high-temperature detector is used.

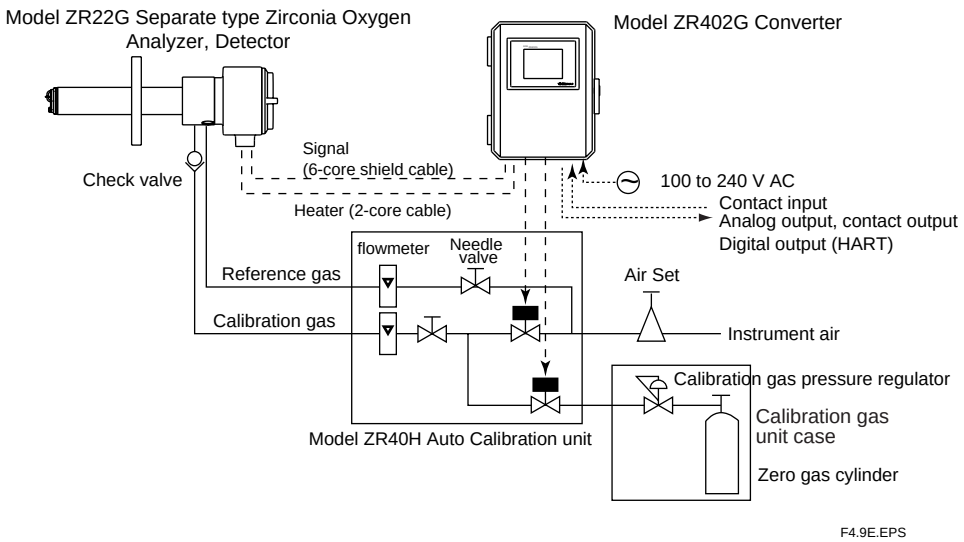

Figure 4.10 Piping for System 3

4.3.1 Blow Back Piping

This piping is required when the blow back function is carried out. The piping described below provides automatic blow back operation when the " blow back start " command is entered to the converter.

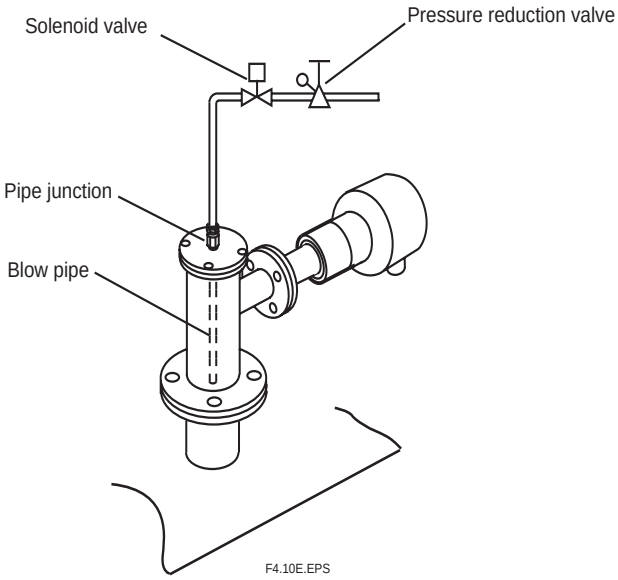

Figure 4.11 Blowback Piping

The following parts are required for blow back piping.

- Blow pipe (to be prepared as illustrated in Figure 4.11.)
- Two-way solenoid valve: “ Open “ when electric current is on. (Found on the open market)
- Air set (recommended by YOKOGAWA, G7011XF or E7040EL)

<Blow pipe manufacturing>

Manufacture the blow pipe as illustrated in Figure 4.12, and mount it on the high-temperature probe adapter.

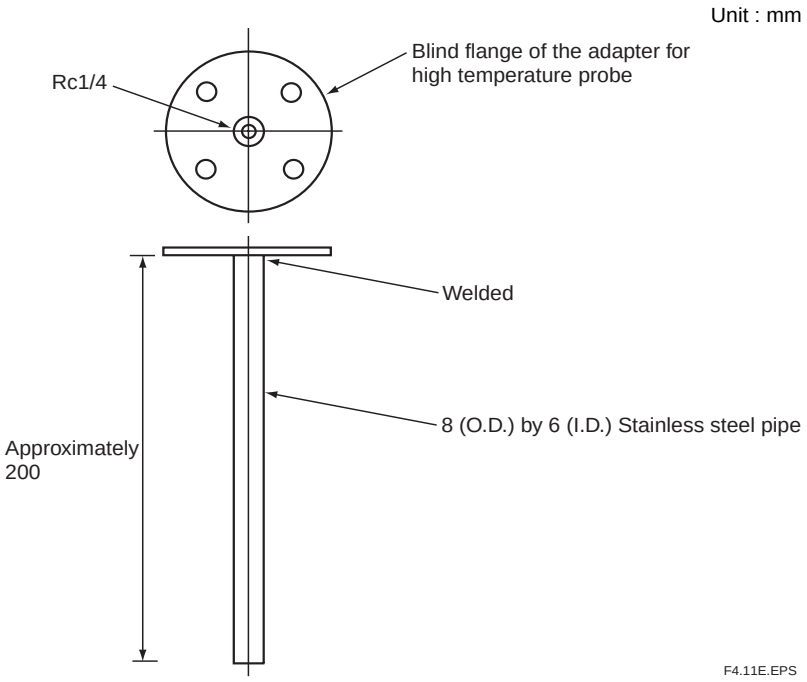

Figure 4.12 Manufacturing Blow pipe

4.4 Piping for the Detector with Pressure Compensation

ZR22G-□-□-□-P Detector with Pressure Compensation may be used in System 2 and System 3. However, it cannot use piping for high-temperature probe adapter or blow back piping. Use this style detector whenever the furnace pressure exceeds 5 kPa (see Note). Even if the furnace is high, the detector can measure by adjusting pressure of the detector to the furnace pressure using instrument air. The inside pressure of the probe will be kept the same as the furnace pressure by feeding instrument air at higher pressure than that in the furnace.

The detector with pressure compensation is illustrated in Figure 4.13.

Note

Process gas pressure should not vary rapidly and widely.

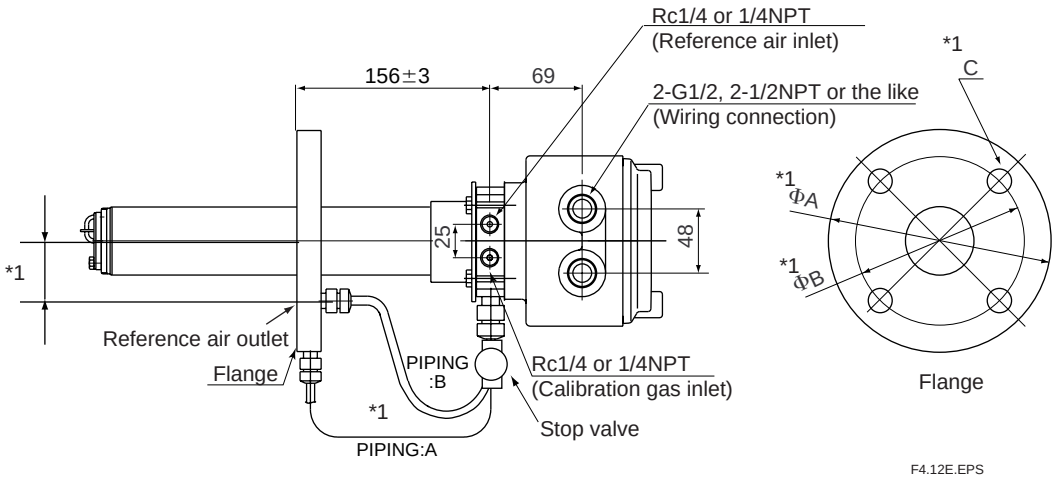

*1 Dimensions may vary depending on the detector type. Refer to Section 3.8
Ensure that the flange gasket does not block the reference air outlet.
Where necessary, make a notch on the flange

Figure 4.13 Detector with Pressure Compensation

Ensure that process gas does not flow into the probe.

Valve operation

1. For safety, stop the furnace that the detector is to be installed in. If furnace internal pressure is high, this is especially dangerous.
2. Before starting instrument air flow, completely shut the stop valve in front of the reference gas outlet.
3. Check that the reference gas outlet is not blocked by a flange gasket or the like.
4. Set the instrument air pressure higher than furnace internal pressure.
5. Completely open the stop valve in front of the reference gas outlet and, after turning on instrument air flow, start furnace operation. As furnace internal pressure rises, confirm that instrument air continues to flow and adjust the valve or increase supply pressure if necessary.
6. After furnace internal pressure stabilizes, adjust flow.
7. If furnace operation is stopped, stop instrument air flow and completely shut the stop valve in front of the reference gas outlet. You may leave reference gas flowing if you wish.

CAUTION

- Use suitable cable glands to completely seal the detector. As far as possible do not stop the instrument air flow, to prevent the measured gas from entering the detector and damaging the zirconia cell.
- Connect the stop valve, which is at the calibration gas inlet, directly to the detector. If there is piping between the detector and the valve, condensation may damage the sensor by rapid cooling when calibration gas is introduced.

Figure 4.14 illustrates an example of System 2 using a detector with pressure compensation.

Supply air pressure (flow) may vary depending on the furnace pressure. It is recommended to use a flow gauge and an air set that is suitable for the furnace pressure.

CAUTION

- When using the ZA8F Flow Setting Unit and ZR40H Automatic Calibration Unit, please note that the supplying airflow (pressure) will vary depending on the furnace pressure.

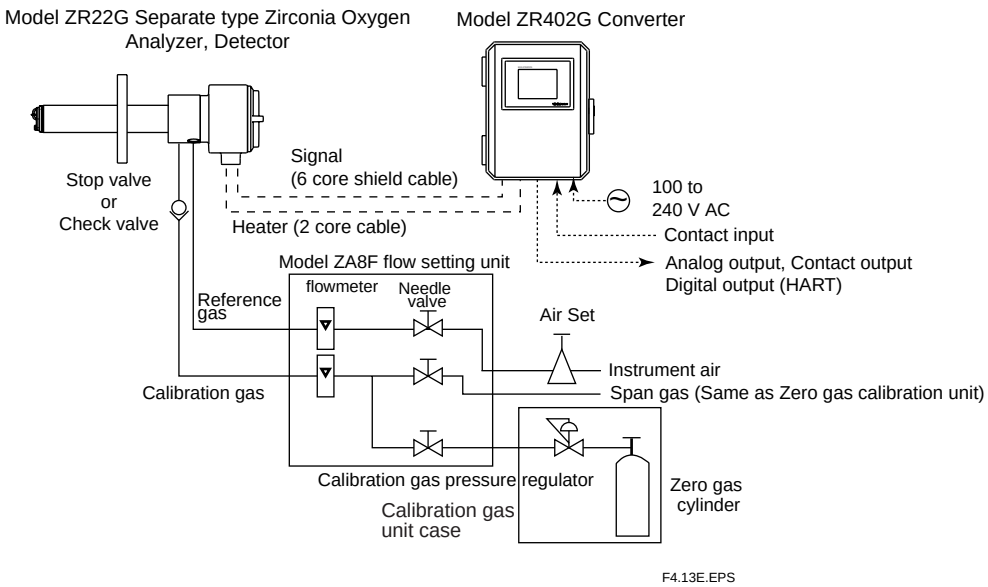

Figure 4.14

4.4.1 Piping Parts for a System using Detector with Pressure Compensation

Check that the parts listed in Table 4.3 are ready.

Table 4.3

Detector	Piping location	Parts	Note	
Detector with pressure compensation	Calibration gas inlet	Stop valve or check valve	Recommended by YOKOGAWA (L9852CB or G7016XH)Provided by YOKOGAWA (K9292DN or K9292DS)	
		Nipple *	Rc1/4 or 1/4 NPT	general parts
		Zero gas cylinder	User«s scope	
		Gas pressure regulator	of a quality specified by YOKOGAWA (G7013XF or G7014XF)	
		Joint for tube connection	Rc1/4 or 1/4 NPT	general parts
	Reference gas inlet	Air set	of a quality specified by YOKOGAWA (G7011XF or E7040EL)	
		Joint for tube connection	Rc1/4 or 1/4 NPT	general parts

Note: Parts with marking * are used when required.
General parts can be found on the open market.

T4.3E.EPS

4.4.2 Piping for the Calibration Gas

Calibration gas piping is basically identical to that of System 2. See Section 4.2.2.

4.4.3 Piping for the Reference Gas

Reference gas piping is basically identical to that of for System 2. See Section 4.2.3.

5. Wiring

In this Chapter, the wiring necessary for connection to the EXAxtZR Separate-type Zirconia Oxygen Analyzer is described.

5.1 General

CAUTION

- NEVER supply current to the converter or any other device constituting a power circuit in combination with the converter, until all wiring is completed.
- This product complies with CE marking.
  Where compliance with CE marking is necessary, the following wiring procedure is necessary.

1. Install an external switch or circuit breaker to the power supply of the converter.
2. Use an external switch or circuit breaker rated 5A and conforming with IEC 947-1 or IEC 947-3.
3. It is recommended that the external switch or circuit breaker be mounted in the same room as the converter.
4. The external switch or circuit breaker should be installed within the reach of the operator, and marked as the power supply switch of this equipment.

Wiring procedure

Wiring should be performed according to the following procedure:

1. Be sure to connect the shield line to FG terminal of the converter.
2. The outer sheath of the signal line should be stripped to a length of 50 mm or less. The most outer sheath of the power cable should be stripped to a length of 20 mm or less.
3. Signals may be affected by noise if signal lines, power cable and heater cable are located in the same conduit. When using conduit, signal lines should be installed in a separate conduit than power and heater cables.
4. Install metal blind plug(s) in unused cable connection gland(s) of the converter.
5. Metal conduit should be grounded.
6. The following cables are used for wiring:

Table 5.1 Cable specifications

Terminal name of converter	Name	Need for shields	Cable type	Number or wires
CELL+, CELL- HTR TC+, HTR TC- CJ+, CJ-	Converter signal	○	CVVS	6
HEATER	Converter heater		CVV	2
L, N,	Power supply		CVV	2 or 3 *
AO-1+, AO-1-, AO-2+, AO-2-	Analog output	○	CVVS	2 or 4
DO-1, DO-2, DO-3, DO-4	Contact output		CVV	2 to 8
AC-Z, AC-S, AC-C	Automatic Calibration unit		CVV	3
DI-1, DI-2, DI-C	Contact input		CVV	3

Note *: When the case is used for protective grounding, use a 2-wire cable.

T5.1E.EPS

CAUTION

- Select suitable cable O.D. to match the cable gland size.
- Protective grounding should be connected in ways equivalent to JIS D style (Class 3) grounding (the grounding resistance is 100 Ω or less).
- Special consideration of cable length should be taken for the HART communication, For the detail, refer to Section 1.1.2 of the IM 11M12A01-51E " Communication Line Requirement ".

5.1.1 Terminals for the External Wiring in the Converter

Open the front door and remove the terminal cover to gain access to the converter external wiring terminals (see Figure 5.2).

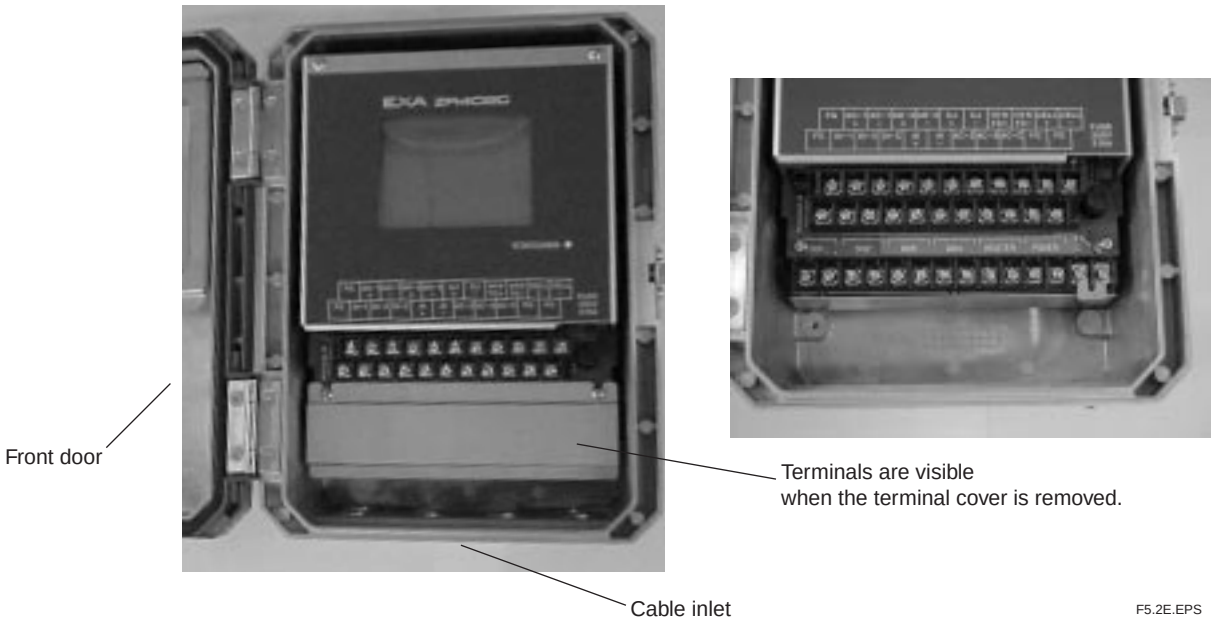

Figure 5.2 Terminals for external wiring in the converter

5.1.2 Wiring

Connect the following wiring to the converter. It requires a maximum of eight wiring connections as shown below.

(1) Detector output (connects the converter with the detector.)
(2) Detector heater power (connects the converter with the detector.)
(3) Analog output signal
(4) Power and ground
(5) Contact output
(6) Operation of the solenoid valve of automatic calibration unit
(7) Contact input

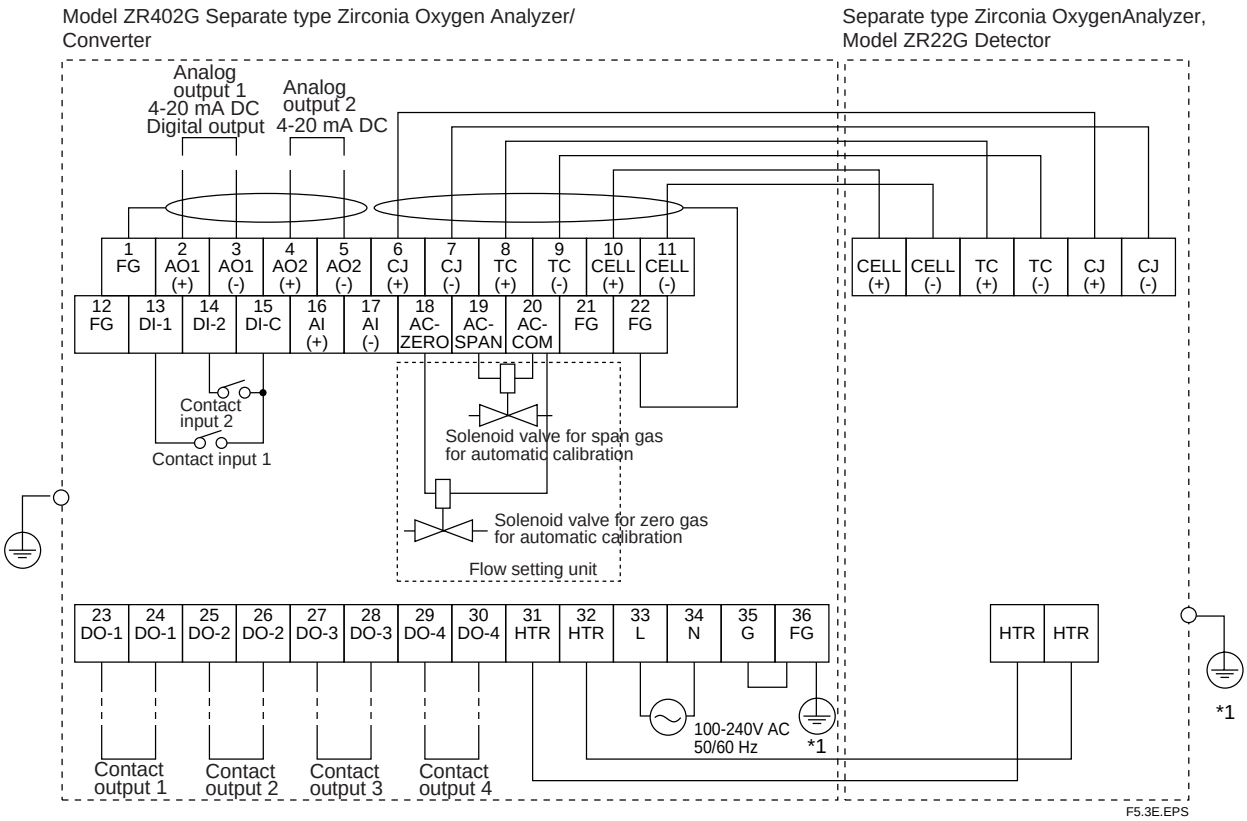

*1 The protective grounding for the converter should be connected to either the protective ground terminal in the equipment or the ground terminal on the case.
Standard regarding grounding: JIS D type (Class 3 ground), ground resistance: 100 Ω or less.

Figure 5.3 Wiring connection to the converter

5.1.3 Mounting of Cable Gland

For each cable connection opening of the converter, mount a conduit that matches the thread size, or a cable gland.

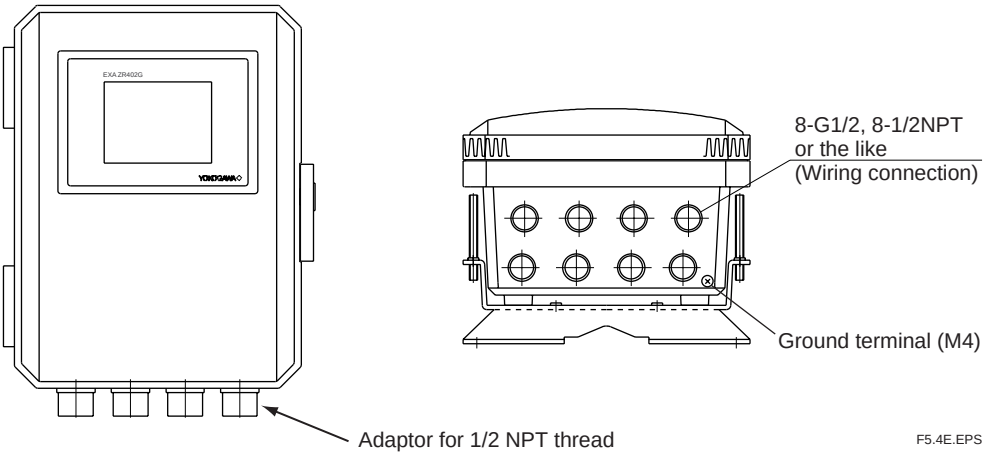

Figure 5.4 Cable gland mounting

5.2 Wiring for Detector Output

This wiring enables the converter to receive cell output from the detector, output from a thermocouple and a reference junction compensation signal. Install wires that allow for 10Ω of loop resistance or less. Keep detector wiring away from power wiring.

Separate signal and power wiring.

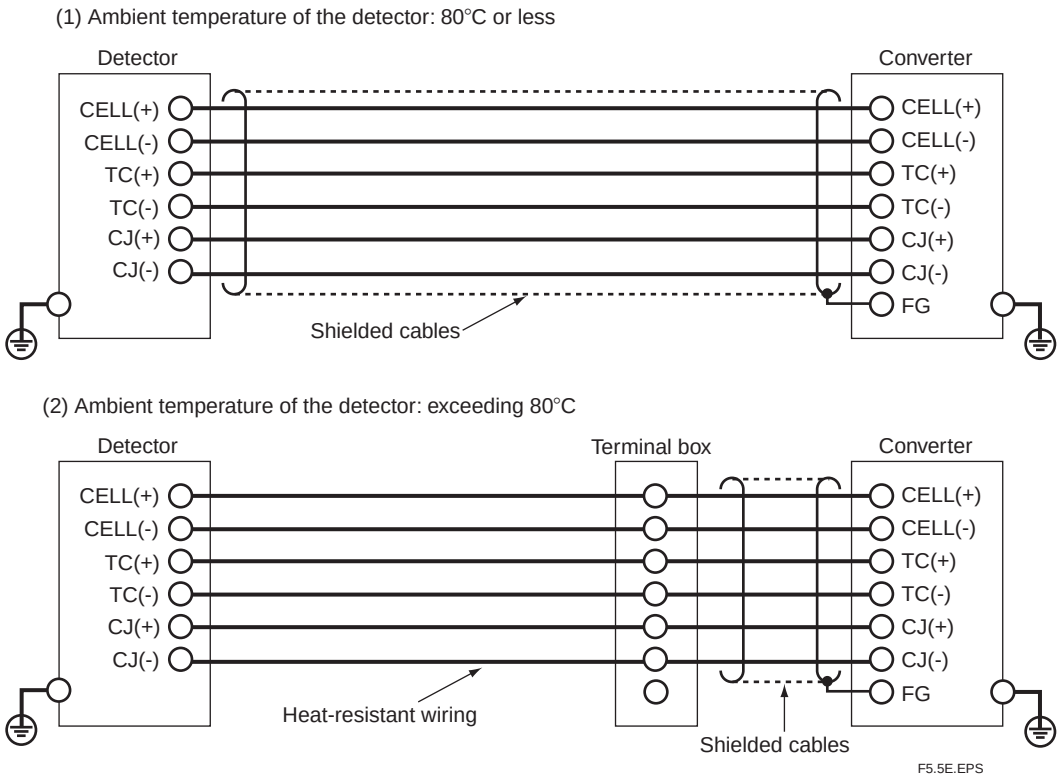

Figure 5.5 Wiring for detector output

Note

If shielded cables cannot be used between the detector and the terminal box, for example, when heat-resistant wiring is used, locate the detector and the terminal box as close together as possible.

5.2.1 Cable Specifications

Basically, PVC sheathed PVC insulated cable (six core) is used for this wiring. When the ambient temperature of the detector exceeds 80° C, install a terminal box, and connect with the detector using six-piece 600-V silicon rubber insulated glass braided wire.

5.2.2 Connection to the Detector

To connect cables to the detector, proceed as follows:

(1) Mount conduits of the specified thread size or cable glands to the wiring connections of the detector.
The detector may need to be removed in future for maintenance, so be sure to allow sufficient cable length.

(2) If the ambient temperature at the location of wire installation is 80 to 150° C, be sure to use a flexible metallic wire conduit. If a non-shielded " 600V silicon rubber insulated glass braided wire " is used, keep the wire away from noise sources to avoid noise interference.

(3) Figure 5.6 shows the layout of the detector terminals.

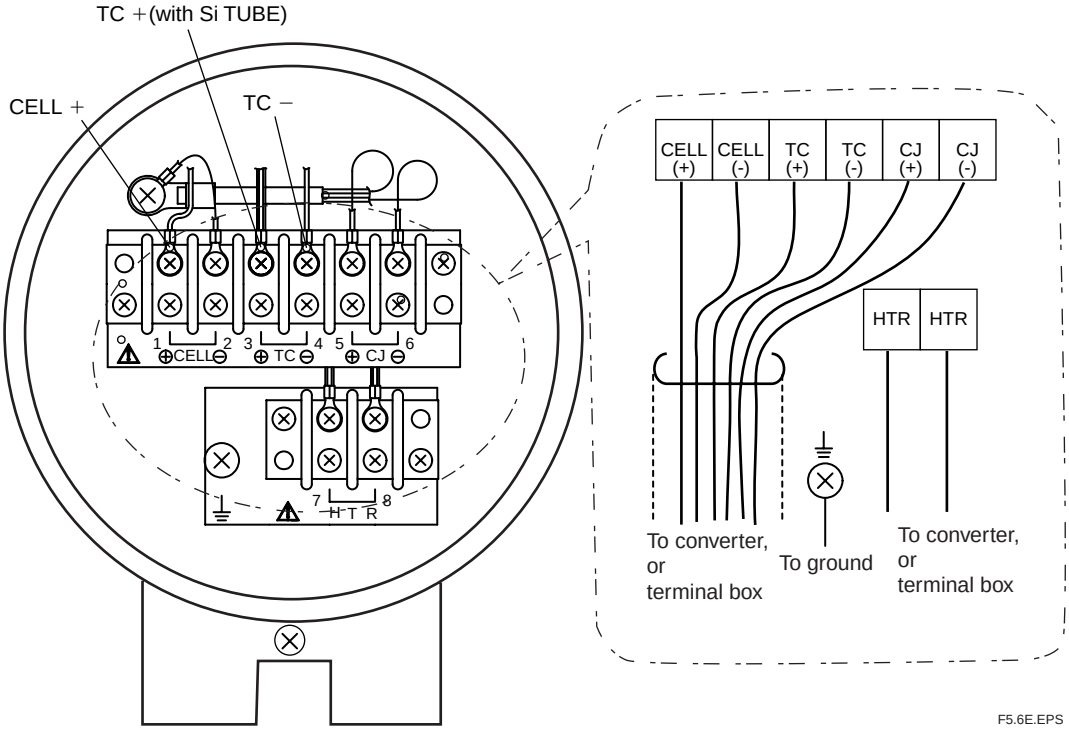

Figure 5.6 Detector terminals

The sizes of the terminal screw threads are M3 except for the M4 on grounding terminal. Each wire in the cable should be terminated in the corresponding size of crimp terminal (*1) respectively.

*1: If the ambient temperature at the detector installation site exceeds 60° C, use a " bare crimp-on terminal".

(4) Except when "600V silicon rubber insulated glass braided wire" is used, connect the cable shield to the FG terminal of the converter.

5.2.3 Connection to the Converter

To connect the wiring to the converter, proceed as follows:

(1) M4 screws are used for the terminals of the converter. Each wire in the cable should be terminated in the corresponding size crimp-on terminal.
(2) When a rubber insulated glass braided wire is used for wiring to the detector, use a terminal box. For wiring between the terminal box and the converter, basically use cable, e.g. PVC sheathed PVC insulated cable, rather than individual wires.

Note

The above is to prevent moisture or corrosive gas from entering the converter and to ground the detector without fail.

5.3 Wiring for Power to Detector Heater

This wiring provides electric power from the converter to the heater for heating the sensor in the detector.

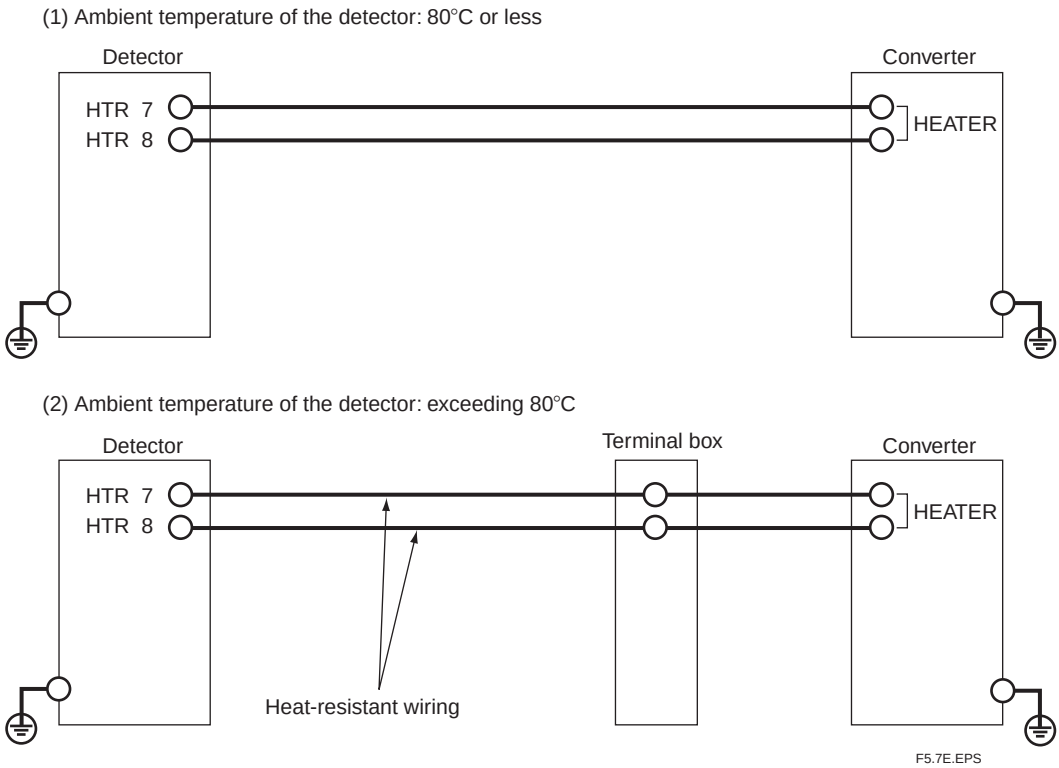

Figure 5.7 Wiring for power to the detector heater

5.3.1 Cable Specifications

Basically, PVC insulated PVC sheathed control cables (2 cores) are used for this wiring. When the ambient temperature of the detector exceeds 80° C, install a terminal box, and connect to the detector using six 600V silicon rubber insulated glass braided wires.

5.3.2 Connection to Detector

When connecting the cable to the detector, proceed as follows:

(1) Mount cable glands or conduits of the specified thread size to the wiring connections of the detector.
The detector may need to be removed in future for maintenance, so be sure to allow sufficient cable length.

(2) If the ambient temperature at the location of wire installation is 80 to 150° C, be sure to use a flexible metallic conduit for the wire. If a non-shielded " 600V silicon rubber insulated glass braided wire" is used, keep the wire away from noise sources to avoid noise interference.

(3) The size of the terminal screw threads is M3. Each cable should be terminated in the corresponding size crimp-on terminals contact (*1) respectively.

*1 If the ambient temperature at the detector installation site exceeds 60° C, use a " bare crimp-on terminal".

CAUTION

- Before opening the detector cover, loosen the lock screw. If the screw is not loosened first, the screw will damage the cover, and the terminal box will require replacement. When opening and closing the cover, remove any sand particles or dust to avoid gouging the thread.
- Notice when closing the cover of the detector
  After screwing the cover in the detector body, secure it with the lock screw.

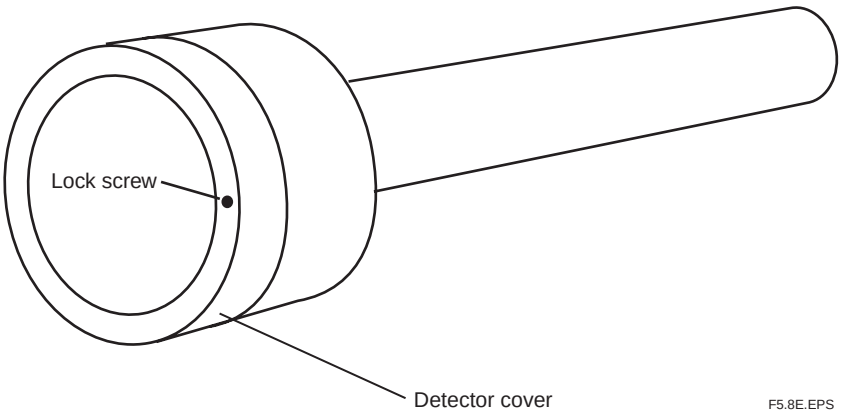

Figure 5.8

5.3.3 Connection to Converter

To connect the wiring to the converter, proceed as follows:

(1) M4 screws are used for the terminals of the converter. Each cable should be terminated in the corresponding size crimp-on terminals.
(2) When a rubber insulated glass braided wire is used for wiring to the detector, use a terminal box. For wiring between the terminal box and the converter, basically use cable, e.g., PVC sheathed PVC insulated cable rather than wire.

Note

The above is to prevent moisture or corrosive gas from entering the converter. Where the ambient environment of the detector and the converter is well-maintained, it is permissible to connect the wiring from the detector directly to the converter with protection by conduits.

5.4 Wiring for Analog Output

This wiring is for transmitting 4 to 20 mA DC output signals to a device, e.g. recorder. Maintain the load resistance including the wiring resistance at 550Ω or less.

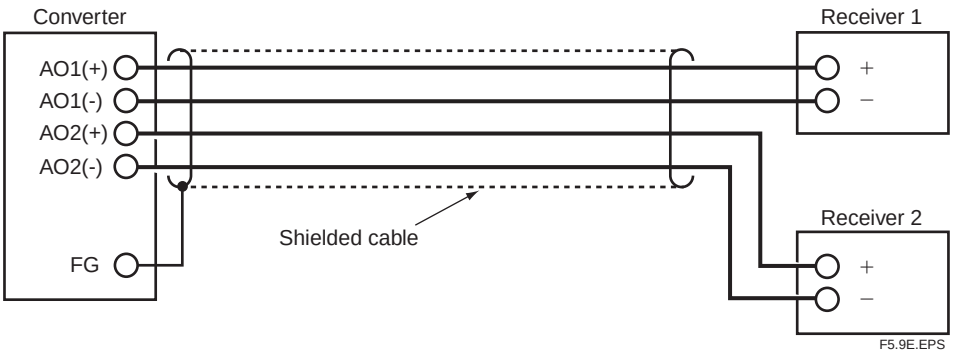

Figure 5.9 Wiring for analog output

5.4.1 Cable Specifications

For this wiring, use a 2-core or a 4-core shielded cable.

5.4.2 Wiring Procedure

(1) M4 screws are used for the terminal of the converter. Each wire of the cable should be terminated corresponding crimp-on terminals. Ensure that the cable shield is connected to the FG terminal of the converter.

(2) Be sure to connect “+” and “-” polarities correctly.

5.5 Power and Grounding Wiring

This wiring supplies power to the converter and grounds the converter/detector.

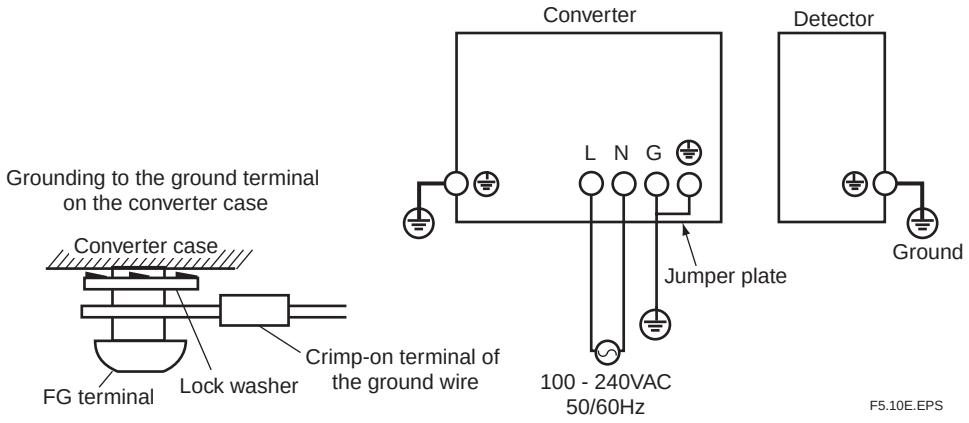

Figure 5.10 Power and Grounding wiring

5.5.1 Power Wiring

Connect the power wiring to the L and N terminals of the converter. Proceed as follows:

(1) Use a 2-core or a 3-core shielded cable.
(2) The size of converter terminal screw threads is M4. Each cable should be terminated corresponding crimp-on terminals.

5.5.2 Grounding Wiring

The ground wiring of the detector should be connected to the ground terminal of the detector case. The ground wiring of the converter should be connected to either the ground terminal of the converter case or the protective ground terminal in the equipment. The grounding terminals of the detector and the converter are of size M4. Proceed as follows:

(1) Keep ground resistance to 100Ω or less (JIS Class 3 ground).
(2) When the ambient temperature of the wiring installation is 80 to 150° C for the wiring of the detector, use wiring material with sufficient heat resistance.
(3) When connecting the ground wiring to the ground terminal of the converter case, be sure that the lock washer is in contact with the case surface (see Figure 5.10.).
(4) Ensure that the jumper plate is connected between the G terminal and the protective ground terminal of the converter.

5.6 Contact Output Wiring

The converter can output a maximum of four contact signals. You can use these contact outputs after you select the type of outputs(e.g., “ low-limit alarm “ or “ high-limit alarm “) from the different output functions.

When using these contact outputs, install the wiring as follows:

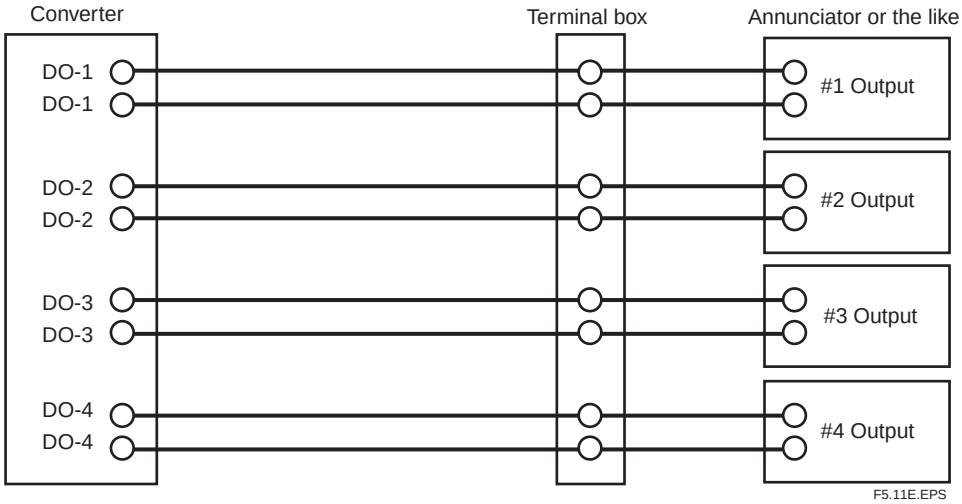

Figure 5.11 Contact output wiring

5.6.1 Cable Specifications

Number of wire in cable varies depending on the number of contact used.

5.6.2 Wiring Procedure

(1) M4 screws are used for the terminals of the converter. Each wire in the cable should be terminated in the corresponding crimp-on terminal.
(2) The capacities of the contact output relay are 30 V DC 3 A, 250 V AC 3 A. Connect a load (e.g. pilot lamp and annunciator) within these limits.

5.7 Wiring for ZR40H Automatic Calibration Unit

This wiring is for operating the solenoid valve for the zero gas and the span gas in the ZR40H Automatic Calibration Unit, in a system where the calibration gas flow rate is automatically controlled (e.g. System configuration 3). When installing this wiring, proceed as follows:

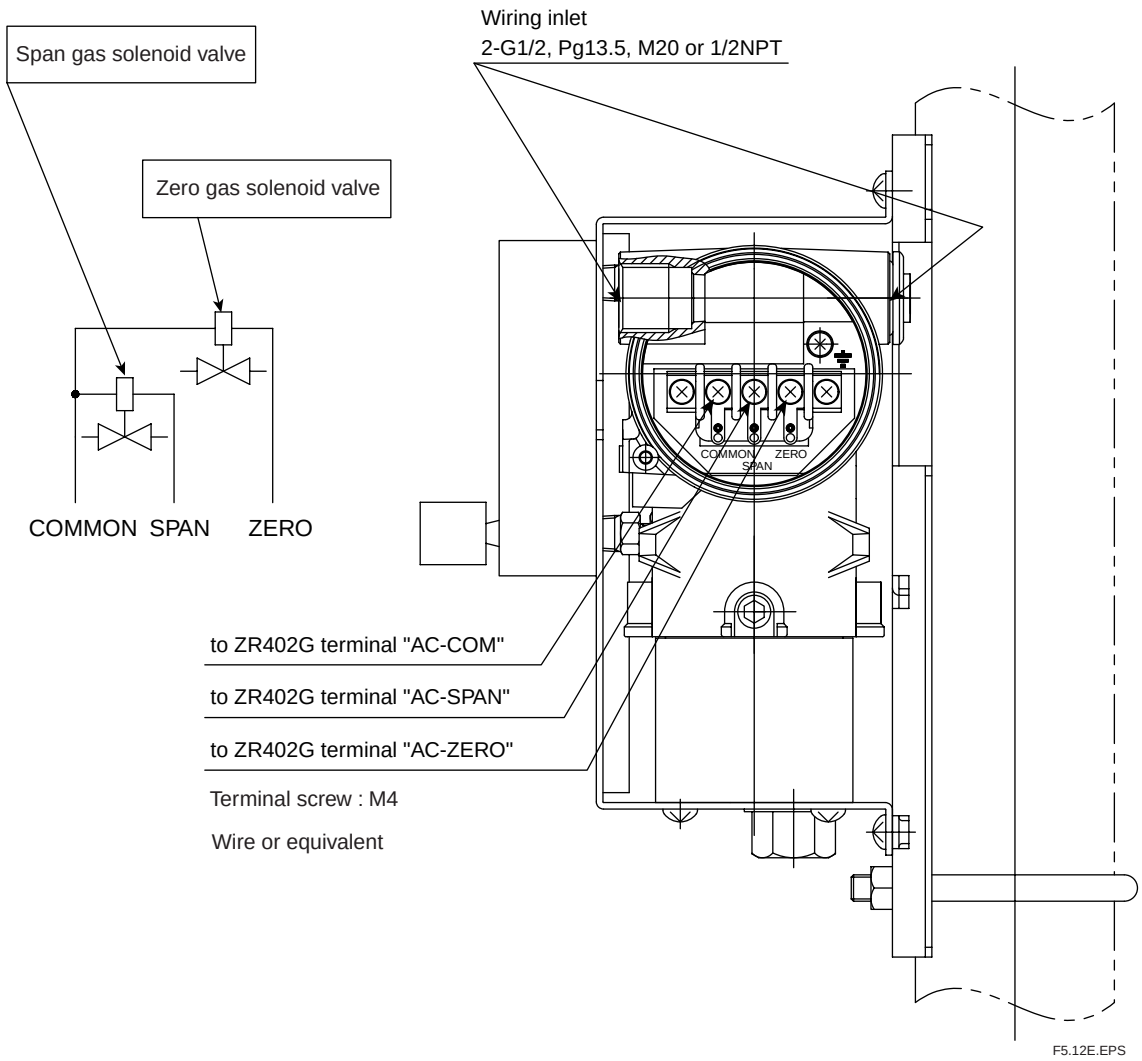

Figure 5.12 Automatic Calibration Unit

5.7.1 Cable Specifications

Use a three-core cable for this wiring.

5.7.2 Wiring Procedure

M4 screws are used for the terminals of the converter. Each cable should be terminated in the corresponding crimp-on terminals. M4 screws are used for the terminals of the solenoid valve as well.

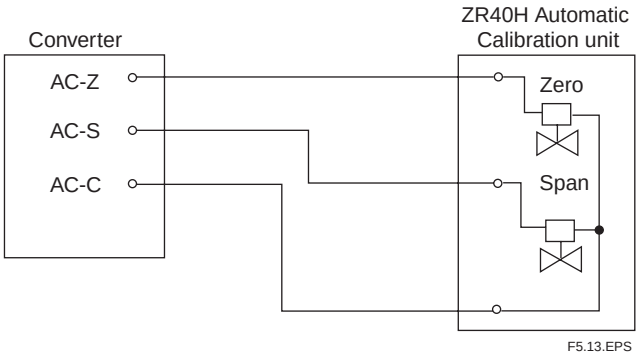

Figure 5.13 Wiring for Automatic Calibration Unit

5.8 Contact Input Wiring

The converter can execute specified function when receiving contact signals.

To use these contact signals, wire as follows:

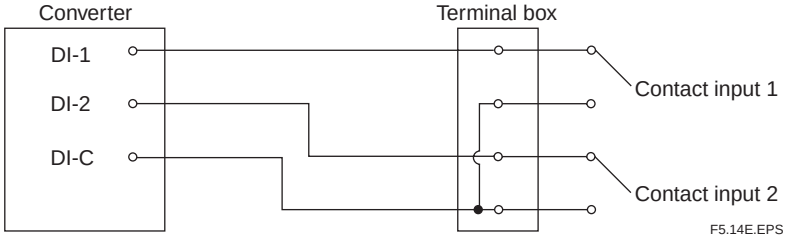

Figure 5.14 Contact Input Wiring

5.8.1 Cable Specifications

Use 2-core or 3-core cable for this wiring. Depending on the number of input(s), determine which cable to use.

5.8.2 Wiring Procedure

(1) M4 screws are used for the terminals of the converter. Each cable should be terminated in the corresponding crimp-on terminal.
(2) The ON/OFF level of this contact input is identified by the resistance. Connect a contact input that satisfies the specifications in Table 5.2.

Table 5.2 Identification of Contact Input ON/OFF

	Closed	Open
Resistance	200 Ω or less	100 kΩ or more

T5.2E.EPS

6. Components

In this Chapter, the names and functions of components are described for the major equipment of the EXAxt ZR Separate-type Zirconia Oxygen Analyzer.

6.1 ZR22G Detector

6.1.1 General-purpose Detector (except for Model ZR22G-015)

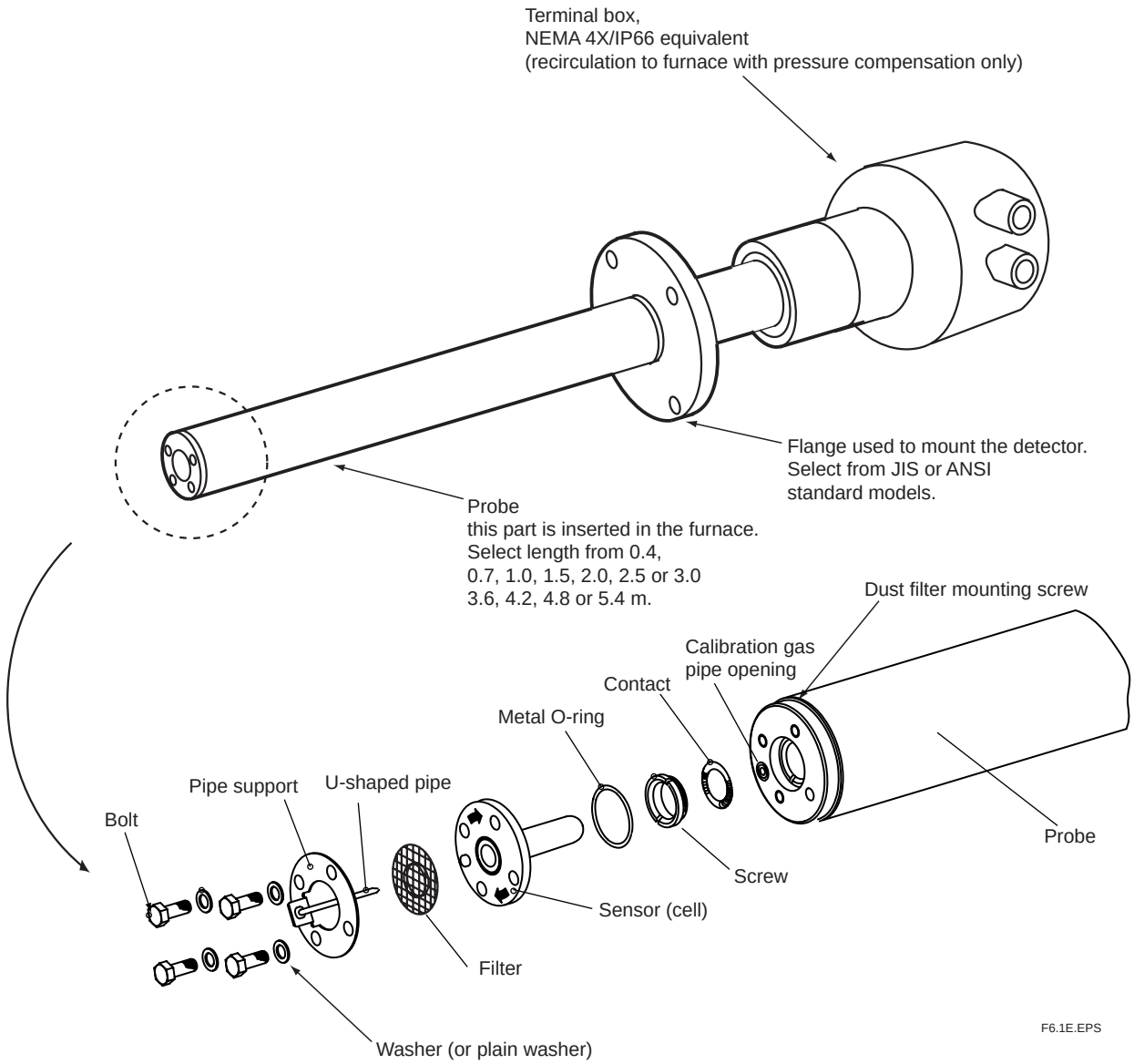

Figure 6.1 General-use Detector (standard type)

6.1.2 High-Temperature Detector (Model ZR22G-015)

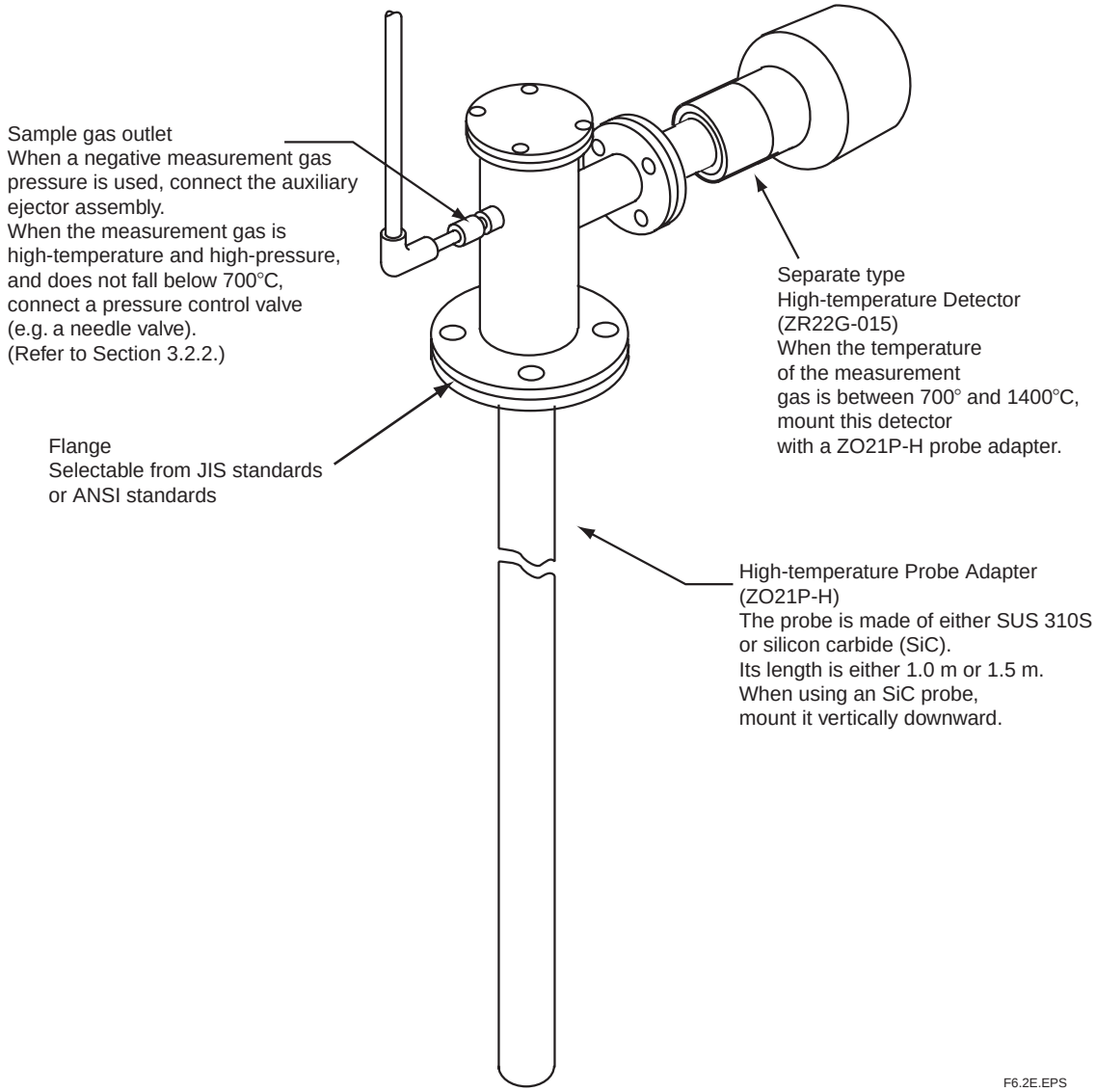

Figure 6.2 High-temperature Detector

6.2 ZR402G Converter

Complete Operation Display

- Interactive operations along with operation display
- A variety of display modes−enabling you to select the operation mode freely
- Back-lit LCD display allows viewing even in areas of low lighting
- Error codes and details of errors are displayed no need to refer to instruction manual
- Password for security

Self-testing suggests countermeasures for problems

If a problem occurs, the liquid-crystal display will provides an error code and description of the problem. This enables prompt and appropriate corrective action to be taken.

Error code	Reason for error
E--1	Cell failure
E--2	Abnormal heater temperature
E--3	Defective A/D converter
E--4	Faulty EEPROM
ALARM1	Abnormal oxygen concentration
ALARM2	Abnormal moisture
ALARM3	Abnormal mixing ratio
ALARM6	Abnormal zero calibration factor
ALARM7	Abnormal span calibration factor
ALARM8	Stabilization time over

Typical Converter Displays

- Example of basic display

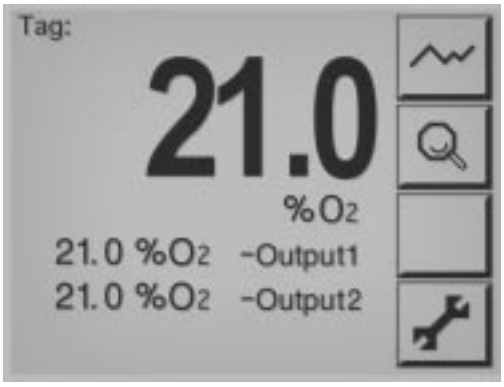

This data display provides for interactive operation.

- Example of trend display−displays data changes

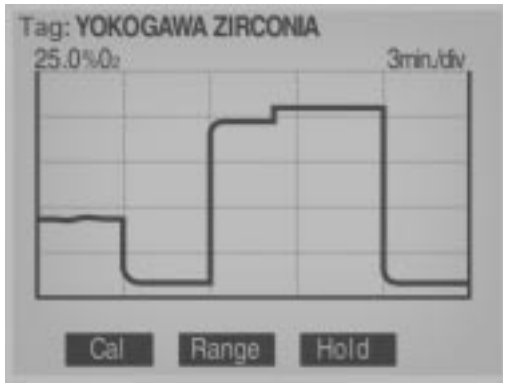

During automatic calibration,you can check has stabilized, display data while viewing oxygen trend data,thus providing highly reliable calibration.

- Example of setting data display−displays data changes

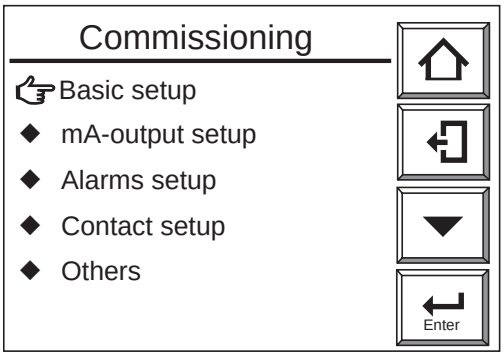

F7.6E.EPS

- One-touch interactive display operation
- User-friendly design providing easy operation without need to use the instruction manual

F6.3E.EPS

Figure 6.3 Converter

6.3 ZA8F Flow Setting Unit, ZR40H Automatic Calibration Unit

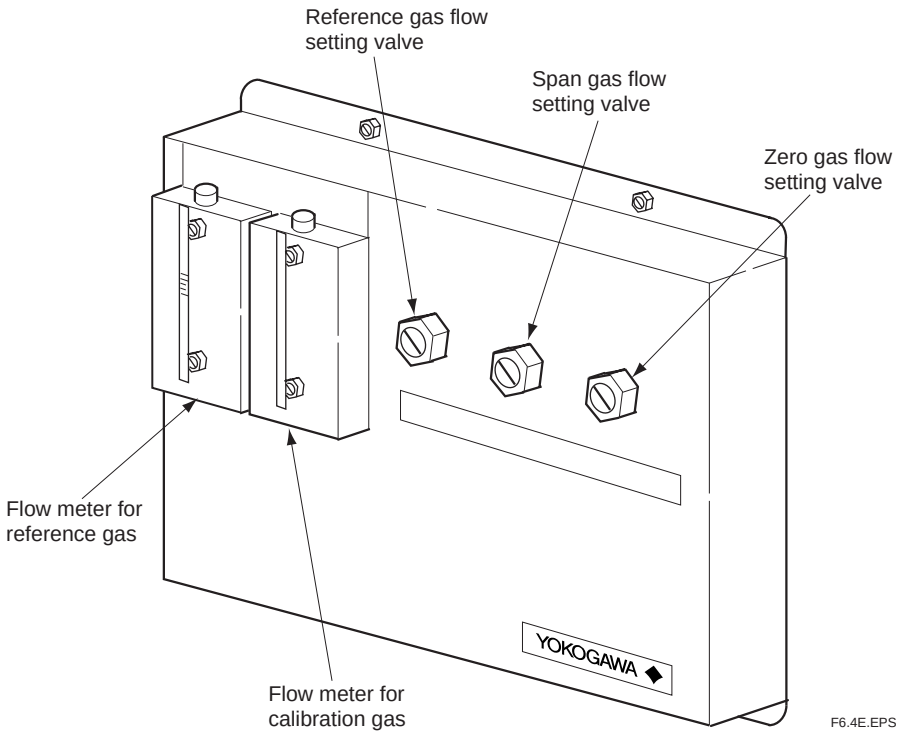

Figure 6.4 ZA8F Flow Setting Unit

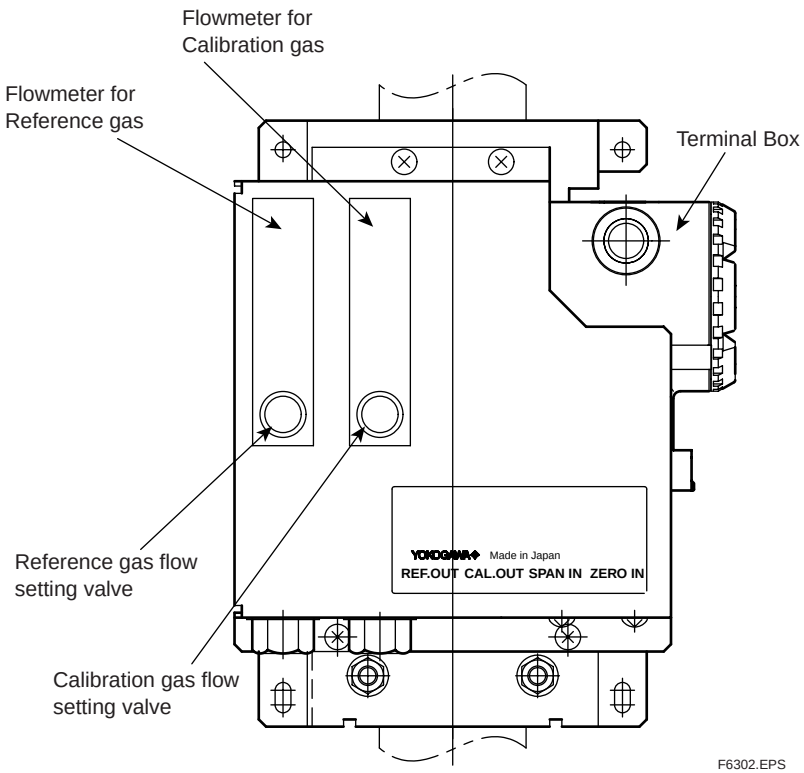

Figure 6.5 ZR40H Automatic Calibration Unit

7. Startup

The following describes the minimum operating requirements — from supplying power to the converter to analog output confirmation to manual calibration.

System tuning by the HART communicator, refer to IM11M12A01-51E " HART Communication Protocol ".

7.1 Checking Piping and Wiring Connections

Check that the piping and wiring connections have been properly completed in accordance with Chapter 4, “Piping,” and Chapter 5, “Wiring.”

7.2 Checking Valve Setup

Set up valves and associated components used in the analyzer system as follows:

(1) If a stop valve is used in the detector’s calibration-gas inlet, fully close this valve.
(2) If instrument air is used as the reference gas, adjust the air-set secondary pressure so that an air pressure equals measured gas pressure plus approx. 50 kPa (or measured gas pressure plus approx. 150 kPa when a check valve is used, maximum pressure rating is 300 kPa) is obtained. Turn the reference-gas flow setting valve in the flow setting unit to obtain a flow of 800 to 1000 ml/min. (Turning the valve shaft counter-clockwise increases the rate of flow. Before turning the valve shaft, if the valve has a lock nut, first loosen the lock nut.) After completing the valve setup, be sure to tighten the lock nut.

Note

The calibration-gas flow setting is described later. Fully close the needle valve in the flow setting unit.

7.3 Supplying Power to the Converter

CAUTION

To avoid temperature changes around the sensor, it is recommended that (rather than turning it on and off) power be continuously supplied to the Oxygen Analyzer if it is used in an application where it is used periodically.

It is also recommended to flow a span gas (instrument air) beforehand.

Supply power to the converter. A display as in Figure 7.1, which indicates the detector's sensor temperature, then appears. As the heat in the sensor increases, the temperature gradually rises to 750° C. This takes about 20 minutes after the power is turned on, depending somewhat on the ambient temperature and the measured gas temperature. After the sensor temperature has stabilized at 750° C, the converter is in measurement mode. The display panel then displays the oxygen concentration as in Figure 7.2. This is called the basic panel display.

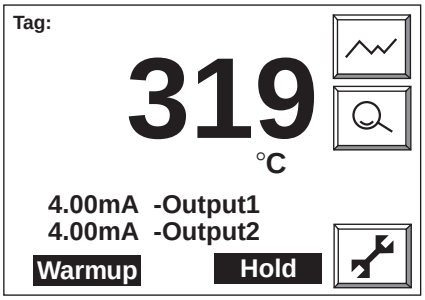

Figure 7.1 Sensor Display During Warmup

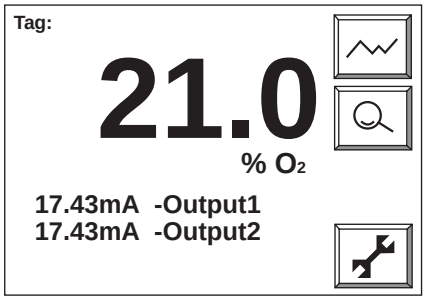

Figure 7.2 Measurement Mode Display

7.4 Touchpanel Switch Operations

7.4.1 Basic Panel and Switch

The converter uses a touchpanel switch which can be operated by just touching the panel display. Figure 7.3 shows the basic panel display. The switches that appear in the switch display area vary depending on the panel display, allowing all switch operations. Table 7.1 shows the switch functions.

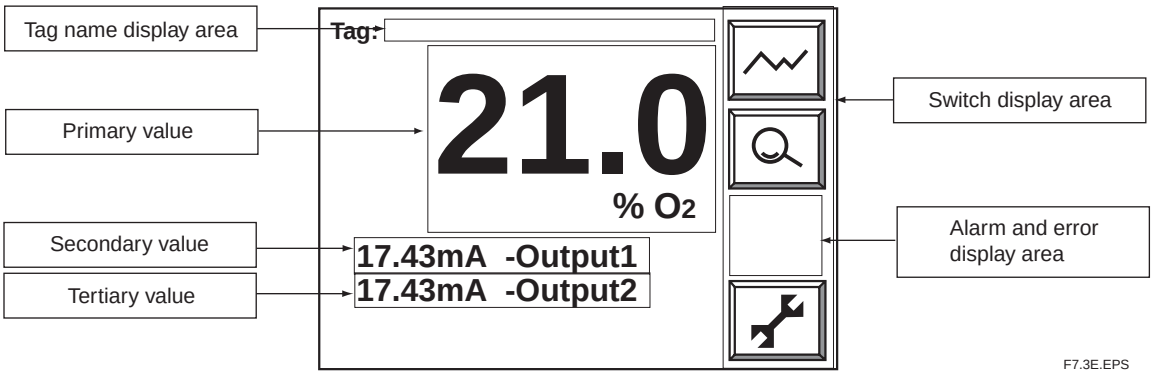

Figure 7.3 Basic Panel Display

Tag name display area: Displays the set tag name (Refer to Section 10.1.4, “Entering Tag Name”).

Primary to tertiary display items: Displays the selected item. (Refer to Section 7.9, “Setting Display Item”.)

Switch display area: Displays switches and functions selected according to the panel display.

Alarm and error display area: Displays an error if an alarm or error occurs. If you touch this area, the details of the error or alarm are then displayed.

Table 7.1 Switches and Their Functions

	Home key: Returns to the Execution/Setup display.	Enter	Enter key: Enters the input value and sets up the selected item.
	Reject key: Moves back to the previous display.		Setup key: Used to enter the Execution/Setup display.
	Cursor key: Moves the cursor down.		Detailed-data key: Displays the analog input value.
	Graph display key: Displays a trend graph.		Cursor: Points the cursor at the currently selected item.
	Alarm: Displayed if an alarm arises.		Error: Displayed if an error occurs.

T7.1E.EPS

7.4.2 Display Configuration (for Oxygen Analyzer)

Figure 7.3.1 shows the configuration. A password the displays positioned below enables display Execution/Setup to be protected. If a password has not been set, press the [Enter] key to proceed to the next panel display. The Home key enables you to return to Execution/Setup from any panel display.

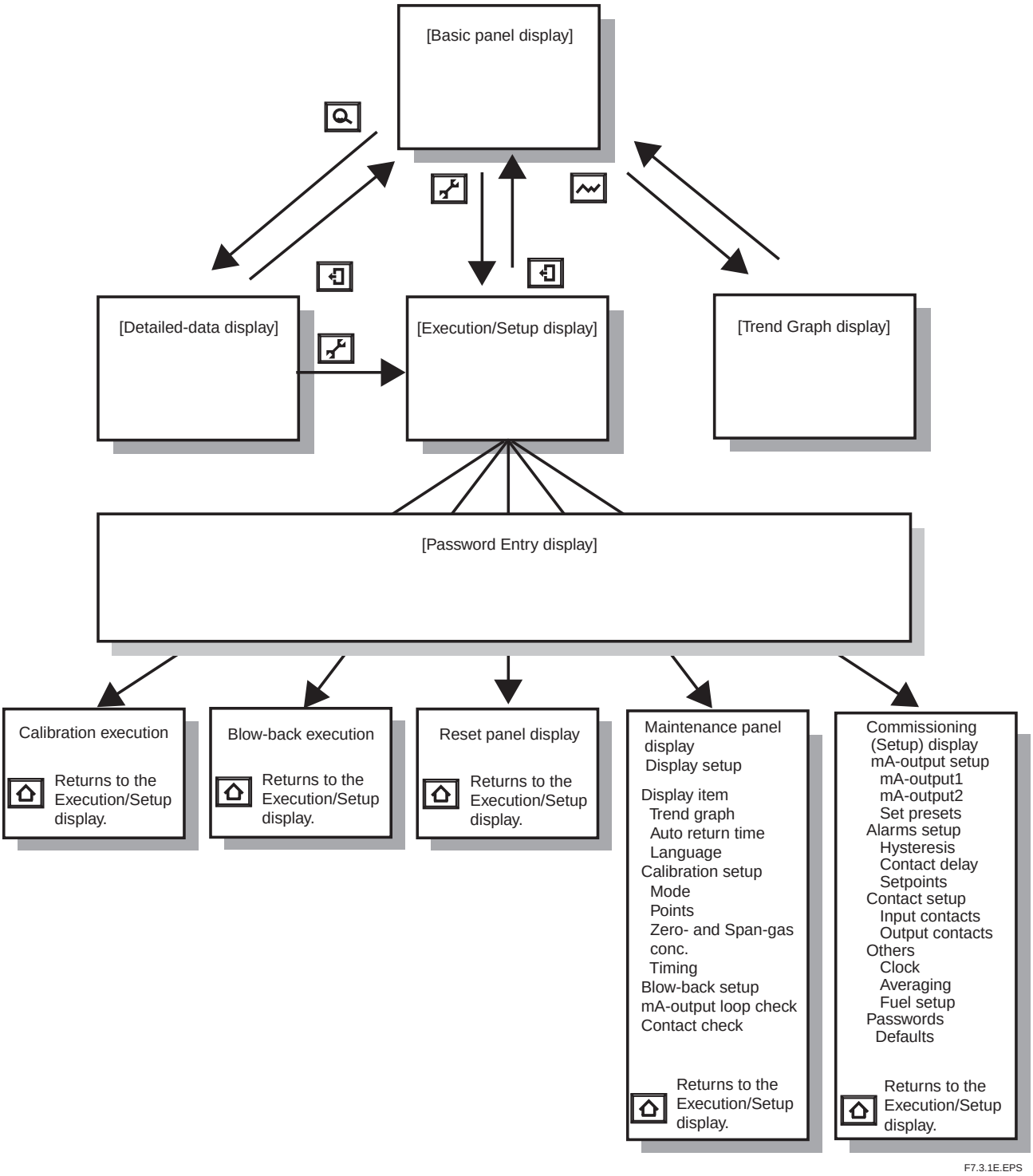

Figure 7.3.1 Display Configuration

7.4.3 Display Functions

Individual panel displays in the display configuration provide the following functions:

(1) Basic panel display: Displays the values measured in three selected items (see Section 7.9, “Setting Display Items”).
(2) Execution/Setup display: Selects the calibration, maintenance and setup items.
(3) Detailed-data display: This allows you to view such detailed data as the cell electromotive force and cell temperature (see Section 10.1.1, “Detailed-data Display,” later in this manual).
(4) Trend Graph display: Displays a trend graph (see Section 10.1.2, “Trend Graphs,” later in this manual).
(5) Calibration execution: Makes zero and span calibrations (see Chapter 9, “Calibration,” and the associated sections later in this manual).
(6) Blow-back execution: Executes a “blow back” (see Section 10.2, “Blow Back,” later in this manual).
(7) Reset panel display: If an error arises, you can restart the equipment from this display (for more details, see Section 10.4, “Reset,” later in this manual).
(8) Maintenance panel display: Sets the data for equipment maintenance or makes a loop check.
(9) Commissioning (Setup) display: Sets up the operation data. (For details, see Chapter 8, “Detailed-data Settings,” and the associated sections later in this manual.)

7.4.4 Entering Numeric and Text Data

This section sets out how to enter numeric and text data. If only numeric values are entered, a numeric-data entry display as in Figure 7.4 then appears. Press the numeral keys to enter numeric values. If those values include a decimal point as in Figure 7.4, the decimal point need not be entered because the decimal point position is already fixed, so just enter 00098.

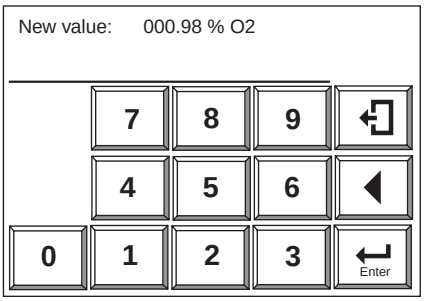

F7.4E.EPS

Figure 7.4 Numeric-data Entry Display

To enter a password (in combination with text data, numeric values and codes), the alphabetic character entry panel display first appears. If you press any numeral key (0 to 9), the current display then changes to the numeric-value entry panel display, enabling you to enter numeric values. If you press the “other” key, the current display then changes to the code-entry display, enabling you to enter codes. These displays alternate between the three. Figure 7.5 shows the relationship between these three displays. Three alphabetic characters and three codes are assigned for each individual switch. If the alphabetic character key is pressed and held, three characters appear in turn. Move the cursor to the desired character and release the key to enter it. If an incorrect character is entered, move the cursor to re-enter the characters. The following shows an example of entering “abc%123.”

Operation	Display
Press the [ABC] key once.	A–
Press and hold the [ABC] key.	A A B → C
Release the [ABC] key when the character B appears in the cursor position.	AB–
Enter the character C in the same manner as above. Press the [other] key.	ABC–
Press and hold the [$%&] key and enter “%.” Then press the [0-9] key.	ABC%–
Enter the numeric characters 1, 2 and 3 in turn. Press the [Enter] key to complete the entry.	ABC%123–

Siki7.4E

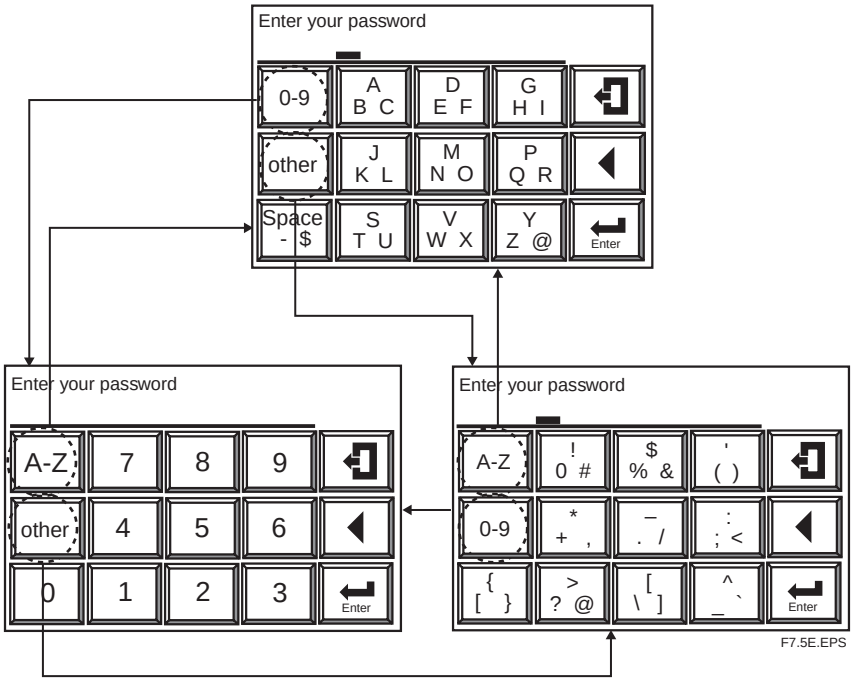

Figure 7.5 Text Entry Display

7.5 Confirmation of Converter Type Setting

This converter can be used for both the Oxygen Analyzer and the Humidity Analyzer. Before setting the operating data, be sure to check that the desired converter model has been set.

Note that if the converter type setting is changed, the operating data that have been set are then initialized and the default settings remain. To set the desired operating data, follow these steps:

(1) Press the setup key.
(2) Use the▼ key to select Setup and press the [Enter] key.
(3) In the password display, enter the [Enter] key. If the password is to be set again, enter the new password (for details, see Section 8.6.4, “Passwords,” later in this manual).
(4) The Setup display shown in Figure 7.6 appears. Select “Basic setup” and press the [Enter] key.
(5) The Basic setup display shown in Figure 7.7 then appears. Confirm the currently set converter type. If the Humidity Analyzer option /HS was selected at the time of purchase, the converter was set for high-temperature humidity use before shipment.
(6) If the converter type is to be changed, press the [Enter] key. The display shown in Figure 7.8 then appears.
(7) Use the ▼ key to select the type of equipment. Then press the [Enter] key to complete the converter selection.
(8) If the type of converter is changed after setting the operating data, those data are then initialized and the default settings remain. Reset the operating data to meet the new type of equipment.

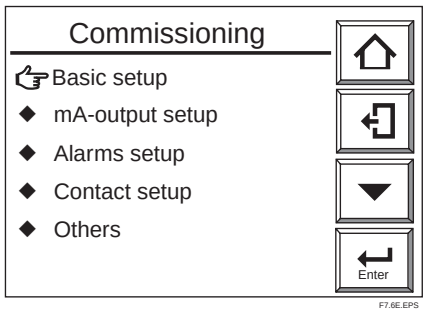

Figure 7.6 Setup Display

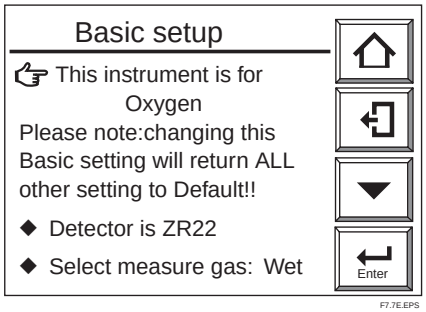

Figure 7.7 Basic Setup

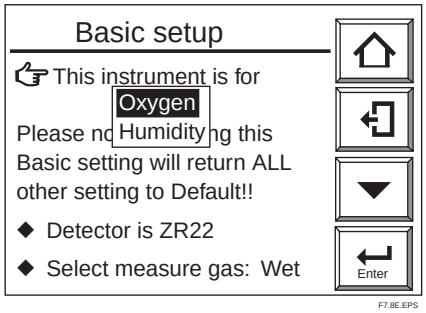

Figure 7.8 Equipment Setup

7.6 Confirmation of Detector Type Setting

Check that the detector in Figure 7.7 is the one for this equipment.

WARNING

- If this converter is to be used in conjunction with the ZO21D, the power requirements are limited to 125 V AC or less, 50 Hz or 60 Hz (it cannot be used with a 125 V or greater, or in the EEC).
- If detector settings are to be changed, first disconnect the wiring connections between the detector and the converter. Then change detector settings appropriately.

7.7 Selection of Measurement Gas

Combustion gases contain moisture created by burning hydrogen in the fuel. If this moisture is removed, the oxygen concentration might be higher than before. You can select whether the oxygen concentration in a wet gas is to be measured directly, or compensated for its dry-gas value before use. Select the “Select measure gas: Wet” in Figure 7.8 to select either wet or dry gas.

7.8 Output Range Setting

This section sets forth analog output range settings. For details, consult Section 8.1,”Current Output Settings,” later in this manual.

7.8.1 Minimum Current (4 mA) and Maximum Current (20 mA) Settings

To set the minimum and maximum current settings, follow these steps:

(1) Select the Setup from the Execution/Setup display.
(2) From the Commissioning (Setup) display, select “mA-output setup”; the display shown in Figure 7.9 then appears.
(3) Select “mA-output1” from the “mA-outputs” display. The “mA-output1 range” display shown in Figure 7.10 then appears.
(4) In the display shown in Figure 7.10, select “Min. oxygen conc.” and press the [Enter] key to display the numeric-value entry display. Enter the oxygen concentration at a 4-mA output; enter [010] for a ten-percent concentration measurement.
(5) Also in Figure 7.10, select “Max. oxygen conc.” at a 20-mA output. Enter the appropriate maximum oxygen concentration (at the 20-mA output) in the same manner as in step 4 above.
(6) Set “mA-output2” in the same manner as in the appropriate steps above.

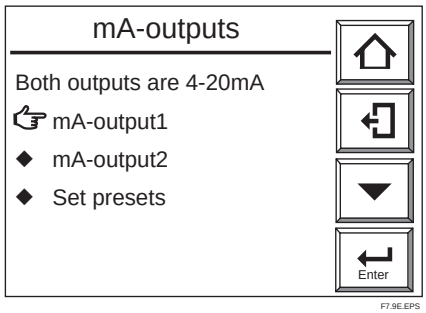

Figure 7.9 Setting “mA-output”

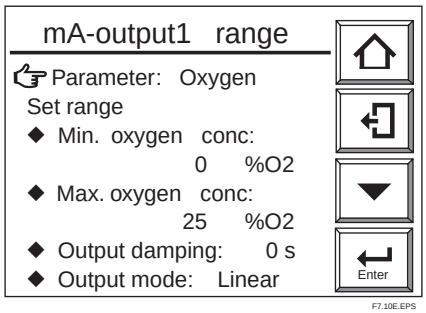

Figure 7.10 Setting “mA-output1 range”

7.9 Setting Display Item

This section briefly describes the display item settings shown in Figure 7.11, “Basic Panel Display.”

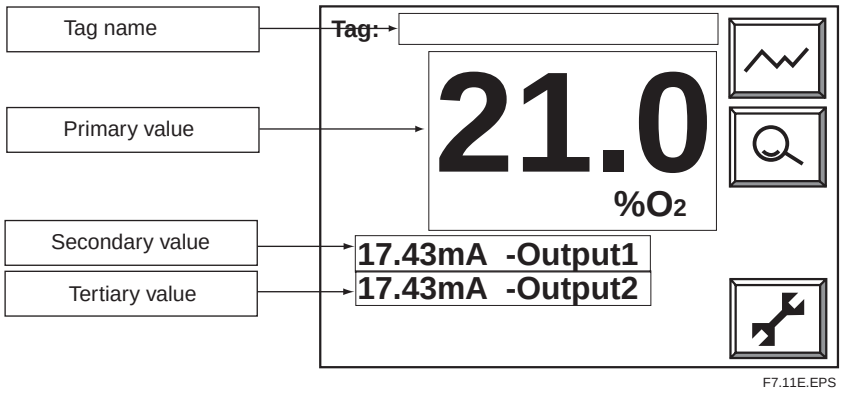

Figure 7.11 Basic Panel Display

(1) Press the Setup key in the basic panel display to display the Execution/Setup display. Then select Maintenance in the Execution/Setup display.
(2) Select the Display setup from the Maintenance panel display (Figure 7.12). The Display setup display (Figure 7.13) then appears.
(3) In the above Display setup display, select the Display item. The Display item display (Figure 7.14) then appears. From this display, select the Primary value and press the [Enter] key to display the Display item selection display (Figure 7.15).
(4) Select the Secondary and Tertiary values in the same manner as in the steps above.
(5) Consult Table 7.2, “Display Items,” enabling the selection of display items in individual display areas.

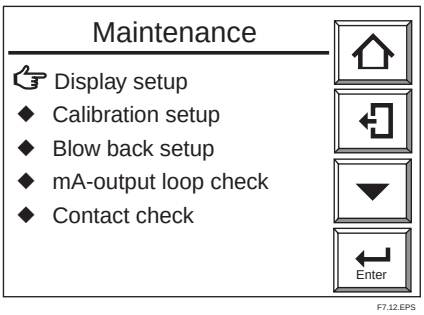

Figure 7.12 Maintenance Panel Display

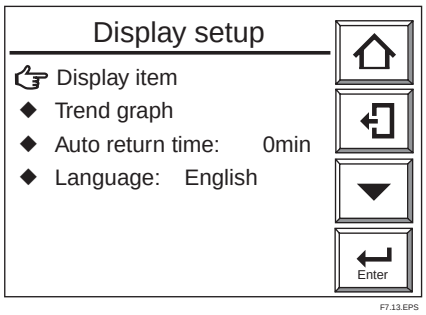

Figure 7.13 Display Setup

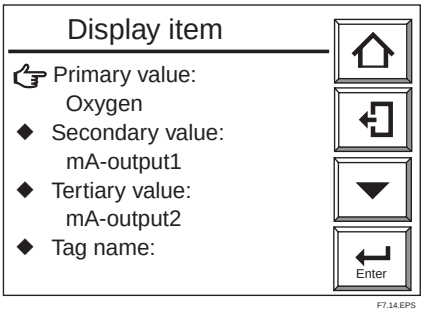

Figure 7.14 Display Item Display

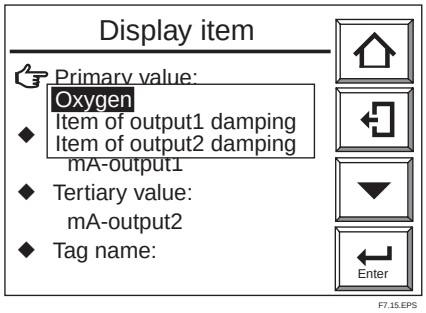

Figure 7.15 Display Item Selection

Table 7.2 Display Items

Item	Primary value	Secondary and tertiary values	Display
Oxygen concentration	○	○	Oxygen concentration during measurement
Air ratio		○	Current computed air ratio
Moisture quantity		○	Moisture quantity (%H_2O) in the exhaust gas
Output 1 item	○	○	Oxygen concentration with the equipment set for oxygen analyzer (See *1 below.)
Output 2 item	○	○	Oxygen concentration with the equipment set for oxygen analyzer (See *1 below.)
Current output 1		○	Current value output from analog output 1
Current output 2		○	Current value output from analog output 2

*1: If an analog output damping constant is set, the oxygen concentration display then includes these settings.

T7.2E.EPS

About the air ratio:
"Air ratio" is defined as the ratio of (the amount of air theoretically required to completely burn all the fuel) to (the amount of air actually supplied).

For this equipment, the air ratio will be obtained in a simplified way by measuring the oxygen concentration in the exhaust gas. The air ratio may be expressed mathematically by:

$$m = \{1 / (21 - \text{Oxygen concentration})\} * 21$$

If you use the air ratio data for estimating the combustion efficiency, etc., check that no air is leaking in beforehand and that the measured value has not been affected by any interference gas (CH_4, CO, H_2, etc.).

About moisture quantity:
The moisture quantity in the exhaust gas is calculated based on the parameters of the fuel setting (refer to Section 8.6.3, "Fuel Settings," later in this manual). The moisture content may be expressed mathematically by:

Moisture quantity = {(water vapor content per fuel unit quantity) + (water content in air)}/ total amount of exhaust gas

$$= (Gw + 1.61 * Z * Ao * m)/(X + Ao * m)$$

where,

Gw = water vapor content in exhaust gas, m^3/kg (m^3)

Z = Ambient absolute humidity, kg/kg

Ao = Ideal air amount, m^3/kg (m^3)

m = Air ratio

X = Fuel coefficient, Nm^3/kg or m^3/m^3

For details on each parameter, refer to Section 8.6.3, "Fuel Settings."

7.10 Checking Current Loop

The set current can be output as an analog output.

(1) Press the Setup key on the basic panel display to display the Execution/Setup display. Then select Maintenance in the Execution/Setup display.
(2) Select “mA-output loop check” in the Maintenance panel display to display the “mA-output loop check” display, enabling you to check “mA-output1” and “mA-output2.” Select the desired output terminal for current-loop checking (see Figure 7.15.1).
(3) At the time of entering the numeric-data entry display, the output current will change to 4 mA (default value). If the desired current is entered, the corresponding output will be provided.

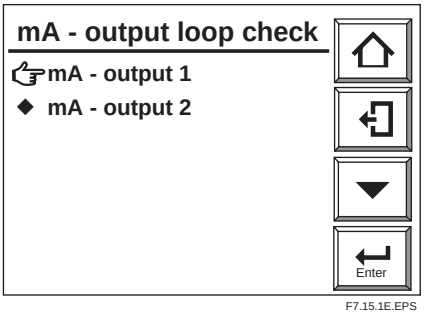

Figure 7.15.1 “mA-output loop check” Panel Display

7.11 Checking Contact I/O

Conduct the contact input and output checking as well as operational checking of the solenoid valves for automatic calibration.

7.11.1 Checking Contact Output

To check the contact output, follow these steps:

(1) Press the Setup key in the basic panel display to display the Execution/Setup display. Select Maintenance in that display.
(2) Select Contact check then contact output in the Maintenance panel display to display the Output contact check display (see Figure 7.15.2).
(3) In this display, select the desired output contact for checking. The display, which enables the closing and opening of contacts, then appears. Use the display to conduct continuity checking.

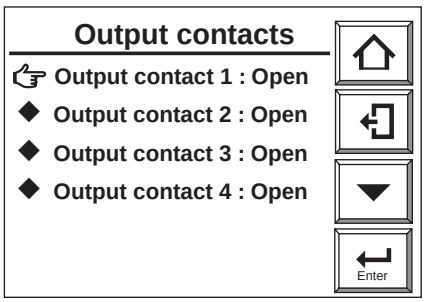

F7.15.2E.EPS

Figure 7.15.2 Output Contact Check Panel Display

CAUTION

- If you conduct an open-close check for contact output 4, Error 1 or Error 2 will occur. This is because the built-in heater power of the detector, which is connected to contact output 4, is turned off during the above check. So, if the above error occurs, reset the equipment or turn the power off and then back on to restart (refer to Section 10.4, “Resetting,” later in this manual).

7.11.2 Checking Calibration Contact Output

The calibration contacts are used for solenoid valve drive signals for the ZR40H Automatic Calibration Unit. When using the ZR40H Automatic Calibration Unit, use the calibration contact output to check that the wiring connections have been properly completed and check equipment operation.

(1) Referring to Section 7.11.1, display the contact check display.
(2) Select the Calibration contacts to display the panel display as Figure 7.15.3 shows.
(3) Open the zero-gas contact and the span-gas contact. This will help check the automatic calibration unit and wiring connections.

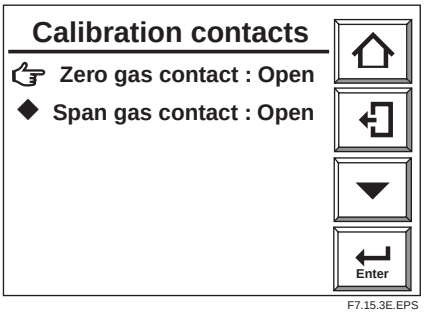

Figure 7.15.3 Calibration Contact Check Display

Note

"Open" and "Closed" displayed on the Calibration contact display indicate actions of drive contacts and are opposite to the valve open and close actions. If Open is displayed on the Calibration contact display, no calibration gas flows. If Closed is displayed on that display, calibration gas flows.

7.11.3 Checking Input Contacts

(1) Referring to Section 7.11.1, display the contact check display.
(2) Display the input contact check display as Figure 7.15.4 shows. The "open" or "closed" input contact in the display shows the current contact input terminal status and the display changes according to the contact status. Using this enables you to check that the wiring connections have been properly completed.

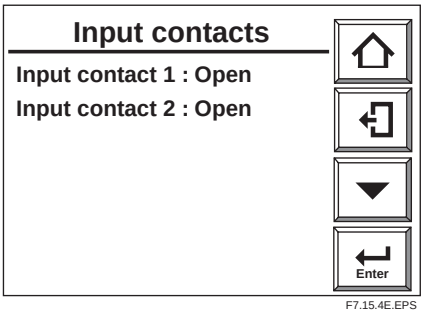

Figure 7.15.4 Input Contact Check Display

7.12 Calibration

The converter is calibrated in such a way that the actual zero and span gases are measured and those measured values are used to agree with the oxygen concentrations in the respective gases.

There are three types of calibration procedures available:

(1) Manual calibration conducting zero and span calibrations, or either of these calibrations in turn.
(2) Semi-automatic calibration which uses the touchpanel or a contact input signal and conducts calibration operations based on a preset calibration time and stable time.
(3) Automatic calibration conducted at preset intervals.

Manual calibration needs the ZA8F Flow Setting Unit to allow manual supply of the calibration gases. Semi-automatic and automatic calibrations need the ZR40H Automatic Calibration Unit to allow automatic supply of the calibration gases. The following sections set forth the manual calibration procedures. For details on semi-automatic and automatic calibrations, consult Chapter 9, “Calibration,” later in this manual.

7.12.1 Calibration Setup

7.12.1.1 Mode Setting

For the mode setting, do the following:

Press the Setup key in the basic panel display to display the Execution/Setup display. Select Maintenance in the Execution/Setup display to display the Maintenance panel display. Then select Calibration setup to display the Calibration setup display as Figure 7.16 shows. Select Mode in this panel, and then select “Manual,” “Semi-Auto” or “Auto.”

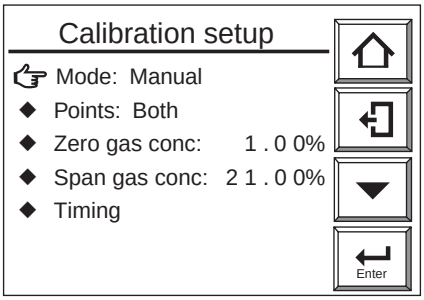

F7.16E.EPS

Figure 7.16 Calibration Setup

7.12.1.2 Calibration Setting Procedures

Select “Points” (calibration procedure) in the Calibration setup display to display the “Span – Zero,” “Span, Zero” selection display. In this display, select “Span – Zero.”

7.12.1.3 Calibration Gas Concentration Setting

(1) Zero-gas concentration
If zero-gas concentration is selected, the Numeric-data Entry display then appears. Use this display to enter an oxygen concentration value for the zero-gas calibration; if the oxygen concentration is 0.98 vol%O_2, enter 00098.

(2) Span-gas concentration
With “Span gas conc” selected in the Calibration setup display, display the Numeric-data Entry display and enter an oxygen concentration value for the span-gas calibration; If instrument air is used, enter 02100 for a 21 vol% O_2 value.
When using the ZO21S Standard Gas Unit (for use of the atmospheric air as a span gas), use a hand-held oxygen analyzer to measure the actual oxygen concentration, and then enter it.

CAUTION

If instrument air is used for the span gas, dehumidify the air down to a dew point of -20° C and remove any oil mist or dust.

7.12.2 Manual Calibration

7.12.2.1 Preliminary

Before performing manual calibration, be sure that the ZA8F Flow Setting Unit zero-gas flow valve is fully closed. Open the zero-gas cylinder pressure regulator so that the secondary pressure equals measured gas plus approx. 50 kPa (or measured gas pressure plus approx. 150 kPa when a chack valve is used, maximum pressure rating is 300 kPa).

This applies even if you are using the ZR40H Auto Calibration Unit.

7.12.2.2 Calibration Procedures

This manual assumes that the instrument air is the same as the reference gas used for the span gas. Follow the steps below to conduct manual calibration:

(1) Press the Setup key in the basic panel display to display the Execution/Setup display. Then select Calibration in the Execution/Setup display. In doing so, the Calibration display as in Figure 7.17 appears.

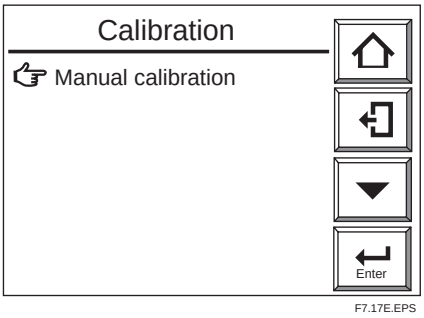

Figure 7.17 Calibration Display

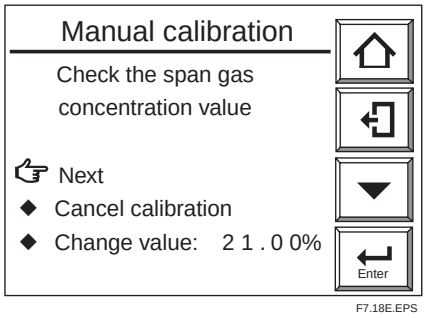

Figure 7.18 Manual Calibration

(2) Press the [Enter] key to select span-gas calibration. The Manual calibration display shown in Figure 7.18 then appears. Check that the oxygen concentration for the span gas in this display coincides with the oxygen concentration in the calibration gas actually used. If the check results are assumed to be OK, select Next in the Manual calibration display.

(3) Follow the display message in Figure 7.19 to turn on span gas flow. Open the span-gas flow valve for the Flow Setting Unit by loosening the valve lock-nut and slowly turning the valve shaft counterclockwise to flow the span gas at 600 ml/min. ± 60 ml/min. Use the calibration gas flowmeter to check the flow.

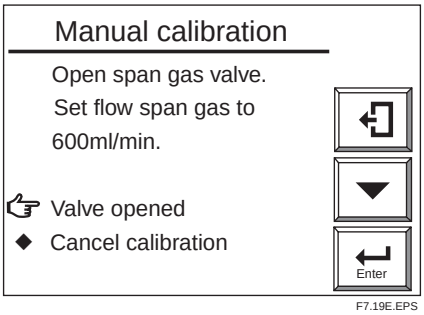

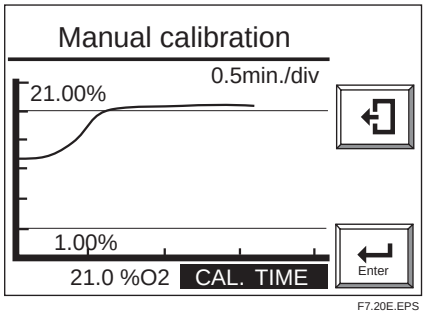

Figure 7.19 Span-gas Flow Display

Figure 7.20 Manual Calibration Trend Graph (for Manual Calibration)

(4) If "Valve opened" is selected as in Figure 7.19 , an oxygen-concentration trend graph (with the oxygen concentration being measured) appears (see Figure 7.20). The CAL TIME in the bottom area of the panel flashes. Observe the trend graph and wait until the measured value stabilizes in the vicinity of 21 percent on the graph. At this point, calibration has not yet been executed yet, so even if the measured value is above or below 21 percent, no problem occurs.

(5) After the measured value has stabilized, press the [Enter] key to display the "span-calibration complete" display shown in Figure 7.21. At that point, the measured value is corrected to equal the span-gas concentration setting. Close the span-gas flow valve. The valve lock-nut should be tightened completely so that the span gas does not leak.

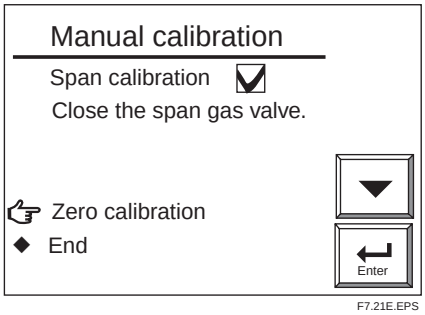

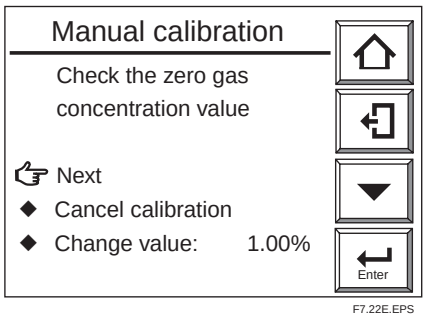

Figure 7.21 Span Calibration Complete Zero calibration start Display

Figure 7.22 Zero-gas Concentration Check Display (in Manual Calibration)

(6) Select Zero calibration as in Figure 7.21 to display the zero-gas concentration check display (Manual calibration) . Check that the zero-gas oxygen concentration value and the calibration gas oxygen concentration value agree. Then select Next as in Figure 7.22.

(7) Follow the instructions in the display as in Figure 7.23 to turn on the zero gas flow. To do this, open the zero-gas flow valve for the Flow Setting Unit and adjust that valve to obtain a flow of 600 ml/min. ± 60 ml/min.
(The valve should be adjusted by loosening its lock nut and slowly turning the valve shaft counterclockwise. Use the calibration gas flowmeter to check the flow.)

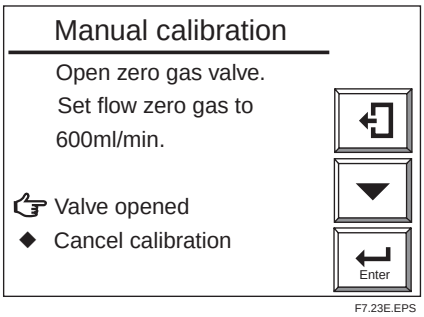

Figure 7.23 Zero-gas Flow Display (for Manual calibration)

(8) If "Valve opened" is selected as in Figure 7.23 , an oxygen-concentration trend graph (with the oxygen concentration being measured) appears (see Figure 7.25). The CAL TIME in the bottom area of the panel flashes. Observe the trend graph and wait until the measured value stabilizes in the vicinity of the zero-gas concentration on the graph. At this point, no calibration has been executed yet, so even if the measured value is above or below the zero-gas concentration value, no problem occurs.

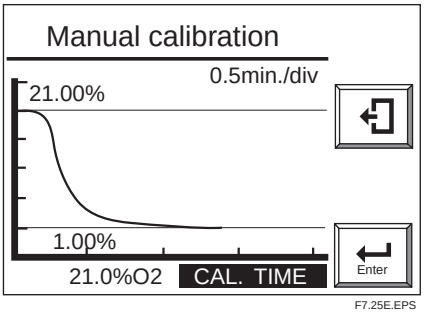

Figure 7.25 Manual Calibration, Trend Graph

(9) After the measured value has stabilized, press the [Enter] key to display the "zero-calibration complete" display shown in Figure 7.26. At this point, the measured value is corrected to equal the zero-gas concentration, setting are made to agree. Close the zero-gas flow valve. The valve lock-nut should be tightened completely so that the zero gas does not leak.

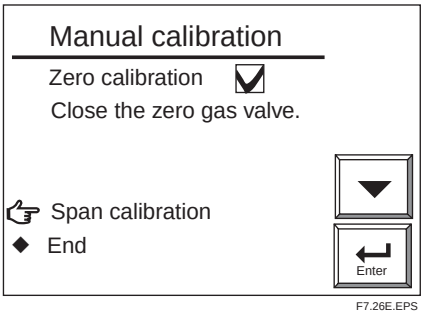

Figure 7.26 Zero Calibration Complete Display

(10) Select End in the display as shown in Figure 7.26. An oxygen concentration trend graph (with the oxygen concentration being measured) appears and HOLD TIME then flashes. This time is referred to as the output-stabilization time. If the HOLD TIME has been set with the output-hold setting, the analog output remains held (refer to Section 8.2, “Setting Output Hold,” later in this manual). Manual calibration is completed when the preset output-stabilization time elapses. This output-stabilization time is set to 10 minutes at the factory before shipment. If you press the [Enter] or [Return] key within the output-stabilization time, manual calibration is then completed.

8. Detailed Data Setting

8.1 Current Output Setting

This section describes setting of the analog output range.

8.1.1 Setting Minimum Current (4 mA) and Maximum Current (20 mA)

To set the minimum and maximum currents, proceed as follows:

(1) Select Setup in the Execution/Setup display.
(2) Select the mA-output setup in the Setup display.
(3) Select mA-output1 in the mA-output display.
(4) Select Min. oxygen conc. in the mA-output1 range display and press the [Enter] key. The numeric-data entry display then appears. Enter the oxygen concentration for the minimum current (4 mA); for example, enter “010” for 10% O_2.
(5) Select Max. oxygen conc. in the mA-output1 range display and enter the oxygen concentration for the maximum current (20 mA) in the same manner as in step 4 above.
(6) Set mA-output2 in the same way as the setting procedure for mA-output1 given above.

8.1.2 About Input Ranges

The minimum concentration of oxygen for the minimum current (4 mA) is 0% O_2 or 6% to 76% O_2. The maximum concentration of oxygen for the maximum current (20 mA) ranges from 5% to 100% O_2, and must be at least 1.3 times the concentration of oxygen set for the minimum. If it does not fall within this input range setting, the setting will be invalid, and the previous set values will remain.

Setting example 1
If the setting (for a 4 mA current) is 10% O_2, you must set the oxygen concentration for the maximum (20 mA) point at 13% O_2 or greater.

Setting example 2

If the setting (for a 4 mA current) is 75% O_2, you must set the oxygen concentration for the maximum (20 mA) point at more than 98% O_2 (75 × 1.3). (Numbers after the decimal point are rounded up.)

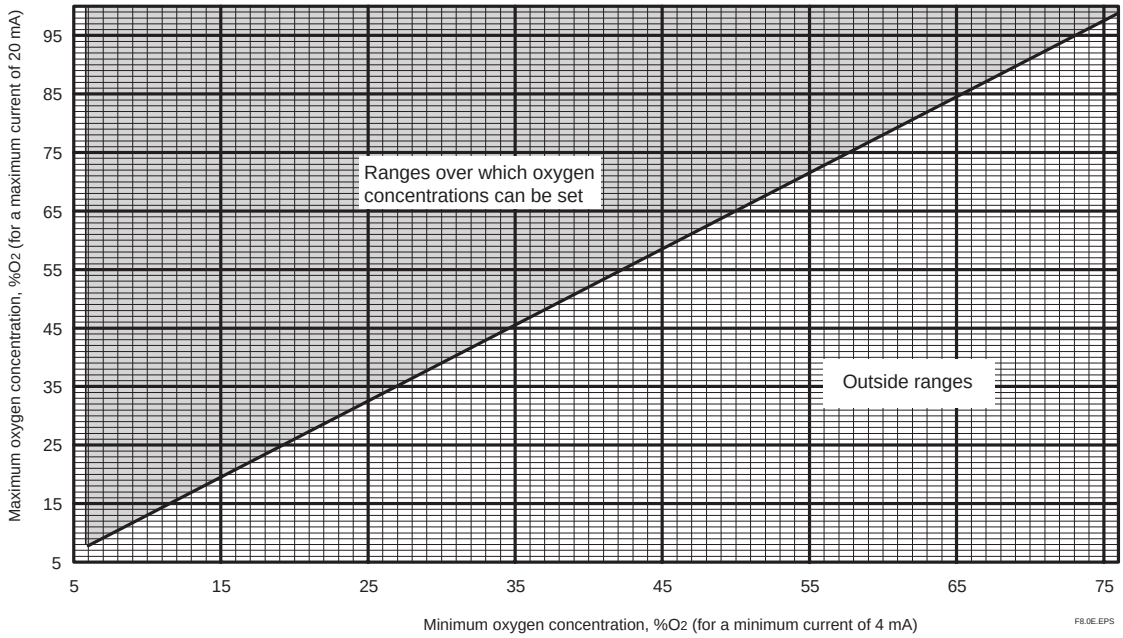

8.1.3 Entering Output Damping Constants

If a measured value which is adversely affected by rapid changes in the measurement-gas oxygen concentration is used as the basis for control, frequent on-off actions of the output may result. To avoid this, the converter allows the setting of output damping constants ranging from 0 to 255 seconds. Select the appropriate output damping constant from the numeric-data entry display. To set 30 seconds, enter 030.

8.1.4 Selection of Output Mode

You can select linear or logarithmic output mode. The former provides a linear relationship between the analog output signal and oxygen concentration. The latter provides logarithmic characteristic. Press the [Enter] key in the output mode display. A linear/logarithmic selection display then appears. Select the desired mode.

CAUTION

- When you select logarithmic mode, the minimum output remains constant at 0.1% O_2, and the minimum oxygen concentration value remains unchanged.

8.1.5 Default Values

When the analyzer is delivered or reset to defaults, the output current default settings by as shown in Table 8.1.1.

Table 8.1.1 Output Current Default Values

Item	Default setting
Min. oxygen concentration	0% O_2
Max. oxygen concentration	25% O_2
Output damping constant	0 (seconds)
Output mode	Linear

T8.1.1E.EPS

8.2 Output Hold Setting

The “output hold” functions hold an analog output signal at a preset value during the equipment’s warm-up time or calibration or if an error arises. Outputs 1 and 2 can be set individually. Table 8.1.2 shows the analog outputs that can be retained and the individual states.

Table 8.1.2

Equipment status / Output hold values available	During warm-up	Under maintenance	Under calibration During blow-back	On Error occurrence
4 mA	○			
20 mA	○			
Without hold feature		○	○	○
Retains output from just before occurrence		○	○	○
Set value (2.4 to 21.6 mA)	○	○	○	○

○: The output hold functions are available. T8.1.2E.EPS

8.2.1 Definition of Equipment Status

(1) During warm up

“During warm up” is the time required after applying power until the sensor temperature stabilizes at 750° C, and the equipment is in the measurement mode.

(2) Under maintenance

“Under maintenance” is the time, starting for pressing the Setup key in the basic panel display the Execution/Setup display, to go back to the basic panel display. The display panels under the Execution/Setup display, which are in Figure 7.3.1, are included.

(3) “Under calibration” (see Chapter 3, Calibration)

“Under calibration” is the time, during manual calibration, starting from entering the Manual calibration display (shown in Figure 8.1), and making a series of calibrations, until the Calibration End key is pressed or until the preset output stabilization time elapses.

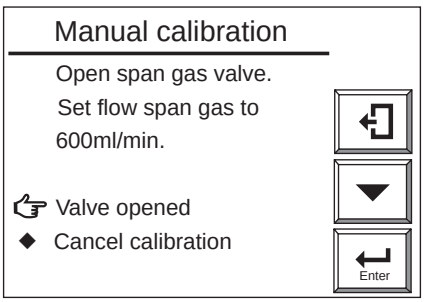

F8.1E.EPS

Figure 8.1

For semi-automatic calibration, “under calibration” is the time required from entering calibration instructions to perform a, either by using the touchpanel or by a contact input, calibration until the output stabilization time elapses.

For automatic calibration, “under calibration” is the time required, after performing an appropriate calibration until the output stabilization time elapses.

(4) During “Blow-back” (see Section 10.2, “Blow-back,” later in this manual)

During semi-automatic blow-back:
“During blow-back” is the time required after pressing the blow-back start key, by using the touchpanel or entering a blow-back start instruction by using a contact input, until the blow-back time and output stabilization time elapse.

During automatic blow-back:
“During blow-back” is the time required after reaching the blow-back start time until the blow-back time and output stabilization time elapse.

(5) On Error occurrence
This is the time at which any of Errors 1 to 4 occurs.

8.2.2 Preference Order of Output Hold Value

The output hold value takes the following preference order:

Preference order (high) ↑
- On error occurrence
- Under calibration or during blow-back
- During warm-up
- Under maintenance

8.2.2.siki

For example, if the output current is set to 4 mA during maintenance, and no output-hold output for during calibration is preset, the output is held at 4 mA during the maintenance display. However, the output hold is released at the time of starting the calibration, and the output will be again held at 4 mA after completing the calibration and when the output stabilization time elapses.

8.2.3 Output Hold Setting

To set the output hold, follow these steps:

(1) Press the Setup key in the basic panel display to display the Execution/Setup display. Then select Setup in the Execution/Setup display. Next, select the mA-output setup and then the mA-output preset display as shown in Figure 8.2.

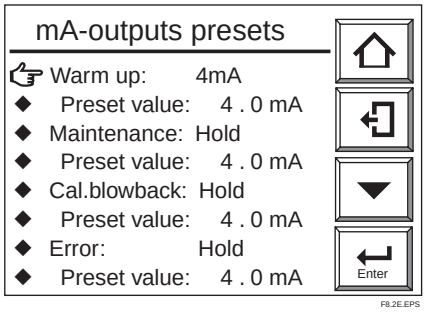

Figure 8.2 mA-output Preset Display

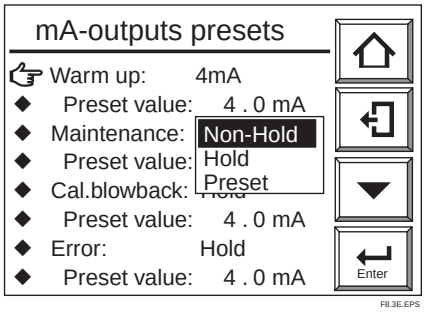

Figure 8.3

(2) From this display (Fig. 8.2), select the desired display. Figure 8.3 shows an example of selecting Maintenance. Select the desired output status.

(3) If a preset value is selected, set the corresponding output current. If you select a preset value just below Maintenance on the screen, the numeric-data entry display will appear. Enter the current value you want. To set 10 mA, type in 010 and press the [Enter] key to complete the setting. The setting range is from 2.4 to 21.6 mA.

8.2.4 Default Values

When the analyzer is delivered, or if data are initialized, output hold is the default as shown in Table 8.2.

Table 8.2 Output Hold Default Values

Status	Output hold (min. and max. values)
Under warm-up	4 mA
Under maintenance	Holds output at value just before maintenance started.
During calibration or during blow-back	Holds output at value just before starting calibration or "blow-back."
On Error occurrence Set value: all 4 mA	Holds output at value just before error occurrence.

T8.2E.EPS

8.3 Setting Oxygen Concentration Alarms

The analyzer enables the setting of four alarms — high-high, high, low, and low-low alarms — depending upon the oxygen concentration. The following section sets out the alarm operations and setting procedures.

8.3.1 Alarm Values

(1) High-high and high alarm values

If high-high and high alarm values are set to ON, then alarms occur if measured valves exceed the alarm set values. The oxygen alarm set values can be set in the range 0 to 100% O_2.

(2) Low and low-low alarm values

If low-low and low alarm values ore set, then alarms occur if measured values fall below the alarm set values. The oxygen alarm set values can be set in the range 0 to 100% O_2.

8.3.2 Alarm Output Actions

If the measured values of the oxygen concentration fluctuate between normal (steady-state) values and alarm setting, there may be a lot of alarm-output issuing and canceling. To avoid this, set the alarm delay and hysteresis for alarm canceling under the alarm output conditions, as Figure 8.4 shows. When the delay time is set, an alarm will not be issued so quickly even the measured value differs from the steady-state and enters the alarm setpoint range. If the measured value remains within the alarm setpoint range for a certain period of time (for the preset delay time), an alarm will result. On the other hand, there will be a simila delay each time the measured value returns to the steady state from the alarm setpoint range (canceling the alarm status). If hysteresis is set, alarms will be canceled when the measured value is less than or greater than the preset hysteresis values. If both the delay time and hysteresis are set, an alarm will be issued if the measured value is in the alarm setpoint range and the delay time has elapsed. When the alarm is reset (canceled), it is required that the measured value be beyond the preset hysteresis value and that the preset delay time has elapsed. Refer to Figure 8.4 for any further alarm output actions. The delayed time and hysteresis settings are common to all alarm points.

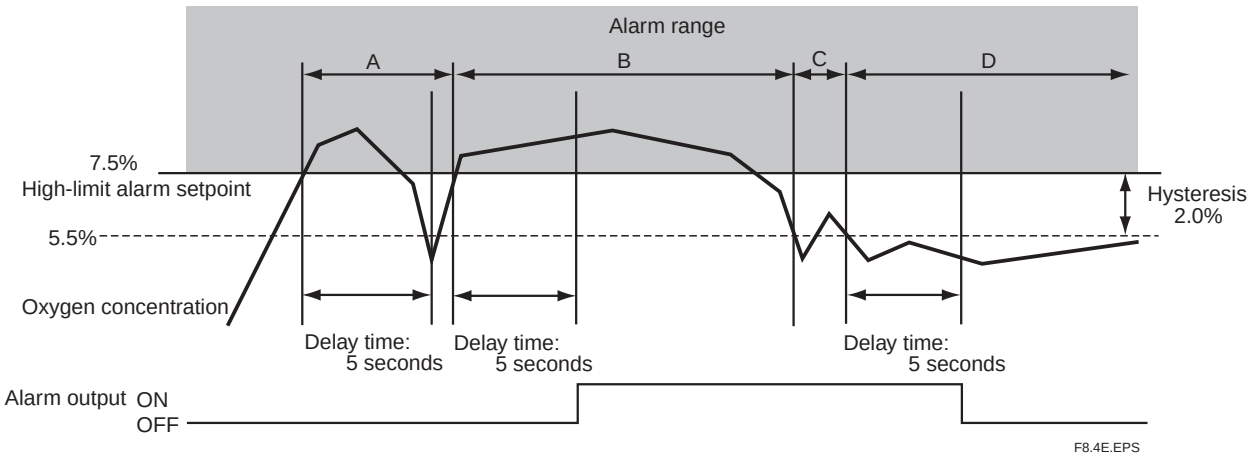

Figure 8.4 Alarm Output Action

In the example in Figure 8.4, the high-limit alarm point is set to 7.5% O_2, the delay time is set to five seconds, and hysteresis is set to 2% O_2.

Alarm output actions in this figure are as follows:

(1) In “A” Although oxygen concentration value exceed the high-limit alarm setpoint, it falls lower than the high-limit alarm setpoint before the preset delay time of five seconds elapses. So, no alarm is issued.
(2) In “B” Oxygen concentration value exceeds the high-limit alarm setpoint and the delay time elapses during that measurement. So, an alarm results.
(3) In “C” Although oxygen concentration value falls lower than the hysteresis set value, the value rises again and exceeds the hysteresis set value before the preset delay time elapses. So, the alarm is not canceled.
(4) In “D” Oxygen concentration value falls below the hysteresis set value and the preset delay time elapses, so the alarm is canceled.

8.3.3 Alarm Setting Procedure

To set the alarm setpoints, follow these steps:

(1) Press the Setup key in the basic panel display to display the Execution/Setup display.
(2) Select Setup in the Execution/Setup display. The “Commissioning” (Setup) display then appears.
(3) Select the Alarm setup in the “Commissioning” (Setup) display. The Alarms setup display shown in Figure 8.5 then appears.

• To set the hysteresis, proceed to the following steps.

(4) Select Hysteresis in the Alarm setup display. The numeric-data entry display then appears. Enter the desired hysteresis value as a percent of oxygen concentration. To set 2.5% O_2, enter “0025.” The hysteresis setting can be in the range 0 to 9.9% O_2.

• To set the delay time, proceed as per the following steps.

(5) Select the Contact delay in the Alarms setup display. The numeric-data entry display then appears. Enter the desired delay time, in seconds. To set three seconds, enter “003.” The delay time setting can be in the range 0 to 255 seconds.

• To set the alarm point, proceed to the following steps.

(6) Select the Setpoints in the Alarms setup display. The Oxygen alarms display then appears, as shown in Figure 8.6.
(7) When you select “High alarm” in the Oxygen alarms display, the “off” or “on” selection display then appears. If you select “on,” the High alarm will then be enabled (enable/disable).
(8) To set the High alarm values select “Set value” just below the High alarm. The numeric-data entry display then appears. Enter the alarm set value (percent of oxygen concentration). If you want to set the alarm value to 10% O_2, enter “010.”
(9) Set the other alarm settings in the same manner as in the steps above.

CAUTION

No alarm is issued when alarm is set to “off” (disabled). To use the alarm functions, be sure to set the alarms “on”.

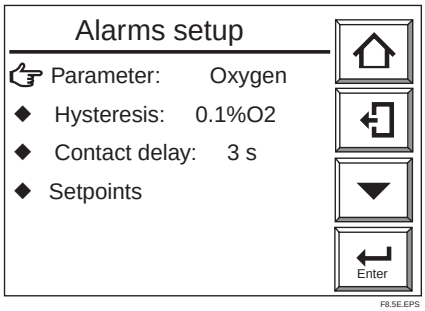

Figure 8.5 Alarms Setup Display

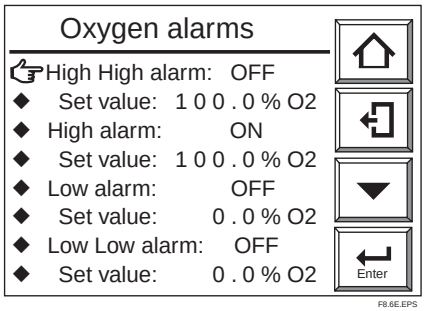

Figure 8.6 Oxygen Alarms Display

8.3.4 Default Values

When the analyzer is delivered, or if data are initialized, the default alarm set values are as shown in Table 8.3.

Table 8.3 Alarm Setting Default Values

Set item	Set value
Hysteresis	0.1% O_2
Delay time	30 seconds
High-high limit alarm	Off
High-high-limit alarm setpoint	100% O_2
High-limit alarm	Off
High- and low-limit alarm setpoints	100% O_2
Low-limit alarm	Off
Low-limit alarm setpoint	0% O_2
Low-low-limit alarm	Off
Low-low-limit alarm setpoint	0% O_2

T8.3E.EPS

8.4 Output Contact Setup

8.4.1 Output Contact

Mechanical relays provide contact outputs. Be sure to observe relay contact ratings. (For details, consult the specifications requirements.) The operation modes of each contact output are as follows. For output contacts 1 to 3 you can select open or closed contact when the contact is “operated”. Default is closed. For output contact 4, contact is closed. When power fails, contact outputs 1 to 3 are open, and 4 is closed.

Table 8.4

	State when contact “ operated ”	**When no power is applied to this equipment**
Output contact 1	Open (deenergized) or closed (energized) selectable.	Open
Output contact 2	Open (deenergized) or closed (energized) selectable.	Open
Output contact 3	Open (deenergized) or closed (energized) selectable.	Open
Output contact 4	Closed (deenergized) only	Closed

T8.4E.EPS

8.4.2 Setting Procedure

To set the output contact, follow these steps.

(1) Press the Setup key in the basic panel display to display the Execution/Setup display.
(2) Select Setup in the Execution/Setup display. The “Commissioning” (Setup) display then appears.
(3) Select the Contact setup in the “Commissioning” (Setup) display. The Contact setup display shown in Figure 8.7 then appears.
(4) Select the desired output contact. This section shows an example where contact output 1 is selected (see Figure 8.8).
(5) Each set item and the selected items are briefly described in Table 8.5. The following describes an example of setting where output contact 1 is closed during calibration.
(6) Select Others in the Output contact 1 display. The “Contact1” display shown in Figure 8.9 then appears. Select Calibration in the Contact1 display.
(7) The on or off selection display then appears. Select “on” herein.
(8) Press the Return key to go back to the previous display.
(9) Move the pointer to “During power-off the contact is open and in condition it is Open” and press the [Enter] key. The “off” or “on” selection display then appears. If you select “off,” this means “open” in normal conditions and “closed” when the contact output is on.

WARNING

- Output contact 4 remains closed when the output is on.
- Output contact 4 is linked to the detector’s heater power safety switch. As such, if output contact 4 is on, the heater power stops and error 1 or 2 results.
- To prevent this, set contact output 4 so that no problem will arise even though the heater power is turned off.

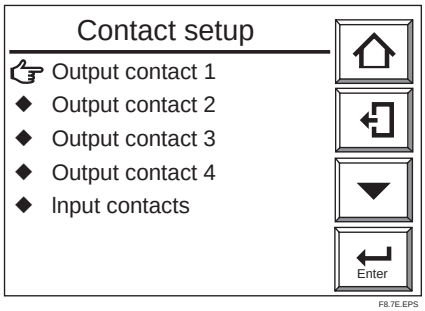

Figure 8.7 Contact Setup Display

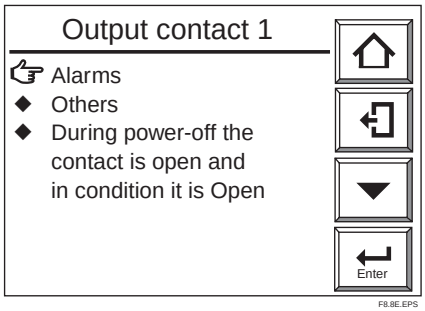

Figure 8.8 Output Contact 1 Display

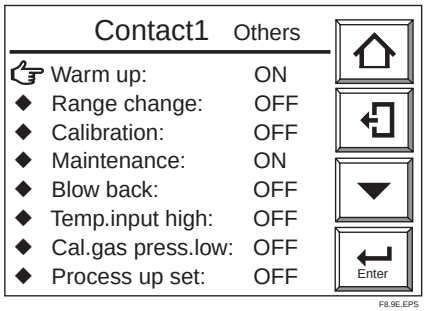

Figure 8.9 "Contact1 Others" Display

Table 8.5 Output Contact Settings

	Item to be selected	Brief description
Alarm and Error settings	High-high-limit alarm	If "high-high alarm ON" is selected, contact output occurs when the high-high-limit alarm is issued. To do this, it is required, in alarm setup, that the high-high alarm be set on beforehand (see Section 8.3).
	High-limit alarm	If "high alarm ON" is selected, contact output occurs when the high-limit alarm is provided. To do this, it is required, in alarm setup, that the high-limit alarm be set on beforehand (see Section 8.3).
	Low-limit alarm	If "low alarm ON" is selected, contact output occurs when the low-limit alarm is provided. To do this, it is required, in alarm setup, that the low-limit alarm be set on beforehand (see Section 8.3).
	Low-low-limit alarm	If "low-low alarm ON" is selected, contact occurs when the low-low-limit alarm is issued. To do this, it is required, in alarm setup, that the low-low alarm be set on beforehand (see Section 8.3).
	Error	If "Error ON" is selected, contact output occurs when an error results. (See Chapter 12, "Troubleshooting.")
Other settings	Warm-up	If "Warm-up ON" is selected, contact output occurs during warm-up. For the definition of warm-up, see Section 8.2.1.
	Output range change	If "Range Change ON" is selected, contact output occurs ("answer-back signal to a range change signal") while a range change signal is applied to a contact input. To do this, it is required, in input contact setup, that the range change be selected beforehand. For more on this, see Section 8.5.
	Calibration	If "Calibration ON" is selected, contact output occurs during calibration. For the definition of "During calibration," consult Section 8.2.1.
	Maintenance	If "Maintenance ON" is selected, contact output occurs during maintenance. For the definition of "During maintenance," consult Section 8.2.1.
	Blow-back	If "Blow-back ON" is selected, contact output occurs during blow-back. For the definition of "During blow-back," consult Section 8.2.1.
	High-limit temperature alarm	Not supported by the oxygen analyzer.
	Calibration-gas press. low	If "Cal. gas press. low ON" is selected, contact output occurs ("answer-back signal to a calibration-gas low-pressure signal")when a calibration-gas low-pressure signal is applied to the contact input. To do this, it is required, in input contact setup, that "Cal. gas press. Low" be selected beforehand. For more on this, see Section 8.5.
	Process upset	If "Process upset" is selected, contact output occurs ("answer-back signal to a process upset signal) when the process upset signal is applied to the contact input. To do this, it is required, in input contact setup, that "process upset" be selected beforehand (see Section 8.5).

T8.5E.EPS

Note: To provide an alarm with an output contact, be sure to make an alarm setting.
When using contact output as an answer-back signal for an input contact, be sure to make an input contact

8.4.3 Default Values

When the analyzer is delivered, or if data are initialized, alarm and other setting defaults are as shown in Table 8.6.

Table 8.6 Output Contact Default Settings

	Item	Output contact 1	Output contact 2	Output contact 3	Output contact 4
Alarm settings	High-high-limit alarm				
	High-limit alarm			○	
	Low-limit alarm			○	
	Low-low-limit alarm				
	Error				○
Other settings	Warm-up	○			
	Output range change				
	Calibration		○		
	Maintenance	○			
	Blow-back				
	High-limit temperature alarm				
	Calibration-gas press. low				
	Process upset				
	Operating contact status	Open (default)	Closed (default)	Closed (default)	Closed (fixed)

T8.6E.EPS

○: Present

Note: Blank boxes in the above table indicate that the default is disabled .

8.5 Input Contact Settings

8.5.1 Input Contact Functions

The converter input contacts execute set functions by accepting a remote dry-contact (“voltage-free contact”) signal. Table 8.7 shows the functions executed by a remote contact signal.

Table 8.7 Input Contact Functions

Item	Function
Calibration-gas pressure drop	While the contact signal is on, neither semi-automatic nor automatic calibration is possible.
Measuring range change	While contact input is On, range of Analog Output 1 is switched to 0-25% O_2 and "Range" is displayed on the screen. See Figure 8.10.
Calibration start	If the contact signal is applied, semi-automatic calibration starts (only if the semi-automatic or automatic mode has been setup). Calibration is started with an applied one- to 11-second time interval single-output contact signal. Even if a continuous contact signal is applied, a second calibration is not repeated. If you want to perform calibration, turn the contact signal off and then back on.
Process upset (Unburnt gas detection)	If the contact signal is on, heater power will be switched off. (A one- to 11-second time interval single-output signal is available as a contact signal.) If this operation starts, the sensor temperature decreases and an error occurs. To restore it to normal, turn the power off and then back on, or reset the analyzer.
Blow-back start	If the contact signal is on, blow-back starts. (A one- to 11-second time interval single-output signal is available as a contact signal.) Even if a continuous contact signal is applied, a calibration is not repeated. If you want to make a second calibration, turn the contact signal off and then back on. (Refer to Section 10.2, "Blow-back.")

T8.7E.EPS

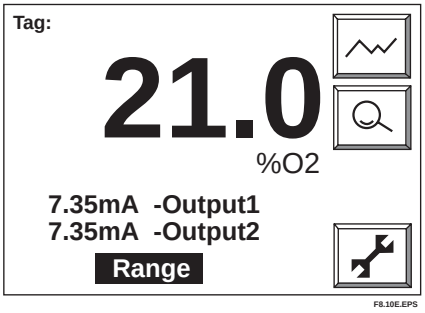

Figure 8.10 Changing Measuring Range with Input Contact

Note

1. Measurement range switching function by an external contact input is available for analog output1 only.
2. When making a semi-automatic calibration, be sure to set the semi-automatic or automatic mode using the Calibration setup display.
   When carrying out “blowback,” be sure to set “blowback” in the output contact setup.

8.5.2 Setting Procedure

The following are set so that semi-automatic calibration starts when input contact open is applied to “Input1.”

Proceed as follows:

(1) Press the Setup key in the Basic panel display to display the Execution/Setup display.
(2) Select Setup in the Execution/Setup display to display the “Commissioning” (Setup) display.
(3) Select “Contact setup” in the “Commissioning” (Setup) display.
(4) Select “Input contacts” in the Contact setup display. The Input contacts display then appears, as shown in Figure 8.11.
(5) Select Input1 in that display. The Input contacts display then appears, as shown in Figure 8.12.
(6) Select Calibration start.
(7) Select Input1 “closed.” An Open or Closed selection display then appears.
(8) Choose Open.

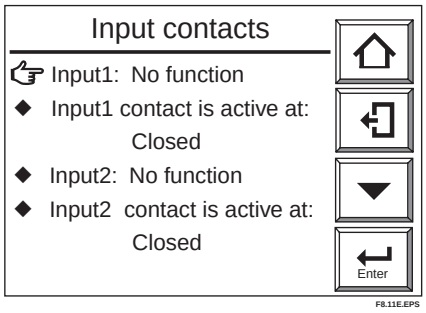

Figure 8.11 Input Contacts Display

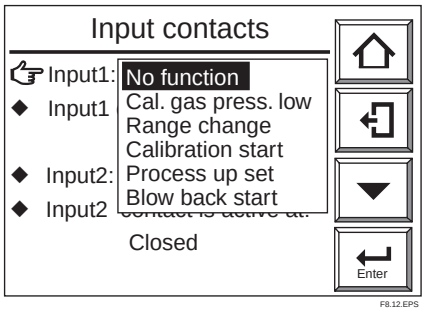

Figure 8.12 Input Contacts Display

8.5.3 Default Values

When the analyzer is delivered, or if data are initialized, contact input is diaable.

8.6 Other Settings

8.6.1 Setting the Date-and-Time

The following describe how to set the date-and-time. Automatic calibration or blowback works following this setting.

Proceed as follows:

(1) Press the Setup key in the Basic panel display to display the Execution/Setup display.
(2) Select Setup in the Execution/Setup display to display the “Commissioning” (Setup) display.
(3) Select Others in the “Commissioning” (Setup) display. The Others display then appears, as shown in Figure 8.14.
(4) Select Clock. The Clock display then appears, as shown in Figure 8.14.
(5) Select Set date to display the numeric-data entry display. To set the date June 21, 2000, enter 2106000 and press the [Enter] key. The display then returns to the one shown in Figure 8.14.
(5) Select Set time. Enter the time on a 24-hour basis. To enter 2:30 p.m., type in 1430 in the numeric-data entry display. Press the [Enter] key, and the time starts at 00 second.

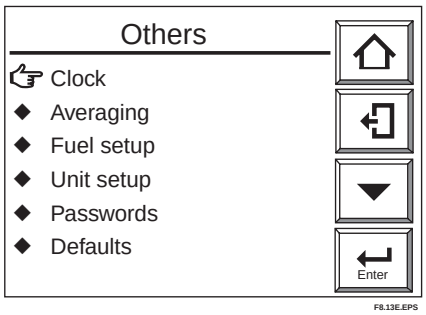

Figure 8.13 Other Settings

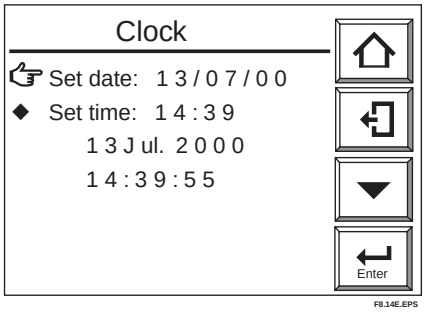

Figure 8.14 Clock Display

8.6.2 Setting Periods over which Average Values Are Calculated and Periods over which Maximum and Minimum Values Are Monitored

The equipment enables the display of oxygen concentration average values and maximum and minimum values under measurement (see Section 10.1.1, later in this manual). The following section describes how to set the periods over which oxygen concentration average values are calculated and maximum and minimum values are monitored.

8.6.2.1 Procedure

(1) Press the Setup key in the Basic panel display to display the Execution/Setup display.
(2) Select Setup in the Execution/Setup display to display the Commissioning” (Setup) display.
(3) Select Others in that display and then select Averaging in the Others display. The averaging display shown in Figure 8.15 then appears.
(4) Choose “Set period over which average is calculated” and enter the desired numeric value from the numeric-data entry display. To enter three hours, type in 003. The period over which average values can be calculated ranges from 1 to 255 hours.
(5) Choose “Set period over which maximum and minimum is stored” and enter the desired numeric value from the numeric-data entry display. To enter 48 hours, type in 048. The allowable input ranges from 1 to 255 hours.

8.6.2.2 Default Values

When the analyzer is delivered, or if data are initialized, the average-value calculation periods and maximum- and minimum-value monitoring periods are by default one hour and 24 hours respectively.

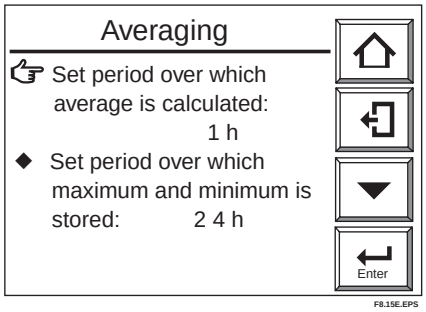

Figure 8.15 Setting Average-Value Calculation Periods and Maximum- and Minimum-Value Monitoring Periods

8.6.3 Setting Fuels

8.6.3.1 Input Parameters

The analyzer calculates the moisture content contained in exhaust gases. The following sets forth the fuel parameters necessary for calculation and their entries. The moisture quantity may be mathematically expressed by:

$$\text{Moisture quantity} = \frac{\overbrace{\text{(water vapor caused by combustion and water vapor contained in the exhaust gas)} + \text{(water vapor contained in air for combustion)}}}{\text{actual exhaust gas(including water vapor) per fuel}} \times 100 \quad \text{..... Equation 1}$$

$$= (Gw + Gw1)/G \times 100$$

$$= \frac{Gw + (1.61 \times Z \times m \times Ao)}{Go + Gw\,[(m - 1)\,Ao + (1.61 \times Z \times m \times Ao)]} \times 100 \quad \text{..... Equation 2}$$

$$\fallingdotseq \{\boxed{Gw} + (1.61 \times \boxed{Z} \times m \times \boxed{Ao}\} \;/\; \{\boxed{X} + \boxed{Ao} \times m\} \times 100$$

where,

$\boxed{Ao}$: Theoretical amount of air per unit quantity of fuel, m^3 /kg (or m^3) ... (2) in Table 8.8

G: Actual amount of exhaust gas (including water vapor) per unit quantity of fuel, m^3/kg (or m^3)

$\boxed{Gw}$: Water vapor contained in exhaust gas per unit quantity of fuel (by hydrogen and moisture content in fuel), m^3 /kg (or m^3) .....(1) in Table 8.8

Gw1: Water vapor contained in exhaust gas per unit quantity of fuel (moisture content in air), m^3 /kg (or m^3)

Go: Theoretical amount of dry exhaust gas per unit quantity of fuel, m^3 /kg (or m^3)

m: Air ratio

$\boxed{X}$: Constant determined depending on low calorific power of fuel ..... (3) in Table 8.8

$\boxed{Z}$: Absolute humidity of the atmosphere ..... Figure 8.17

Fill in the boxes with fuel parameters in Equation 2 above to calculate the moisture content. Use A0, Gw and X shown in Table 8.8. If there are no appropriate fuel data in Table 8.8, use the following equations for calculation. Find the value of “Z” in Equations 1 and 2 using Japanese Standard JIS B 8222. If a precise measurement is not required, obtain the value of “Z” using a graph for the absolute humidity indicated by a dry and wet bulb hygrometer.

- For liquid fuel

Amount of water vapor in exhaust gas (Gw) = (1/100) {1.24 (9h + w)} [m^3/kg]

Theoretical amount of air (Ao) = {(12.38 / 10000) x H1} — 1.36 [m^3 /kg]

Low calorific power = H1

X value = {(3.37 / 10000) x Hx} — 2.55 [m^3 /kg]

where, H1: low calorific power of fuel

h: Hydrogen in fuel (weight percentage)

w: Moisture content in fuel (weight percentage)

Hx: Same as numeric value of H1

- For gaseous fuel

Amount of water vapor in exhaust gas = (1/100) {(h2) + 1/2 Σy (Cy hy) + w} [m^3 /m^3]

Theoretical amount of air = 11.2 x (H1/10000) [m^3/m^3]

Low calorific power = H1

X value = (1.05 / 10000) x Hx [m^3 /m^3]

where, H1: low calorific power of fuel

h: Hydrogen in fuel (weight percentage)

w: Moisture content in fuel (weight percentage)

Hx: Same as numeric value of H1

- For solid fuel

Amount of water vapor in exhaust gas (Gw) = (1/100) {1.24 (9h + w)} [m^3/kg]

Theoretical amount of air = {(1.01 x (H1 / 1000)} + 0.56 [m^3/kg]

Low calorific power = H1 = Hh — 5.9 (9h + w) [kJ/kg]

X value = 1.11 - (0.106 / 1000) x Hx [m^3/m^3]

where, w: Total moisture content in use (weight percentage)

h: Hydrogen content (weight percentage)

The average hydrogen content of coal mined in Japan, which is a dry ash-free type, is 5.7 percent. Accordingly, "h" may be expressed mathematically by:

h = 5.7 [{100 — (w + a)} / 100] x (100 — w) / (100 — w1)

where, a: Ash content [%]

w1: Moisture content [%], analyzed on a constant humidity basis

Hh: Higher calorific power of fuel [kJ/kg]

H1: Low calorific power of fuel [kJ/kg]

Hx: Same numeric value of H1

Figure 8.17 Calculation Formula

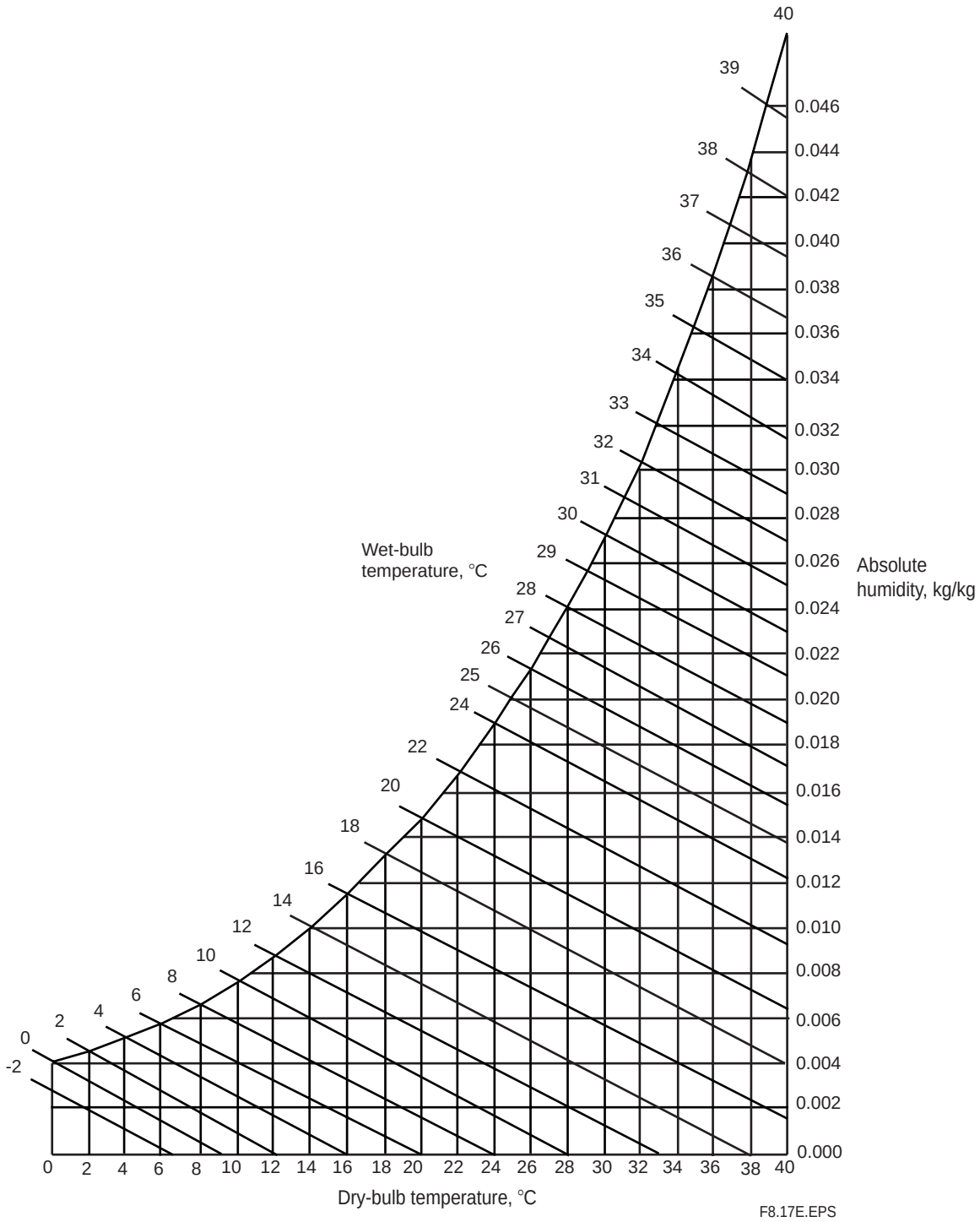

Figure 8.17 Absolute Humidity of Air

Table 8.8 Fuel Data

● **For liquid fuel**

Type \ Fuel properties			Specific weight kg/l	Chemical component (weight percentage)							Calorific power kJ/kg		Theoretical amount of air for combustion Nm^3/kg	Amount of combustion gas Nm^3/kg					X value
				C	h	O	N	S	w	Ash content	Higher order	Lower order		CO_2	H_2O	SO_2	N_2	Total	
Kerosene			0.78~0.83	85.7	14.0	—	—	0.5	0.0	0.0	46465	43535	11.4	1.59	1.56	0.00	9.02	12.17	0.96
Light oil			0.81~0.84	85.6	13.2	—	—	1.2	0.0	0.0	45879	43032	11.2	1.59	1.47	0.00	8.87	11.93	0.91
A	Heavy oil class 1	No.1	0.85~0.88	85.9	12.0	0.7	0.5	0.5	0.3	0.05	45544	42739	10.9	1.60	1.34	0.00	8.61	11.55	0.89
		No.2	0.83~0.89	84.6	11.8	0.7	0.5	2.0	0.4	0.05	45125	42320	10.8	1.58	1.32	0.01	8.53	11.44	0.86
B	Heavy oil class 2		0.90~0.93	84.5	11.3	0.4	0.4	3.0	0.5	0.05	43827	41274	10.7	1.58	1.27	0.02	8.44	11.31	0.77
C	Heavy oil class 2	No.1	0.93~0.95	86.1	10.9	0.5	0.4	1.5	0.5	0.1	43952	41441	10.7	1.61	1.22	0.01	8.43	11.27	0.79
		No.2	0.94~0.96	84.4	10.7	0.5	0.4	3.5	0.5	0.1	43116	40646	10.5	1.58	1.20	0.02	8.32	11.12	0.72
		No.3	0.92~1.00	86.1	10.9	0.5	0.4	1.5	0.6	0.1	43660	41190	10.7	1.61	1.22	0.01	8.43	11.27	0.77
		No.4	0.94~0.97	83.0	10.5	0.5	0.4	3.5	2.0	0.1	43032	40604	10.3	1.55	1.18	0.02	8.18	10.93	0.72
													②		①				③

● **Gas fuel**

Theoretical amount of air

Type \ Fuel properties	Specific weight kg/Nm^3	Chemical component (weight percentage)							Calorific power kJ/Nm^3		Theoretical amount of air for combustion Nm^3/m^3	Combustion product, Nm^3/m^3					X value
		CO	H_2	CO_2	CH_4	C_mH_n	O_2	N_2	Higher order	Lower order		CO_2	H_2O		N_2		
Coke oven gas	0.544	9.0	50.5	2.6	25.9	3.9	0.1	8.0	20428	18209	4.455	0.45	1.10		3.60	5.15	0.46
Blast furnace gas	1.369	25.0	2.0	20.0	—	—	—	53.0	3391	3349	0.603	0.45	0.02		1.01	1.48	0.08
Natural gas	0.796	—	—	2.0	88.4	3.2	1.6	4.2	37883	34074	9.015	0.98	1.88		7.17	10.03	0.86
Propane	2.030	C_3H_8 90%, C_4H_{10} 10%							102055	93976	24.63	3.10	4.10		19.5	26.7	2.36
Butane	2.530	C_3H_8 10%, C_4H_{10} 90%							125496	115868	30.37	3.90	4.90		24.0	32.8	2.91
(Gases)		(Molecular Formula)															
Oxygen	1.43	O_2							—	—	—	—	—		—	—	—
Nitrogen	1.25	N_2							—	—	—	—	—		—	—	—
Hydrogen	0.09	H_2							12767	10758	2.390	—	1.0		1.89	2.89	0.27
Carbon monoxide	1.25	CO							12642	12642	2.390	1.0	—		1.89	2.89	0.32
Carbon dioxide	1.96	CO_2							—	—	—	—	—		—	—	—
Methane	0.72	CH_4							39750	35820	9.570	1.0	2.0		7.57	10.6	0.90
Ethane	1.34	C_2H_6							69638	63744	16.74	2.0	3.0		13.2	18.2	1.60
Ethylene	1.25	C_2H_4							62991	59060	14.35	2.0	2.0		11.4	15.4	1.48
Propane	1.97	C_3H_8							99070	91255	23.91	3.0	4.0		18.9	25.9	2.29
Butane	2.59	C_4H_{10}							128452	118623	31.09	4.0	5.0		24.6	33.6	2.98
											②		①				③

T8.8E.EPS

8.6.3.2 Procedure

To make a fuel setting, follow these steps:

(1) Press the Setup key in the basic panel display to display the Execution/Setup display.
(2) Select Setup in the Execution/Setup display. The “Commissioning” (Setup) display then appears.
(3) Select Others in that display and then the Fuel setup shown in Figure 8.18.
(4) Choose the Theoretical air quantity and the Content of moisture in the exhaust gas in turn. The numeric-data entry display then appears. Enter numeric data using the numeric keys.
(5) Choose “more” in the Fuel setup display. The Fuel setup shown in Figure 8.19 then appears.
(6) Set the numeric data to the “Value of the X coefficient” and then to the “Absolute humidity of the atmosphere.”
(7) Choose “finished” to return to the display shown in Figure 8.9.

8.6.3.3 Default Values

When the analyzer is delivered, or if data are initialized, default, parameter settings are as shown in Table 8.9.

Table 8.9 Default Settings for Fuel Values

Item	Default setting
Amount of water vapor in exhaust gas	1.00 m^3/kg (m^3)
Theoretical amount of air	1.00 m^3/kg (m^3)
X value	1.00
Absolute humidity of the atmosphere	0.1000 kg/kg

T8.9E.ESP

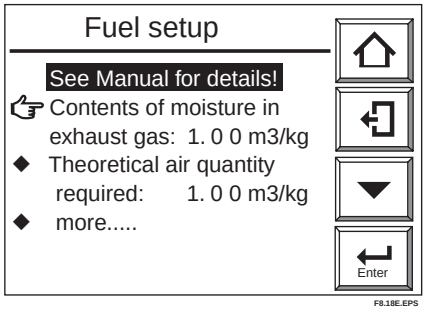

Figure 8.18 Fuel Setup

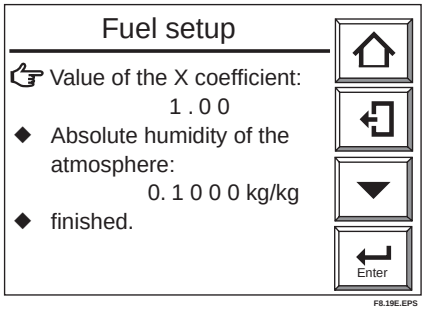

Figure 8.19 Fuel Setup

8.6.4 Setting Passwords

The converter enables password settings to prevent unauthorized switching from the Execution/Setup menu lower level menu displays. Set passwords for calibration, blowback and maintenance use and for setup use individually.

Proceed as follows:

(1) Press the Setup key in the basic panel display to display the Execution/Setup display.
(2) Choose Setup to display the “Commissioning” (Setup) display.
(3) Choose Others and then Passwords to display the Passwords display shown in Figure 8.20.
(4) Choose “Calibration, Blowback and Maintenance” to set passwords for calibration, blowback and maintenance respectively.
(5) The “text entry” display then appears. Enter up to eight alphanumeric characters as the password.
(6) In the same manner, follow steps 1 through 5 above to set a password for setup.
(7) Record passwords to manage them appropriately.

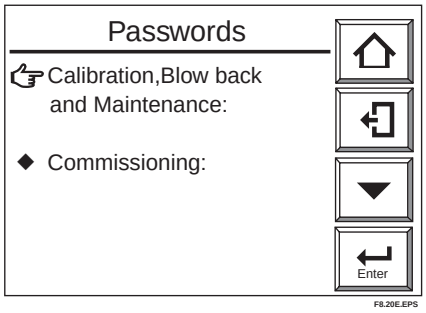

Figure 8.20 Passwords Display

If you forget a password, select Setup in the Execution/Setup display, and enter “MOON.” By doing so, you can enter the Setup display only. Then display the Passwords and verify the set passwords.

9. Calibration

9.1 Calibration Briefs

9.1.1 Principle of Measurement

This section sets forth the principles of measurement with a zirconia oxygen analyzer before detailing calibration.

A solid electrolyte such as zirconia allows the conductivity of oxygen ions at high temperatures. Therefore, when a zirconia-plated element with platinum electrodes on both sides is heated up in contact with gases having different partial-oxygen pressures on each side, the element shows the action of the concentration cell. In other words, the electrode in contact with a gas with a higher partial-oxygen pressure acts as a negative electrode. As the gas comes in contact with the zirconia element in this negative electrode, oxygen molecules in the gas acquire electrons and become ions. Moving in the zirconia element, they eventually arrive at the positive electrode on the opposite side. There, the electrons are released and the ions return to the oxygen molecules. This reaction is indicated as follows:

Negative electrode: $O_2 + 4e \rightarrow 2\,O^{2-}$

Positive electrode: $2\,O^{2-} \rightarrow O_2 + 4\,e$

The electromotive force E (mV) between the two electrodes, generated by the reaction, is governed by Nernst's equation as follows:

E = -RT/nF ln PX/PA.....Equation (1)

where,

R: Gas constant

T: Absolute temperature

n: 4

F: Faraday's constant

Px: Oxygen concentration in a gas in contact with the negative zirconia electrode (%)

Pa: Oxygen concentration in a gas in contact with the positive zirconia electrode (%)

Assuming the zirconia element is heated up to 750° C, then we obtain equation (1) above.

$$E = -50.74 \log \frac{Px}{Pa} \quad \text{..... Equation (2)}$$

With this analyzer, the sensor (zirconia element) is heated up to 750° C, so Equation (2) is valid. At that point, the relationship as in Figure 9.1 is effected between the oxygen concentration of the measurement gas in contact with the positive electrode and the electromotive force of the sensor (= cell), where a comparison gas of air is used on the negative electrode side.

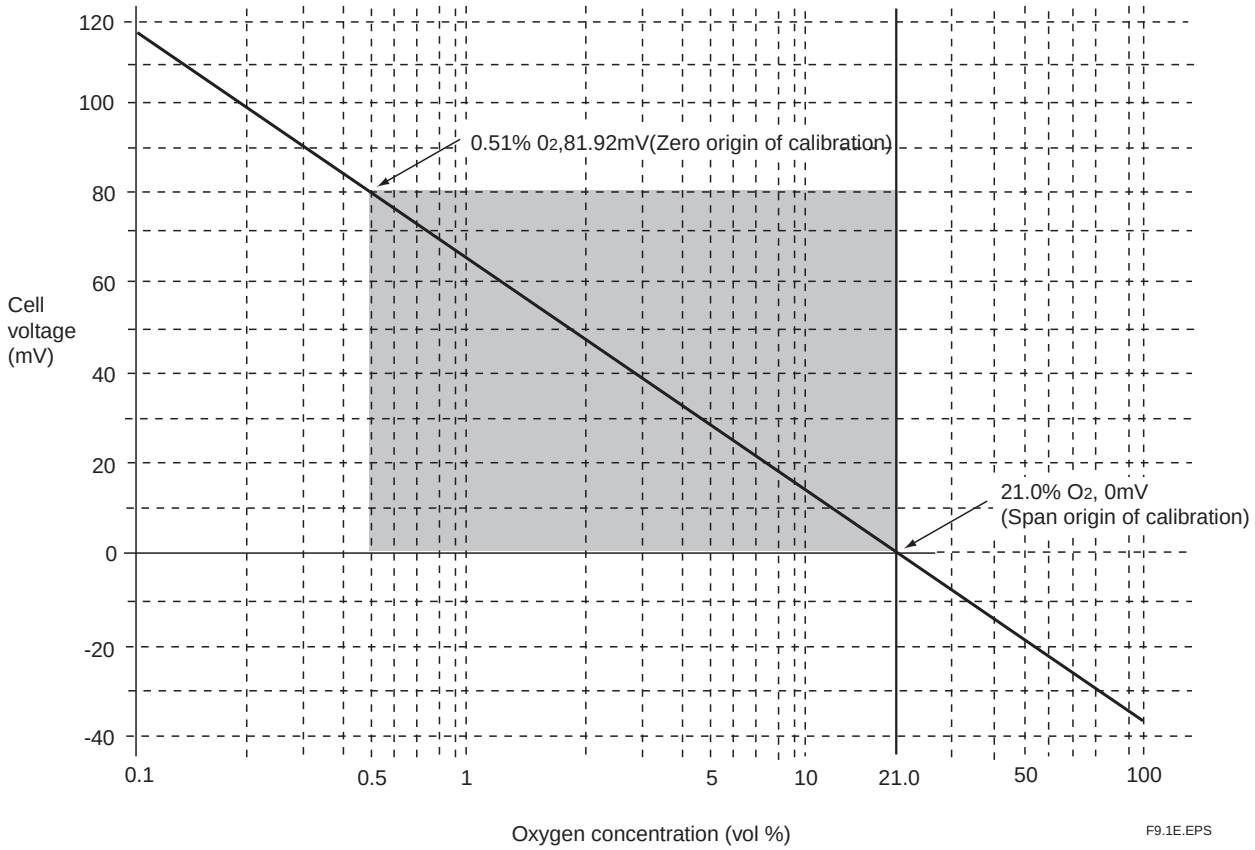

Figure 9.1 Oxygen concentration in a Measurement Gas vs Cell Voltage (21% O_2 Equivalent)

The measurement principles of a zirconia oxygen analyzer have been described above. However, the relationship between oxygen concentration and the electromotive force of a cell is only theoretical. Usually, in practice, a sensor shows a slight deviation from the theoretical value. This is the reason why calibration is necessary. To meet this requirement, an analyzer calibration is conducted so that a calibration curve is obtained, which corrects the deviation from the theoretical cell electromotive force.

9.1.2 Calibration Gas

A gas with a known oxygen concentration is used for calibration. Normal calibration is performed using two different gases: a zero gas of low oxygen concentration and a span gas of high oxygen concentration. In some cases, only one of the gases needs to be used for calibration. However, even if only one of the gases is normally used, calibration using both gases should be done at least once.

The zero gas normally used has an oxygen concentration of 0.95 to 1.0 percent oxygen by volume with a balance of nitrogen gas (N_2). The span gas widely used is clean air (at a dew-point temperature below -20° C and free of oily mist or dust, as in instrument air).

For best accuracy, as the span gas use oxygen whose concentration is near the top of the measurement range, in a nitrogen mixture.

9.1.3 Compensation

The deviation of a measured value from the theoretical cell electromotive force is checked by the method in Figure 9.2 or 9.3.

Figure 9.2 shows a two-point calibration using two gases: zero and span. Cell electromotive forces for a span gas with an oxygen concentration p1 and a zero gas with an oxygen concentration p2 are measured while determining the calibration curve passing between these two points. The oxygen concentration of the measurement gas is determined from this calibration curve. In addition, the calibration curve corrected by calibration is compared with the theoretical calibration curve for determining the zero-point correction ratio represented by B/A × 100 (percent) on the basis of A, B and C shown in Figure 9.2 and a span correction ratio of C/A × 100 (percent). If the zero-point correction ratio exceeds the range of 100 ± 30 percent or the span correction ratio becomes larger than 0 ± 18 percent, calibration of the sensor becomes impossible.

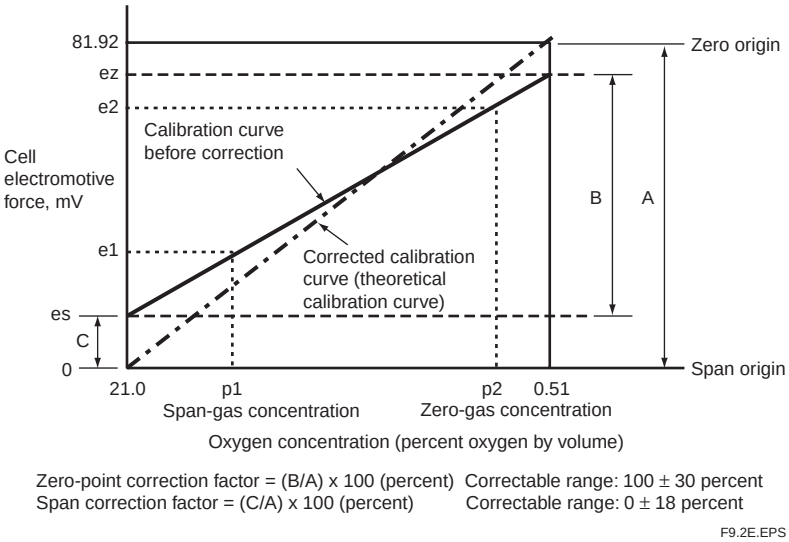

Figure 9.2 Calculation of a Two-point Calibration Curve and Correction Factors using Zero and Span Gases

Figure 9.3 shows a one-point calibration using only a span gas. In this case, only the cell electromotive force for a span gas with oxygen concentration p1 is measured. The cell electromotive force for the zero gas is carried over from a previous measurement to obtain the calibration curve. The principle of calibration using only a span gas also applies to the one-point calibration method using a zero gas only.

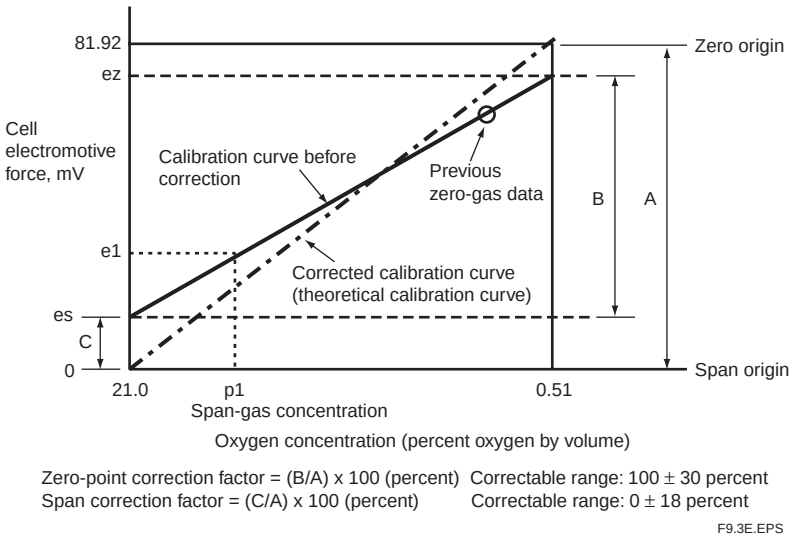

Figure 9.3 Calculation of a One-point Calibration Curve and Correction Factors using a Span Gas

9.1.4 Characteristic Data from a Sensor Measured During Calibration

During calibration, calibration data and sensor status data (listed below) are acquired. However, if the calibration is not properly conducted (an error occurs in automatic or semi-automatic calibration), these data are not collected in the current calibration.

These data can be observed by selecting the detailed data display key from the basic panel display. For an explanation and the operating procedures of individual data, consult Section 10.1.1, “Detailed Display.”

(1) Record of span correction factor
Recorded the past ten span correction factors.

(2) Record of zero correction factors
Recorded the past ten zero correction factors.

(3) Response time
You can monitor the response time provided that a two-point calibration has been done in semi-automatic or automatic calibration.

(4) Cell’s internal resistance
The cell’s internal resistance gradually increases as the cell (sensor) deteriorates. You can monitor the values measured during the latest calibration. However, these values include the cell’s internal resistance and other wiring connection resistance. So, the cell’s degrading cannot be estimated from these values only.

When only a span calibration has been made, these values will not be measured, and previously measured values will remain.

(5) Robustness of a cell
The robustness of a cell is an index for predicting the remaining life of a sensor and is expressed in a number on four levels.

9.2 Calibration Procedures

CAUTION

Calibration should be made under normal operating conditions (if the probe is connected to a furnace, the analyzer will undergo calibration under the operating conditions of the furnace). To make a precise calibration, conduct both zero-point and span calibrations.

9.2.1 Calibration Setting

The following sets forth the required calibration settings:

9.2.1.1 Mode

There are three calibration modes available:

(1) Manual calibration which allows zero and span calibrations or either one manually in turn;
(2) Semi-automatic calibration which lets calibration start with the touchpanel or a contact input, and undergoes a series of calibration operations following preset calibration periods and stabilization time; and
(3) Automatic calibration which is carried out automatically following preset calibration periods.

Calibrations are limited by the following mode selection:

• When manual calibration is selected:
Manual calibration only can be conducted. (This mode does not allow semi-automatic calibration with a contact input nor automatic calibration even when its start-up time has reached.)

• When semi-automatic calibration is selected:
This mode enables manual and semi-automatic calibrations to be conducted. (The mode, however, does not allow automatic calibration even when its start-up time has reached.)

• When automatic calibration is selected:
This calibration can be conducted in any mode.

To execute this calibration, follow these steps:

(1) Select the Setup key from the basic panel display to display the Execution/Setup display. Then select Maintenance from the Execution/Setup display.
(2) Select Calibration setup from the Maintenance display. Then select Mode from the Calibration setup display (see Figure 9.4).
Now you can select manual, semi-automatic, or automatic calibration.

9.2.1.2 Calibration Procedure

Select both span and zero calibrations or span calibration only or zero calibration only. Usually select span and zero calibrations.

Select Points from the Calibration setup display and then you can select “Both,” “Span” or “Zero” (see Figure 9.5 below).

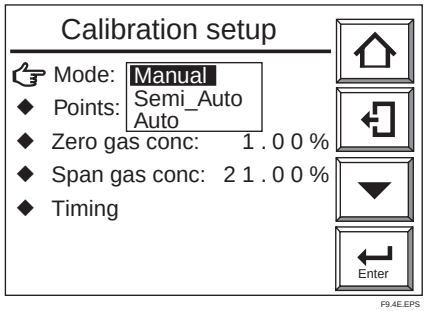

Figure 9.4 Calibration Setup

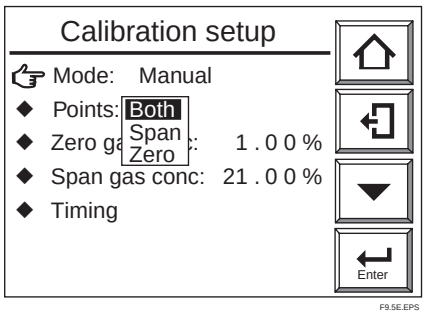

Figure 9.5 Calibration Setup

9.2.1.3 Zero-gas Concentration

Set the oxygen concentration for zero-point calibration. Enter the oxygen concentration for the zero gas in the cylinder used in the following procedures:

Select Zero gas conc. from the Calibration setup display. The numeric-data entry display then appears. Enter the desired oxygen concentration for the zero-point calibration. (The zero-gas set ranges from 0.3 to 100 percent oxygen.)

Enter 00098 for an oxygen concentration of 0.98 percent oxygen by volume.

9.2.1.4 Span-gas Concentration

Set the oxygen concentration for span calibration. If instrument air is used as the span gas, enter 21 percent oxygen.

Select Span gas conc. from the Calibration setup display. Enter the desired span-gas oxygen concentration from the numeric-data entry display.

(The span-gas set ranges from 4.5 to 100 percent oxygen.)

Enter 02100 for an oxygen concentration of 21 percent oxygen by volume.

Instrument air is here defined as dry air with a dew-point temperature of no higher than -20° C. If the dew-point temperature is higher than -20° C, use a hand-held oxygen analyzer to measure the actual oxygen concentration.

When using the ZO21S Standard Gas Unit (for use of the atmospheric air as a span gas), use a hand-held oxygen analyzer to measure the actual oxygen concentration, and then enter it.

CAUTION

(1) When instrument air is used for the span calibration, remove the moisture from the instrument air at a dew-point temperature of -20° C and also remove any oily mist and dust from that air.

(2) If dehumidifying is not enough, or if foul air is used, the measurement accuracy will be adversely affected.

9.2.1.5 Setting Calibration Time

• When the calibration mode is in manual:

First set the output stabilization time. This indicates the time required from the end of calibration to entering a measurement again. This time, after calibration, the measurement gas enters the sensor to set the time until the output returns to normal. The output remains held after completing the calibration operation until the output stabilization time elapses. The calibration time set ranges from 00 minutes, 00 seconds to 60 minutes, 59 seconds. For more details, consult Section 8.1,"Setting Output Hold." When the calibration mode is in semi-automatic, set the output stabilization time and calibration time. The calibration time is the time required from starting the flow of the calibration gas to reading out the measured value. The set calibration time is effective in conducting both zero and span calibrations. The calibration-time set ranges from 00 minutes, 00 seconds to 60 minutes, 59 seconds. Figure 9.6 shows the relationship between the calibration time and output stabilization time.

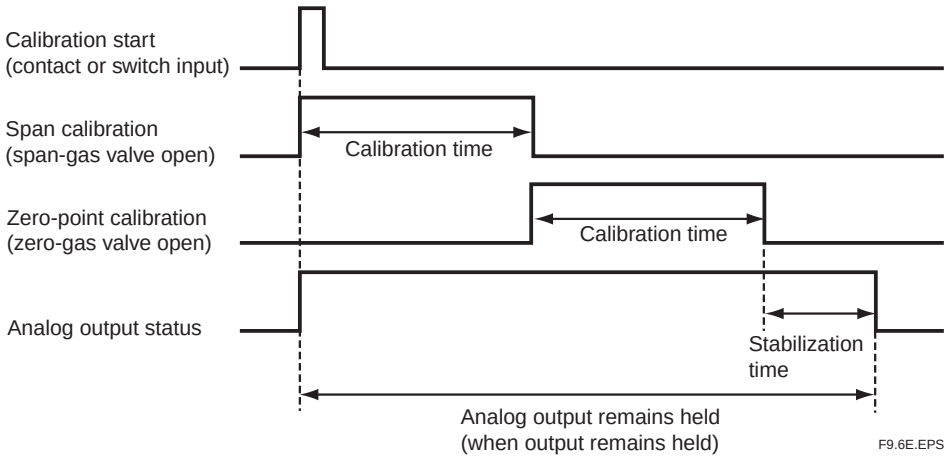

Figure 9.6 Calibration and Output-stabilization Time Settings

• When the calibration mode is in automatic:

In addition to the above output stabilization time and calibration time, set the interval, start date, and start time.

Interval means the calibration intervals ranging from 000 days, 00 hours to 255 days, 23 hours.

Set the first calibration day and the start-calibration time to the start date and start time respectively. For example, to start the first calibration at 1:30 p.m. on March 25, 2001, enter 25/03/01 to the start date and 13 hours, 30 minutes to the start time, following the steps below:

(1) Select the “Calibration timing” display. A panel display as shown in Figure 9.7 appears.
(2) Select each item for the calibration to display the numeric-data entry display. Enter the desired numeric values for the calibration.

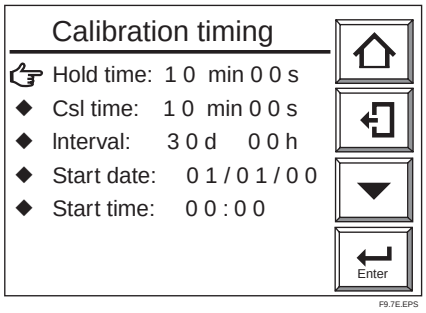

Figure 9.7 “Calibration Timing” Display

When setting calibration timing requirements, bear the following precautions in mind:

(1) If the calibration interval is shorter than the sum of stabilization time plus calibration time, the second calibration start time will conflict with the first calibration. In such a case, the second calibration will not be conducted. (When both zero and span calibrations are to be performed, the calibration time is double that required for a single (zero or span) calibration.)
(2) For the same reason, if the calibration start time conflicts with manual calibration or semi-automatic calibration, the current calibration will not be conducted.
(3) If the calibration time conflicts with maintenance service or blowback operations, calibration will start after completing the maintenance service or blowback operations (see Section 8.2.1, earlier in this manual).
(4) If 000 days, 00 hours are set for the calibration intervals, only the first calibration will be conducted; a second or later calibration will not be conducted.
(5) If a past date is set to the calibration start day, no calibration will be conducted.

9.2.2 Default Values

When the analyzer is delivered, or if data are initialized, the calibration settings are by default, as shown in Table 9.1.

Table 9.1 Default Settings for Calibration

Item		Default Setting
Manual Calibration	Calibration mode	Manual
	Calibration procedure	Span - zero
	Zero-gas (oxygen) concentration	1.00%
	Span-gas (oxygen) concentration	21.00%
Semi-automatic Calibration	Output hold (stabilization) time	10 minutes, 00 seconds
	Calibration time	10 minutes, 00 seconds
Automatic Calibration	Calibration interval	30 days, 00 hours
	Start day	01 / 01 / 00
	Start time	00:00

T9.1E.EPS

9.2.3 Calibration

9.2.3.1 Manual Calibration

For manual calibration, consult Section 7.12, “Calibration,” earlier in this manual.

9.2.3.2 Semi-automatic Calibration

To start calibration, follow these steps:

(1) Press the Setup key in the basic panel display to display the Execution/Setup display. Then select Calibration from the Execution/Setup display. The Calibration display shown in Figure 9.8 appears.
(2) Select Semi-auto calibration to display the Semi-automatic calibration display shown in Figure 9.9.
(3) Select Start calibration. The display shown in Figure 9.10 appears, and then start calibration.

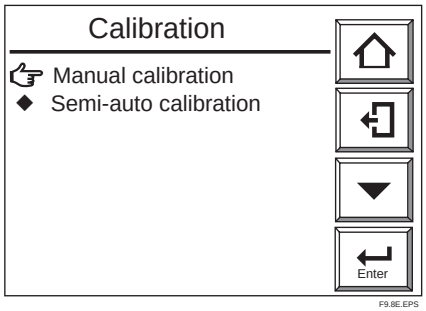

Figure 9.8 Calibration Display

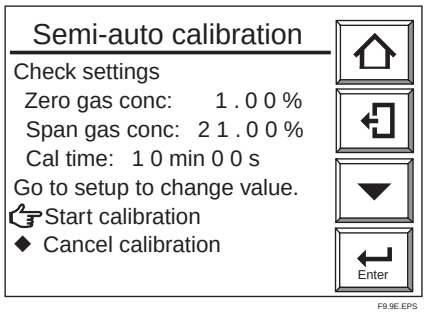

Figure 9.9 Semi-automatic Calibration Display

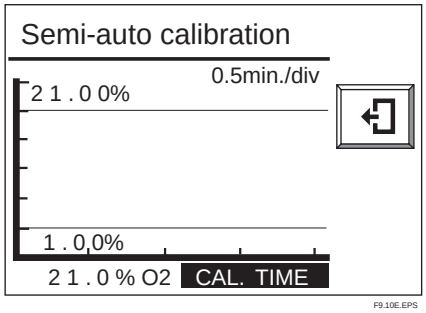

Figure 9.10 Semi-automatic Calibration Display

To start calibration using an input contact, follow these steps:

(1) Make sure that Calibration start has been selected in the Input contacts display (see Section 8.4, earlier in this manual).
(2) Apply an input contact to start calibration.

To stop calibration midway, follow these steps:
(1) Press the Return key. If this key is pressed midway during calibration, the calibration will stop and the output stabilization time will be set up.
(2) Press the Return key once again to return to the basic panel display and the analyzer will be in normal measurement.

9.2.3.3 Automatic Calibration

No execution operations are required for automatic calibration. Automatic calibration starts in accordance with a preset start day and time. Calibration is then executed at preset intervals.

CAUTION

Before conducting a semi-automatic or automatic calibration, run the automatic calibration unit beforehand to obtain a calibration flow of 600 ml/min. ± 60 ml/min.

10. Other Functions

10.1 Display

10.1.1 Detailed Display

Press the Detailed-data key on the basic panel display to display the detailed operation data as shown in Figure 10.1.

Pressing the ▼ or ▲ key, you can advance the page or go back to your desired page.

• Detailed-data display
There are ten panel displays for viewing detailed data. The following briefly describe the operational data displayed on the detailed-data display.

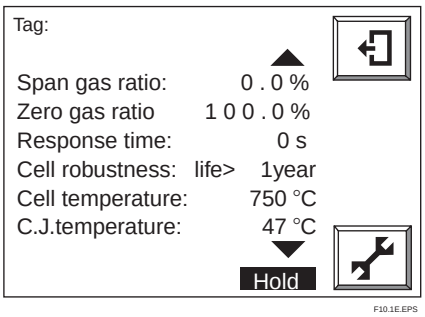

Figure 10.1 Detailed-data Display

10.1.1.1 Span-gas and Zero-gas Correction Ratios

These are used to check for degradation of the sensor (cell). If the correction ratio is beyond the limits as shown in Figure 10.2, the sensor should no longer be used.

These ratios can be found by calculating the data as shown below.

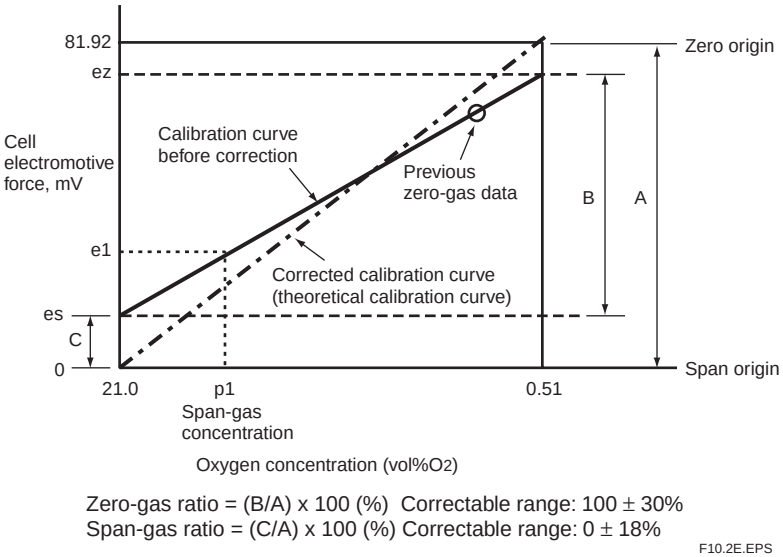

Figure 10.2

10.1.1.2 Response Time

The cell's response time is obtained in the procedure shown in Figure 10.3. If only either a zero-point or span calibration has been carried out, the response time will not be measured just as it will not be measured in manual calibration.

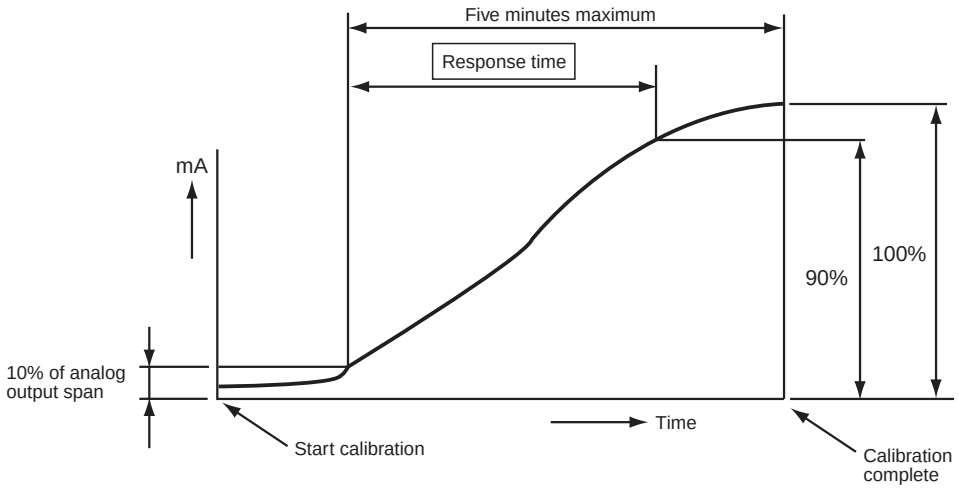

The response time is obtained after the corrected calibration curve has been found. The response time is calculated, starting at the point corresponding to ten percent of the analog output up to the point at 90 percent of the analog output span. That is, this response time is a 10-to-90-percent response.

F10.3E.EPS

Figure 10.3 Functional Drawing of Response Time

10.1.1.3 Robustness of a Cell

The robustness of a cell is an index for predicting the remaining life of a sensor and is expressed as one of four time periods during which the cell may still be used:

(1) more than a year
(2) more than six months
(3) more than three months
(4) less than one month

The above four time periods are tentative and only used for preventive maintenance, not for warranty of the performance.

This cell's robustness can be found by a total evaluation of data involving the response time, the cell's internal resistance, and calibration factor. However, if a zero or span calibration was not made, the response time cannot be measured. In such a case, the cell's robustness is found except for the response time.

10.1.1.4 Cell Temperature

This indicates the cell (sensor) temperature, usually indicating 750°C., obtainable from the thermoelectromotive force and cold junction temperature described below.

10.1.1.5 C. J. Temperature

This indicates the detector terminal box temperature, which compensates for the cold junction temperature for a thermocouple measuring the cell temperature. When the ZR22 Detector is used, the maximum C. J. temperature will be 150°C. If the terminal box temperature exceeds this, take measures, for example, so that the terminal box is not exposed to radiation to reduce that temperature.

The maximum C. J. temperature varies depending on the type of detector.

10.1.1.6 Cell Voltage

The cell (sensor) voltage will be an index to determine the amount of degradation of the sensor. The cell voltage corresponds to the oxygen concentration currently being measured. If the indicated voltage approximates the ideal value (corresponding to the measured oxygen concentration), the sensor will be assumed to be normal.

The ideal value of the cell voltage (E), when the oxygen concentration measurement temperature is controlled at 750°C., may be expressed mathematically by:

E = -50.74 log (Px/Pa) [mV]

where, Px: Oxygen concentration in the measured gas

Pa: Oxygen concentration in the reference gas, (21% O_2)

Table 10.1 shows oxygen concentration versus cell voltage.

%O2	0.1	0.2	0.3	0.4	0.5	0.6	0.7	0.8	0.9
mv	117.83	102.56	93.62	87.28	82.36	78.35	74.95	72.01	69.41

%O2	1	2	3	4	5	6	7	8	9
mv	67.09	51.82	42.88	36.54	31.62	27.61	24.21	21.27	18.67

%O2	10	21.0	30	40	50	60	70	80	90
mv	16.35	0	-7.86	-14.2	-19.2	-23.1	-26.5	-29.5	-32.1

%O2	100
mv	-34.4

T10.1E.EPS

Table 10.1 Oxygen Concentration Vs. Cell Voltage, (cell temperature: 750°C)

10.1.1.7 Thermocouple Voltage

The cell temperature is measured with a Type K (chromel-alumel) thermocouple. The thermocouple cold junction is located in the detector terminal box. The cell temperature and the thermocouple voltage (including the voltage corresponding to the cold junction temperature) are displayed.

10.1.1.8 Cold Junction Resistance (C.J. Voltage)

The ZR22 Detector measures the cold junction temperature using an RTD (Pt 1000). (The earlier model of Z021D uses transistors to measure the cold junction temperature.) If “Detector is ZR22” is selected in the Basic setup display, the RTD resistance values will be displayed. If Z021D is selected, the transistor voltage will be displayed.

10.1.1.9 Cell’s Internal Resistance

A new cell (sensor) indicates its internal resistance of 200Ω maximum. As the cell degrades, so will the cell’s internal resistance increase. The degradation of the cell cannot be found only by changes in cell’s internal resistance, however. Those changes in the cell’s internal resistance will be a hint to knowing the sensor is degrading. The updated values obtained during the calibration are displayed.

10.1.1.10 Software Revision

The revision (number) of the software installed is displayed.

10.1.1.11 Maximum Oxygen Concentration

The maximum oxygen concentration and the time of its occurrence during the period specified in the Averaging display are displayed. If the setup period elapses, the maximum oxygen concentration that has been displayed so far will be cleared and a new maximum oxygen concentration will be displayed. If the setup period of time is changed, the current maximum oxygen concentration will be displayed (for more details, see Section 8.6.2 earlier in this manual).

10.1.1.12 Minimum Oxygen Concentration

The minimum oxygen concentration and the time of its occurrence during the period specified in the Averaging display are displayed. If the setup period elapses, the minimum oxygen concentration that has been displayed so far will be cleared and a new minimum oxygen concentration will be displayed. If the setup period of time is changed, the current minimum oxygen concentration will be displayed (for more details, see Section 8.6.2 earlier in this manual).

10.1.1.13 Average Oxygen Concentration

The average oxygen concentration during the periods over which average values are calculated is displayed. If the setup period elapses, the average oxygen concentration that has been displayed so far will be cleared and a new average oxygen concentration will be displayed. If the setup period of time is changed, the current average oxygen concentration will be displayed (for more details, see Section 8.6.2 earlier in this manual).

10.1.1.14 Heater On-Time Ratio

The probe sensor is heated to and maintained at 750°C. When the measured gas temperature is high, the amount of heater ON-time decreases.

10.1.1.15 Time

The current date and time are displayed. These are backed up with built-in batteries, so no adjustment is required after the power is switched off.

10.1.1.1.16 History of Calibration Time

The calibration-conducted dates and times, and span-gas and zero-gas ratios for the past ten calibrations are stored in memory.

10.1.2 Trend Graph

Press the Graph display key in the basic panel display to switch to the graph display. This will help grasp the measured-value trend. Touching anywhere on the graph display will return to the basic panel display. To set the trend graph display, follow the steps in Section 10.1.2.1.

10.1.2.1 Setting Display Items

(1) Press the Setup key in the Basic panel display to display the Execution/Setup display. Select Maintenance from the Execution/Setup display.
(2) Select Display setup from the Maintenance display.
(3) Select Trend graph from the Display setup display. The Trend graph display shown in Figure 10.4 appears.
(4) Select “Parameter: Oxygen” from the Trend graph display. Then select the desired display item shown in Table 10.2.

Table 10.2 Trend Graph Display Items

Selected item	Description
Oxygen concentration	Oxygen concentration graph under measurement
Output 1	If this equipment is for the oxygen analyzer, the trend graph will be an oxygen concentration graph.
Output 2	If this equipment is for the oxygen analyzer, the trend graph will be an oxygen concentration graph.

T10.2E.EPS

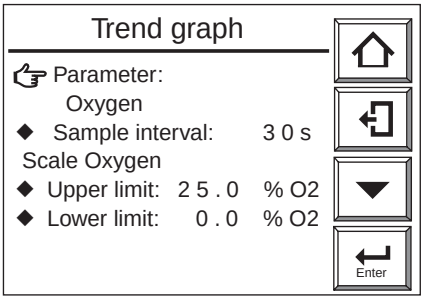

F10.4E.EPS

Figure 10.4 Trend Graph

10.1.2.2 Sampling Period

To plot a graph, set the sampling period for the measurement data.

This graph allows the plotting of 60 data items on one graduation on the time axis. So, if you set a ten-second sampling period, one graduation corresponds to 600 seconds (Figure 10.5). The allowable sampling periods range from 1 to 30 seconds. If you set a one-second sampling period, the axis of the abscissas then corresponds to five minutes. If you set it to 30 seconds, the axis of the abscissas then corresponds to 150 minutes.

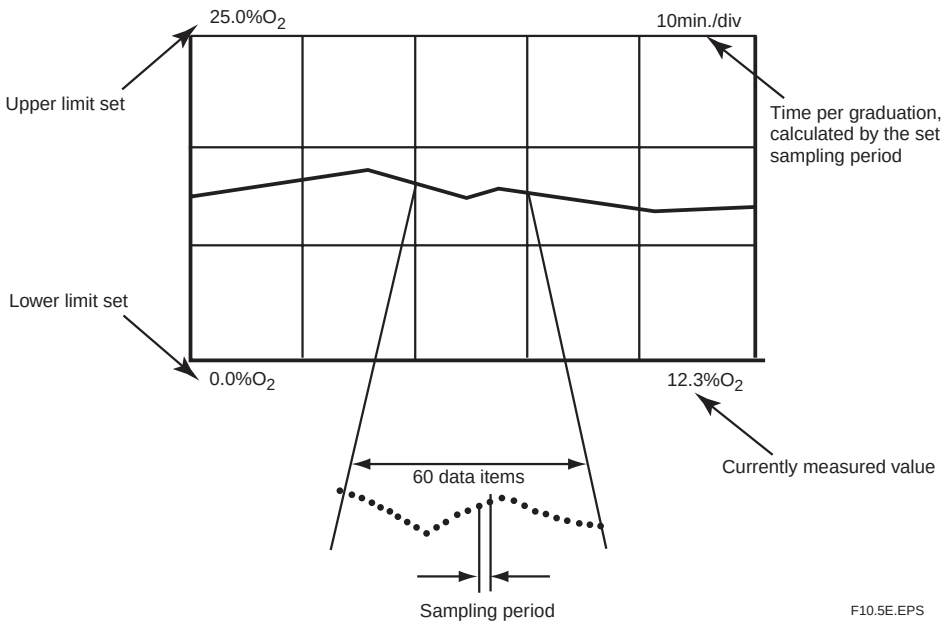

Figure 10.5 Plotting Graph for Sampling Period

10.1.2.3 Setting Upper and Lower Limit Values on Graph

Set upper- and lower-limit values on the graph in the following procedure:

Press Upper limit in the Trend graph display. The numeric-data entry key appears. Enter the upper-limit value. Also enter the lower-limit value in the same way. The allowable settings for both upper-limit and lower-limit values range from 0 to 100 percent oxygen.

10.1.2.4 Default Setting

When the analyzer is delivered, or if data are initialized, the set data are by default, as shown in Table 10.3.

Table 10.3 Default Values for Graph Setting

Item Default	Value
Parameter	Oxygen concentration
Sampling period	30 seconds
Upper limit	25%O2
Lower limit	0%O2

T10.3E.EPS

CAUTION

If a rapid change in the measured value occurs during sampling, no sampled data are plotted on the graph. Use the graph indication tentatively. Check the output current for accurate data.

10.1.3 Auto(matic) Revert Time

While the Execution/Setup display, or any other display that is positioned lower than the Execution/Setup display (see Figure 7.3.1, earlier in this manual), is displayed, if there is no key entry from the touchpanel for a certain time, the current display will automatically return to the basic panel display. This action is referred to as “auto return.”

The “auto return” time setting starts from no key entry to the return to automatic return. The “auto return” time can be set from 0 to 255 minutes. If 0 is set, there will be no automatic return. By default, the “auto return” time is set to 0 (zero).

To set the “auto return” time, follow these steps:

(1) Select the Setup key from the basic panel display to display the Execution/Setup display. Then select Maintenance from the Execution/Setup display.
(2) Select the Display setup from the Maintenance display.
(3) Select Auto return time. The numeric-data entry display then appears.
(4) Enter your desired automatic return time. If you want to set “one hour,” enter 060.

10.1.4 Entering Tag Name

You can attach a desired tag name to the equipment. To attach it, follow these steps:

(1) Select the Setup key from the basic panel display to display the Execution/Setup display. Then select Maintenance from the Execution/Setup display.
(2) Select the Display setup from the Maintenance display.
(3) Select the Display item from the Display setup display. The display shown in Figure 10.6 then appears.
(4) Select the Tag name from the Display item. The text-data entry display then appears.
(5) Enter up to 12 alphanumeric characters including codes for the desired tag name.

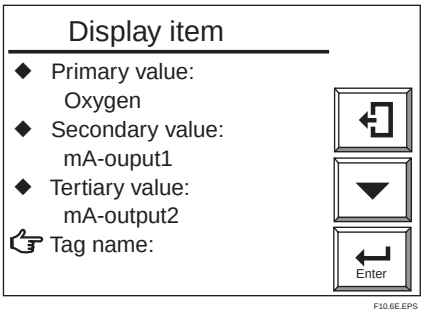

Figure 10.6 “Display Item” Display

10.1.5 Language Selection

You can select either English, German, or French as the language for the display. If you selected an English display (basic code: -E, for the display) at the time of purchase, “English” has already been selected for the language.

To select the language you want, follow these steps:

(1) Select the Setup key from the basic panel display to display the Execution/Setup display. Then select Maintenance from the Execution/Setup display.
(2) Select the Display setup from the Maintenance display.
(3) Select Language from the Display setup display. The language selection display as shown in Figure 10.7 then appears.

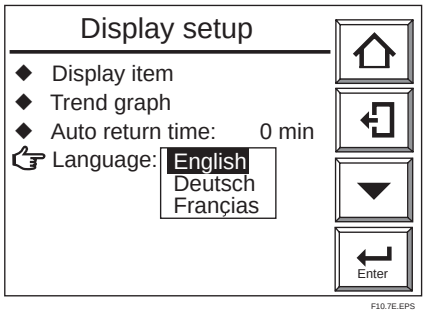

Figure 10.7 Display Setup Display

10.2 Blowback

10.2.1 Blowback Setup

The following sections describe the blowback setup procedures required for carrying out blowback.

10.2.1.1 Mode

There are three blowback modes available:

(1) No function – blowback disabled.
(2) Semi-automatic – in this mode, touchpanel operations or contact input signals will start and perform blowback operations according to a preset time and output stabilization time.
(3) Automatic – performs blowback operations automatically according to a preset interval.

These three modes each have the specific limitations described below:

- If “No Function” is selected

No blowback operations are executed.

- If “Semi-auto” is selected, semi-automatic blowback can be executed (but no calibration is made even when the automatic calibration startup time is reached.)
- If “Auto” is selected, automatic blowback can be executed in either the “Auto” or “Semi-auto” mode.

To select the desired mode, follow these steps:

(1) Select the Setup key from the basic panel display to display the Execution/Setup display. Then select Maintenance from the Execution/Setup display.
(2) Select the Blowback setup from the Maintenance display and select Mode. The mode selection display as shown in Figure 10.8 then appears.

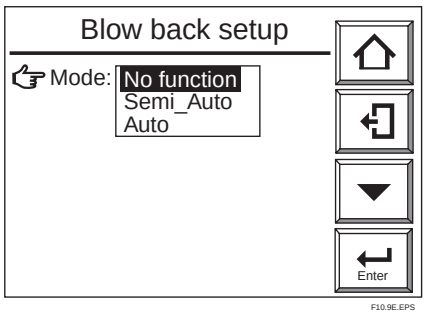

Figure 10.8 Blowback Setup Display

10.2.1.2 Operation of Blowback

Figure 10.9 shows a timing chart for the operation of blowback. To execute blowback with a contact input, use a contact input with an ON-time period of one to 11 seconds. Once blowback starts, a contact output opens and closes at ten-second intervals during the preset blowback time. After the blowback time elapses, the analog output remains held at the preset status until the hold time elapses (refer to Section 8.1, earlier in this manual).

As the hold (output stabilization) time, set the time until the measured gas is returned to the sensor and output returns to the normal operating conditions, after completing blockback operations.

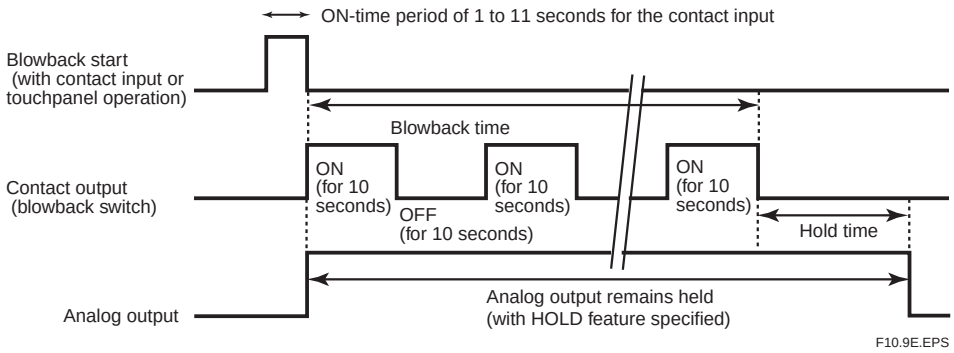

Figure 10.9 Operation of Blockback

10.2.1.3 Setting Output Hold Time and Blowback Time

If the blowback mode is in “No function,” the output “Hold time” and “Blowback time” are not displayed. If you select “Hold time,” the numeric-data entry display appears. Enter the desired “Hold time” (output-stabilization time) from 00 minutes, 00 seconds to 60 minutes, 59 seconds.

When you select “Blowback time,” the numeric-data entry display appears. Enter the desired “Blowback time” from 00 minutes, 00 seconds to 60 minutes, 59 seconds.

10.2.1.4 Setting Interval, Start Date, and Start Time

The interval is the time to execute blowback. Display the numeric-data entry panel display to set the desired interval from 000 days, 00 hours to 255 days, 59 hours.

For the “Start day” and “Start time,” set the date when the blowback is first executed and the time when to start the blowback, respectively. If you want to execute the first blowback, for example, at 4:00 p.m. on March 25, 2001, enter 25/ 03/ 01 for the Start date and 16:00 for the Start time.

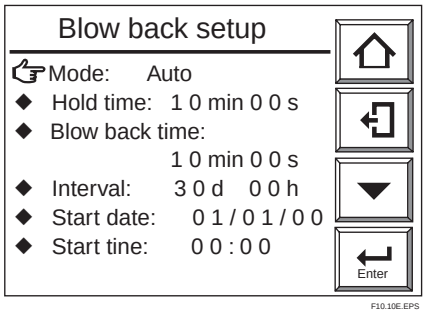

Figure 10.10 Blowback Setup Display

In the Blowback setup display shown in Figure 10.10, if you choose “Mode: No function” or “Semi-auto blowback,” the Interval, Start Date, and Start Time for these are not displayed.

CAUTION

- If the blowback is executed with an input contact, it must be preset in the Input contacts setting (for more details, see Section 8.5, earlier in this manual).
- In Section 8.4, “Output Contact Setup,” earlier in this manual, set the contact used as the blowback switch beforehand.
- Do not set any other function for the contact used as the blowback switch. Otherwise, blowback may be activated when the contact is closed by any other function.
- No blowback is executed during calibration or maintenance service. If automatic blowback reaches the preset start time during calibration or maintenance service, blowback will be executed after completing the calibration or maintenance service and after the equipment returns to the measurement mode.
- If automatic blowback reaches the preset start time during semi-automatic blowback, the current automatic blowback will not be executed.
- If you set the blowback interval at 000 days, 00 hours, only the first blowback is then executed. No subsequent blowbacks will be executed.
- If a past date is set for the Start time, no blowback will be executed.

10.2.1.5 Default Setting

When the analyzer is delivered, or if data are initialized, the blowback settings are by default, as shown in Table 10.4.

Table 10.4 Blowback Default Setting

Item	Default setting
Mode	No function ("invalid")
Hold time	10 minutes, 30 seconds
Blow-back time	10 minutes, 00 seconds
Interval	30 days, 00 hours
Start date	01/ 01/00
Start time	00:00

T10.4E.EPS

10.3 Operational Data Initialization

Individual set data initialization enables you to return to the default values set at the time of delivery. There are two types of initializations: an all set-data initialization and a function-by-function initialization. Table 10.5 lists the initialization items and default values.

To initialize the set data, follow these steps:

(1) Press the Setup key in the Basic panel display to display the Execution/Setup display. Then choose Setup.
(2) Select Others from the “Commissioning” (Setup) display.
(3) Choose “Defaults.” The “Defaults” display shown in Figure 10.11 appears.
(4) Select your desired item to initialize in order to display the “Defaults Display” shown in Figure 10.12.
(5) Choose Defaults start. Initialization then starts.

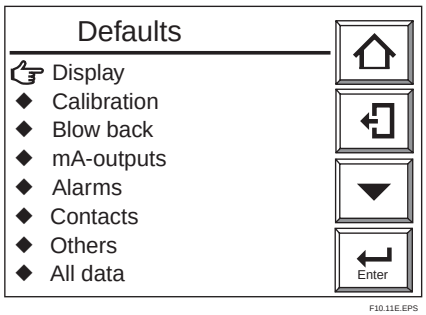

Figure 10.11 Defaults Display

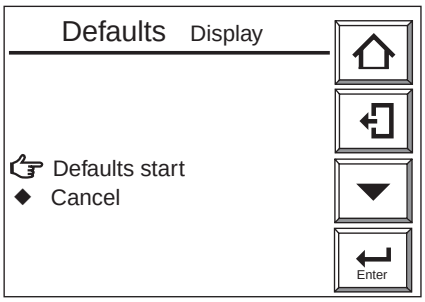

Figure 10.12 Initialization Start Display

WARNING

- Do NOT turn off the power during initialization. Otherwise, initialization will not be performed properly.

Table 10.5 Initialization Items and Default Values

Item	Data to be initialized		Default setting
Equipment selection	Type of equipment		Not initialized
	Detector		ZR22
	Measurement gas		Wet gas
Displayed data	Display item	1st display item	Oxygen concentration
		2nd display item	Current output 1
		3rd display item	Current output 2
		Tag name	Deleted
	Trend graph	Parameter	Oxygen concentration
		Sampling interval	30 seconds
		Upper limit (graph)	25%O_2
		Lower limit (graph)	0%O_2
	Automatic return time		0 min.
	Language		Not initialized
Calibration data	Calibration setting	Mode	Manual
		Calibration procedure	Span - zero
		Zero-gas concentration	1.00%O_2
		Span-gas concentration	21.00%O_2
		Output hold time	10 min., 00 sec.
		Calibration time	10 min., 00 sec.
		Interval	30 days, 00 hr.
		Start date	01/01/00
		Start time	00:00
Blowback	Blowback setting	Mode	No function (invalid)
		(Output) hold time	10 min., 00 sec.
		Blowback time	10 min., 00 sec.
		Interval	30 days, 00 hr.
		Start date	01/01/00
		Start time	00:00
Current output data	mA-output 1 mA-output 2	Parameter	Oxygen concentration
		Min. oxygen concentration	0%O_2
		Max. oxygen concentration	25%O_2
		Output damping	0%
		Output mode	Linear
	Output hold setting	Warm-up	4 mA
		Set value	4 mA
		Maintenance	Previous value held
		Set value	4 mA
		Calibration, blowback	Previous value held
		Set value	4 mA
		Error	Previous value held
		Set value	4 mA

T10.5E-1.EPS

Item	Data to be initialized			Default setting
Alarm data	Alarm setting	Parameter		Oxygen concentration
		Hysteresis		0.1%O_2
		Delayed action of alarm contact		3 seconds
	Alarm set value	High-high alarm		None
		Alarm value		100%O_2
		High-limit alarm		None
		Alarm value		100%O_2
		Low-limit alarm		None
		Alarm value		0%O_2
		Low-low alarm		None
		Alarm value		0%O_2
Contacts	Output contact 1	Alarm		None
		Other settings	Warm-up	On
			Output range now being switched	None
			Now calibrating	None
			Now maintenance servicing	On
			Blowback	None
			High-limit temp. alarm	None
			Calibration gas press. drop	None
			Gas leak detection	None
		Contact output action		Open
Other settings	Output contact 2	Alarm		None
			Warm-up	None
			Output range switching	None
			Now calibrating	On
			Now maintenance servicing	None
			Blowback	None
			High-limit temp. alarm	None
			Calibration gas press. drop	None
			Gas leak detection	None
		Contact output action		Closed
	Output contact 3	Alarm	High-high alarm	None
			High-limit alarm	On
			Low-limit alarm	On
			Low-low alarm	None
			Error	None
		Other settings		None
		Contact output		Closed
	Output contact 4	Alarm	High-high alarm	None
			High-limit alarm	None
			Low-limit alarm	None
			Low-low alarm	None
			Error	On
		Other settings		None
	Input contact 1	Function		None
	Input contact 2	Action		Closed
Other data	Average value/ Maximum and minimum values		Average-value calculation	One hour
			Intervals over which max. and min. values are monitored	24 hours
	Fuel set value		Amount of water vapor in exhaust gas	1.00 m^3/kg (m^3)
			Theoretical amount of air	1.00 m^3/kg (m^3)
			X value	1.00
			Absolute humidity of atmosphere	0.1 kg/kg
	Password			Deleted

T10.5E-2.EPS

10.4 Reset

Resetting enables the equipment to restart. If the equipment is reset, the power is turned off and then back on. In practical use, the power remains on, and the equipment is restarted under program control. Resetting will be possible in the following conditions:

(1) Error 1 – if the cell voltage is defective
(2) Error 2 – if a temperature alarm occurs
(3) Error 3 – if the A/D converter is defective
(4) Error 4 – if an EEPROM write error occurs
For details on error occurrence, consult Chapter 12, “Troubleshooting,” later in this manual.

If any of the above problems occurs, the equipment turns off the power to the detector heater. To cancel the error, reset the equipment following the steps below, or turn the power off and then back on.

Note

Make sure that before resetting or restarting the power that there is no problem with the detector or converter.

If a problem arises again after the resetting, turn the power off and troubleshoot the problem by consulting the Troubleshooting chapter later in this manual.

To reset the equipment, follow these steps:

(1) Press the Setup key in the Basic panel display to display the Execution/Setup display.
(2) Choose Reset. The Reset display shown in Figure 10.13 appears.
(3) Choose Start reset and then press the [Enter] key to reset the equipment and the equipment will then be in its warm-up state.

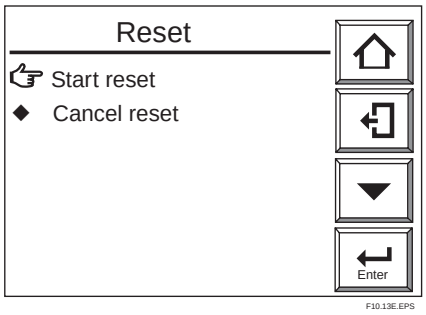

Figure 10.13 Reset Display

10.5 Handling of the ZO21S Standard Gas Unit

The following describe how to flow zero and span gases using the ZO21S Standard Gas Unit. Operate the ZO21S Standard Gas Unit, for calibrating a system classified as System 1, according to the procedures that follow.

10.5.1 Standard Gas Unit Component Identification

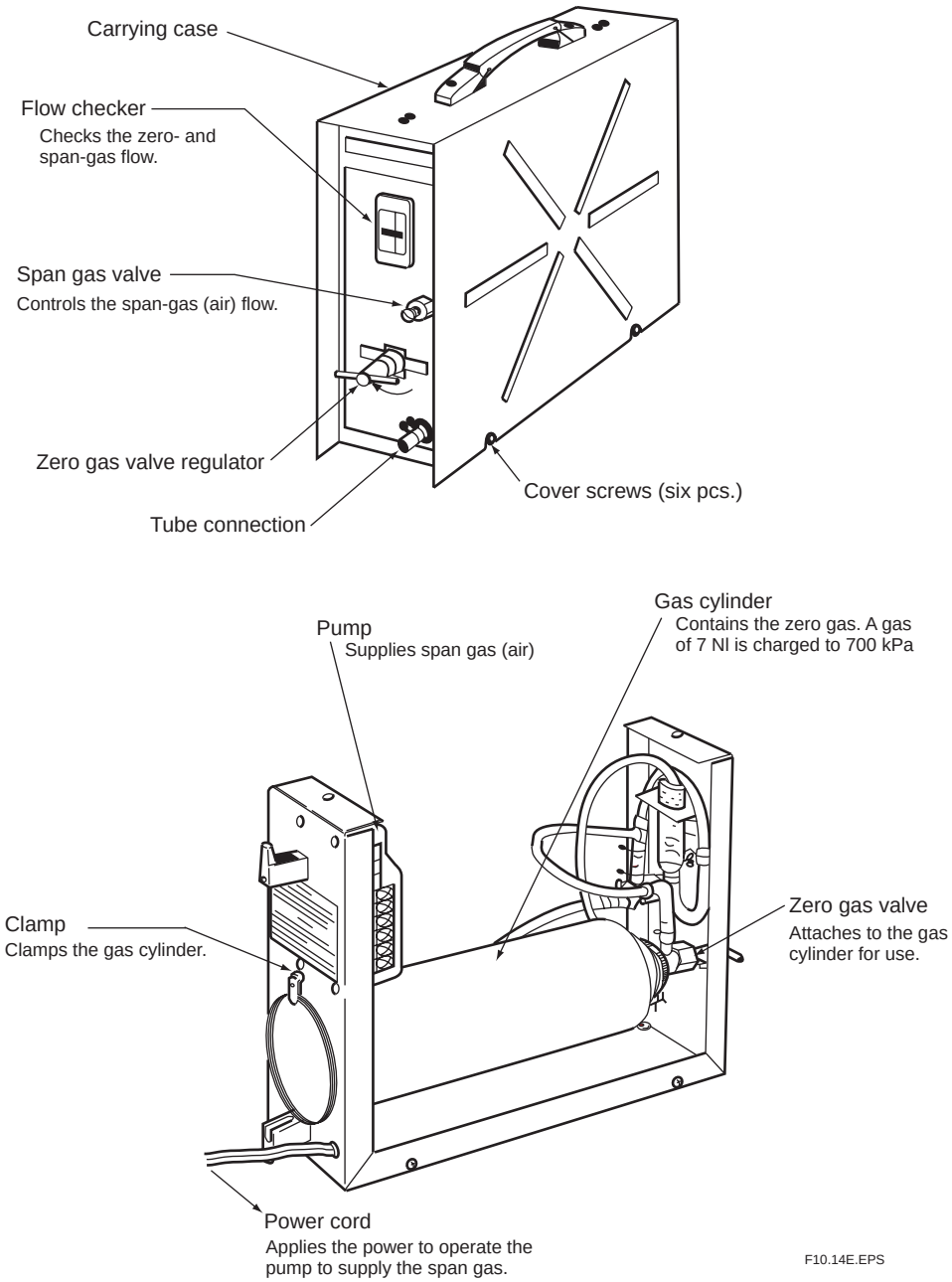

Figure 10.14 Standard Gas Unit Component Identification

10.5.2 Installing Gas Cylinders

Each ZO21S Standard Gas Unit comes with six zero-gas cylinders including a spare. Each gas cylinder contains 7-liters of gas with a 0.95 to 1.0 vol% O_2 (concentration varies with each cylinder) and nitrogen, at a pressure of 700 kgPaG (at 35°C).

The operating details and handling precautions are also printed on the product. Please read them beforehand.

To install the gas cylinder, follow these steps:

(1) Attach the zero gas valves onto the gas cylinder. First, turn the valve regulator of the zero gas valves counterclockwise to completely retract the needle at the top from the gasket surface. Maintaining the valve in this position, screw the valve mounting into the mouthpiece of the gas cylinder. (If screw connection is proper, you can turn the screw manually. Do not use any tool.) When the gasket comes in contact with the mouthpiece of the gas cylinder and you can no longer turn it manually, tighten the lock nut with a wrench.
(2) Remove the carrying case from the standard gas unit. The case is attached to the unit with six screws. So, loosen the screws and lift them off.
(3) Slide the gas cylinder through the hole in the back of the unit and connect the tube (the piping in the unit) to the valve connections. Insert each tube at least 10 mm to prevent leakage, and secure it using a tube clamp.
(4) Attach the gas cylinder to the case. Extend the valve regulator of the zero gas valves through the hole in the front panel of the unit and secure the bottom of the cylinder with the clamp.
(5) Take note of the oxygen concentration of the sealed gas indicated on the gas cylinder and replace the carrying case. Enter the oxygen concentration of the sealed gas, following instructions on the converter display. Also check that no piping is disconnected.

Thus, the work of installing a gas cylinder is completed. However, gases in the cylinders cannot immediately flow out after these procedures. To discharge the gases, it is necessary for the needle in the zero gas valves to puncture a hole in the gas cylinder (see Section 10.5.3).

10.5.3 Calibration Gas Flow

<Preparation before calibration>

(1) To operate the standard gas unit, place it on a nearly horizontal surface in order to allow the flow check to indicate the precise flow rate. In addition, a power supply for driving the span gas (air) supply pump is required near the unit (the length of the power cord attached to the unit is 2 m). Select a suitable location for the unit near the installation site of the converter.
(2) Connect the tube connector port of the standard gas unit to the calibration gas inlet of the detector, using a polyethylene resin tube with an outside diameter of 6 mm. Be careful to prevent gas leakage.
(3) Fully open the needle valve mounted on the calibration gas inlet of the detector.
(4) Enter the oxygen concentration of the sealed gas (noted from the cylinder) into the converter. Also check that the oxygen concentration of the span gas is correctly set (21 vol% O_2 for clean air). When using the ZO21S Standard Gas Unit (for use of the atmospheric air as a span gas), use a hand-held oxygen analyzer to measure the actual oxygen concentration, and then enter it.

<Flow of span gas (air)>

The standard gas unit is used only when manual calibration is employed. Therefore, the timing for flowing span gas (air) is included in the manual calibration flowchart described in Section 10.5.2. For operation of the converter, see Section 7.12, earlier in this manual.

(1) When the message “Open span gas valve” is displayed on the converter display during calibration, plug the power cord into the power supply socket to start the pump of the standard gas unit.

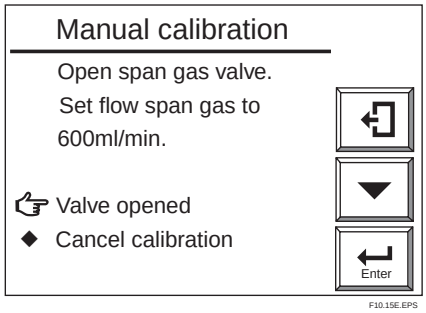

Figure 10.15 Manual Calibration Display

(2) Next, adjust the flow rate to 600 ml/min ± 60 ml/min using the span gas valve “AIR” (the flow check ball stops floating on the green line when the valve is slowly opened). To rotate the valve shaft, loosen the lock nut and turn it using a flat-blade screwdriver. Turning the valve shaft counterclockwise increases the flow rate.

(3) After adjusting the flow rate, tighten the valve lock nut.

(4) Select Valve opened (to start calibration) from the Manual calibration display shown in Figure 10.15. Check the Trend graph display to see that the measured value is stabilized. Then press the [Enter] key. The Manual calibration display shown in Figure 10.16 appears. Disconnect the power cord to stop the pump.

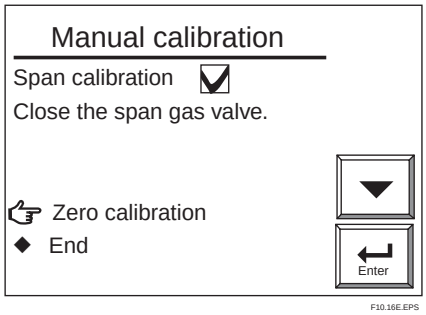

Figure 10.16 Manual Calibration Display

<Flow of zero gas>

Cause a zero gas to flow according to the Manual calibration display shown in Figure 10.17.

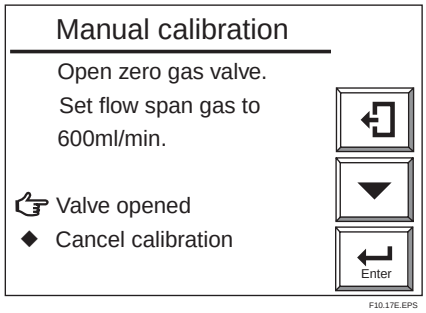

Figure 10.17 Manual Calibration Display

(1) Use the needle of the zero gas valve " CHECK GAS " to puncture a hole in the gas cylinder installed as described in Section 10.5.2. Fully clockwise turn the valve regulator by hand.

(2) Next, adjust the flow rate to 600 ml/min ± 60 ml/min (the flow check ball stops floating on the green line when the valve is slowly opened). Turn the regulator of the zero-gas valves back slowly counterclockwise. At that time, the flow rate also decreases as the inner pressure of the gas cylinder decreases. Therefore, monitor the flow check and, when the ball's position changes greatly, readjust the valve.

(3) Select Valve opened (to start calibration) from the Manual calibration display. Check the Trend graph display to see that the measured value is stabilized. Then press the [Enter] key. The Manual calibration display shown in Figure 10.18 appears. Then stop the zero-gas flow immediately. Turn the zero-gas valve regulator fully clockwise. If this valve regulator is not properly adjusted, the needle valve will not close completely and a cylinder gas may leak.

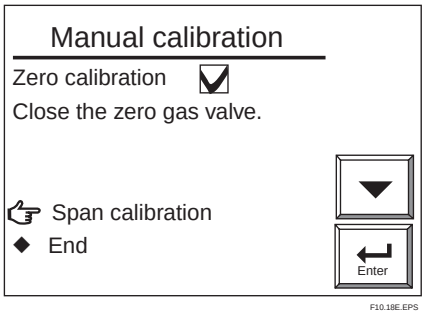

Figure 10.18 Zero-gas Calibration Complete (in Manual Calibration Display)

Note

Be sure not to terminate a calibration in progress because of a shortage of gas in the cylinder. Each gas cylinder is operable for nine minutes or more provided the gas is discharged at the specified rate. Therefore, if your calibration time is estimated at four minutes, you can operate the zero-point calibration twice.

<Treatment after completion of calibration>

(1) Fully close the needle valve mounted on the calibration gas inlet of the detector.

(2) Remove the tube connecting the detector to the standard gas unit.

WARNING

Store the standard gas unit with the gas cylinder mounted where the ambient temperature does not exceed 40°C. Otherwise, the gas cylinder may explode. Store the spare gas cylinders under the same condition.

10.6 Methods of Operating Valves in the ZA8F Flow Setting Unit

The ZA8F Flow Setting Unit is used as a calibration device for a system conforming to System 2. Calibration in such a system is to be manually operated. So, you have to operate the valve of the Flow Setting each time calibration is made (starting and stopping the calibration gas flow and adjusting the flow rate). This applies even if you are using the ZR40H Autocaliration Unit. For operation of the converter, see Section 7.12, earlier in this manual.

10.6.1 Preparation Before Calibration

To operate the ZA8F Flow Setting Unit, prepare for calibration as follows:

(1) Check for a complete closing of the zero gas flow setting valve in the unit and open the regulator valve for the zero gas cylinder until the secondary pressure equals measured gas pressure + approx 50 kPa (or measured gas pressure plus approx. 150 kPa when a check valve is used, maximum pressure rating is 300 kPa).

(2) Check that the oxygen concentration of the zero gas and span gas (instrument air 21 vol% O_2) in the cylinder is set in the converter.

10.6.2 Operating the Span Gas Flow Setting Valve

The following description is given assuming that instrument air, the same as the reference gas, is used as the span gas.

(1) When the display shown in Figure 10.15 appears during calibration, open the span gas flow setting valve of the flow setting unit and adjust the flow rate to 600 ml/min ± 60 ml/min. Turn the valve slowly counterclockwise after loosening the lock nut if the valve has a lock nut. To check the flow rate, use the calibration flow meter. If the measurement gas pressure is extremely high, adjust the measurement gas pressure to obtain pressures (listed in Table 10.6) ± 10%.

Table 10.6

Measurement gas pressure (kPa)	50	100	150	200	250
Flowrate (ml/min)	500	430	380	250	320

T10.6E.EPS

(2) Adjust the flow rate and select Valve opened from the Manual calibration display. Check the Trend graph display to see that the measured value is stabilized. Then press the [Enter] key. The Manual calibration display shown in Figure 10.16 appears.

(3) Close the span gas flow setting valve to stop the span gas (air) flow. If the valve has a lock nut, be sure to tighten the lock nut to prevent any leakage of span gas into the sensor during measurement.

10.6.3 Operating the Zero Gas Flow Setting Valve

Operate the zero gas flow setting valve during zero-point calibration in the following procedures:

(1) When the display shown in Figure 10.17 appears during calibration, open the zero gas flow setting valve of the flow setting unit and adjust the flowrate to 600 ml/min ± 60 ml/min. To rotate the valve shaft, if the valve has a lock nut loosen the lock nut and slowly turn it counterclockwise. To check the flowrate, monitor the calibration gas flow meter.
If the measurement gas pressure is extremely high, adjust the measurement gas pressure to obtain pressures (listed in Table 10.6) ± 10%.

Table 10.6

Measurement gas pressure (kPa)	50	100	150	200	250
Flowrate (ml/min)	500	430	380	250	320

T10.6E.EPS

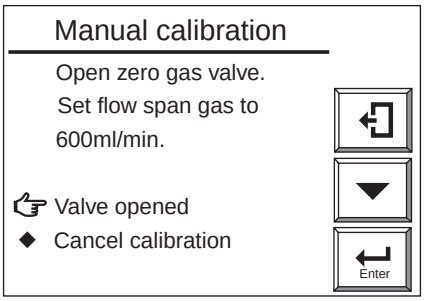

F10.17E.EPS

Figure 10.17 Manual Calibration Display

(2) Adjust the flowrate and select Valve opened from the Manual calibration display. Check the Trend graph display to see that the measured value is stabilized. Then press the [Enter] key. The Manual calibration display shown in Figure 10.18 appears.

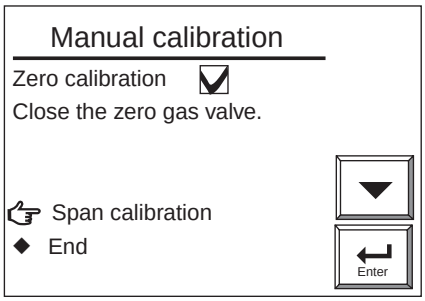

F10.18E.EPS

Figure 10.18 Zero-point Calibration Complete (in Manual Calibration)

(3) Close the zero gas flow setting valve to stop the zero gas flow. If the valve has a lock nut, be sure to tighten the lock nut to prevent the any leakage of the zero gas into the sensor because the valve may become loose during measurement.

10.6.4 Operation After Calibration

No special operation of the instrument is needed after calibration. However, it is recommended that the pressure regulator for the zero gas cylinders be closed because calibration is not required so often.

11. Inspection and Maintenance

This chapter describes the inspection and maintenance procedures for the EXAxtZR Zirconia Oxygen Analyzer to maintain its measuring performance and normal operating conditions.

CAUTION

When checking the detector, carefully observe the following:

(1) Do NOT touch the probe if it has been in operation immediately just before being checked. (The sensor at the tip of the probe heats up to 750 ° C during operation. If you touch it, you will get burned.)
(2) Do not subject the probe to shock or cool it rapidly.
The sensor is made of ceramic (zirconia). If the detector is dropped or bumped into something, the sensor may be damaged and no longer work.
(3) Do not reuse a metal O-ring to seal the cell assembly. If you replace the cell or remove it from the probe for checking, be sure to replace the metal O-ring. Otherwise, the furnace gas may leak, and then the leaking corrosive gas will cause the built-in heater or thermocouple to go open circuit, or the detector may corrode.
(4) Handle the probe with care so that the dust-filter mounted screws on the tip of the probe do not hurt your finger(s).
(5) Before opening or closing the terminal box, first remove dust, sand, or the like from the terminal box cover.

11.1 Inspection and Maintenance of the Detector

11.1.1 Cleaning the Calibration Gas Tube

The calibration gas, supplied through the calibration gas inlet of the terminal box into the detector, flows through the tube and comes out at the tip of the probe. The tube might become clogged with dust from the measurement gas. If you become aware of clogging, such as when a higher pressure is required to achieve a specified flow rate, clean the calibration gas tube.

To clean the tube, follow these steps:

(1) Remove the detector from the installation assembly.
(2) Following Section 11.1.2, later in this manual, remove the four bolts (and associated spring washers) that tighten the sensor assembly, and the pipe support as well as the U-shaped pipe.
(3) Use a rod 2 to 2.5 mm in diameter to clean the calibration gas tube inside the probe. In doing this, keep air flowing from the calibration gas inlet at about 600 ml/min and insert the rod into the tube (3-mm inside diameter). However, be careful not to insert the rod deeper than 40 cm for a general-purpose detector, or 15 cm for a high-temperature detector.
(4) Clean the U-shaped pipe. The pipe can be rinsed with water. However, it should be dried out thoroughly before reassembly.
(5) Restore all components you removed for cleaning. Follow Section 11.1.2 to restore all components in their original positions. Be sure to replace the O-ring(s) with new ones.

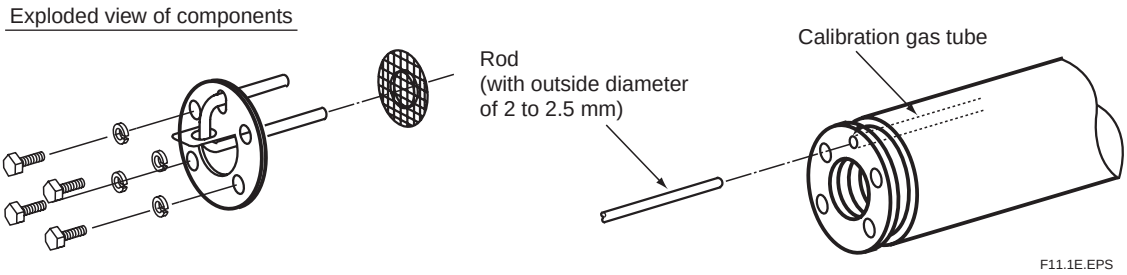

Figure 11.1 Cleaning the Calibration Gas Tube

11.1.2 Replacing the Sensor Assembly

The performance of the sensor (cell) deteriorates as its surface becomes soiled during operation. Therefore, you have to replace the sensor when its life expectancy expires, for example, when it can no longer satisfy a zero-gas ratio of 100±30 percent or a span-gas ratio of 0±18 percent. In addition, the sensor assembly is to be replaced if it becomes damaged and can no longer operate during measurement.

If the sensor becomes no longer operable (for example, due to breakage), investigate the cause and remedy the problem as much as possible to prevent recurrence.

CAUTION

- If the sensor assembly is to be replaced, allow enough time for the detector to cool down from its high temperature. Otherwise, you may get burned. If the cell assembly is to be replaced, be sure to replace the metal O-ring and the contact together. Additionally, even in a case where the cell is not replaced, if the contact becomes deformed and cannot make complete contact with the cell, replace the contact.
- If there is any corroded or discolored area in the metal O-ring groove in which the contact is embedded, sand the groove with sandpaper or use a metal brush, and then sand further with a higher grade of sandpaper (no. 1500 or so), or use an appropriate metal brush to eliminate any sharp protrusions on the groove. The contact's resistance should be minimized.
- Use sensor assemblies manufactured in or after Sept. 2000: the serial number on the side of the sensor assembly should be 0J000 or later (for example: OK123, 1AA01 etc)

1. Identifying parts to be replaced

In order not to lose or damage disassembled parts, identify the parts to be replaced from among all the parts in the sensor assembly. Normally, replace the sensor, metal O-ring and contact together at the same time. If required, also replace the U-shaped pipe, bolts, filter and associated spring washers.

2. Removal procedures

(1) Remove the four bolts and associated washers from the tip of the detector probe.
(2) Remove the U-shaped pipe support together with the U-shaped pipe. Remove filter also.
(3) Pull the sensor assembly toward you while turning it clockwise. Also, remove the metal O-ring between the assembly and the probe. Remove filter also.
(When replacing the assembly, be careful not to scratch or dent the tip of the probe with which the metal O-ring comes in contact (the surface with which the sensor flange also comes in contact). Otherwise, the measurement gas will not be sealed.)
(4) Use tweezers to pull the contact out of the groove in the tip of the probe.
(5) Clean the sensor assembly, especially the metal O-ring contact surface to remove any contaminants adhering to that part. If you can use any of the parts from among those removed, also clean them up to remove any contaminants adhering to them.
(Once the metal O-ring has been used, it can not be reused. So, be sure to replace it.)

3. Part assembly procedure

(1) First, install the contact. Being careful not to cause irregularities in the pitch of the coil spirals (i.e., not to bend the coil out of shape), place it in the ringed groove properly so that it forms a solid contact.

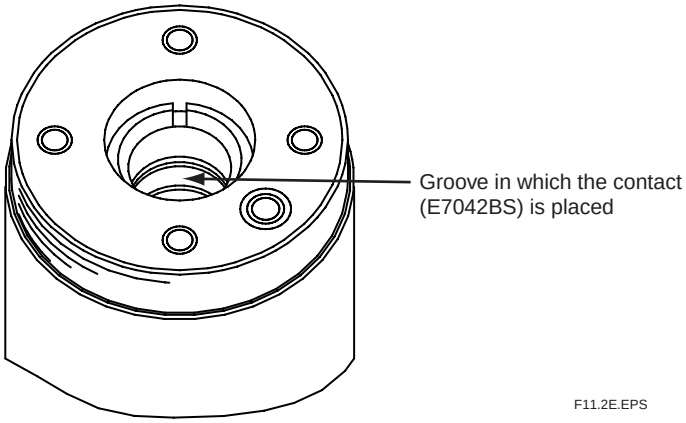

Figure 11.2 Installing the Contact

(2) Next, make sure that the O-ring groove on the flange surface of the sensor is clean. Install the metal O-ring in that O-ring groove, and then insert the sensor in the probe while turning it clockwise. After inserting it until the metal O-ring comes in contact with the probe's O-ring contact surface, properly align the U-shaped-pipe insertion holes with the bolt openings.

(3) Attach the U-shaped pipe to its support with filter, then fully insert the U-shaped pipe and its support into the probe.

(4) Coat the threads of the four bolts with antiseize grease and then screw them in along with the washers. First, tighten the four bolts uniformly by hand, and then use a torque wrench to tighten all areas of the metal O-ring uniformly, that is, to make sure the sensor flange is perfectly horizontal to the O-ring's working face in the probe. This is done by tightening first one bolt and then its opposing bolt each 1/8 turn, and then one of the other bolts followed by its opposing bolt, each also 1/8 turn. This continues in rotating fashion until they are all fully tightened with the torque wrench preset to approximately 5.9 N • m. If they are not uniformly tightened, the sensor or heater may be damaged.

Replacement of the sensor assembly is now complete. Install the detector and restart operation. Calibrate the instrument before making a measurement.

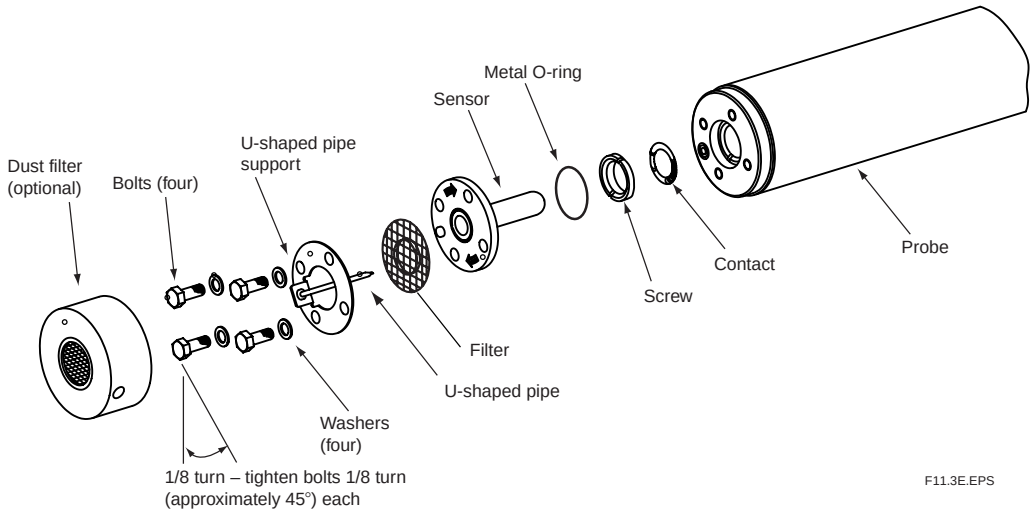

Figure 11.3 Exploded View of Sensor Assembly

CAUTION

Optional Inconel bolts have a high coefficient of expansion. If excess torque is applied while the bolts are being tightened, abnormal strain or bolt breakage may result. So, tighten the bolts following the instructions given above.

11.1.3 Replacement of the Heater Unit

This section describes the replacement procedure for the heater unit.

The sensor or ceramic heater-furnace core internal structure is subject to fracturing, so do NOT subject it to strong vibrations or shock. Additionally, the heater unit reaches high temperatures and is subjected to high voltages. So, maintenance services should be performed after the power is off and the heater unit temperature has returned to normal room temperature.

For details, refer to IM11M12A01-21E " Heater Assembly ".

Note

If the heater strut assembly can not be removed because a screw has fused to its thread, one of our service representatives can fix it.

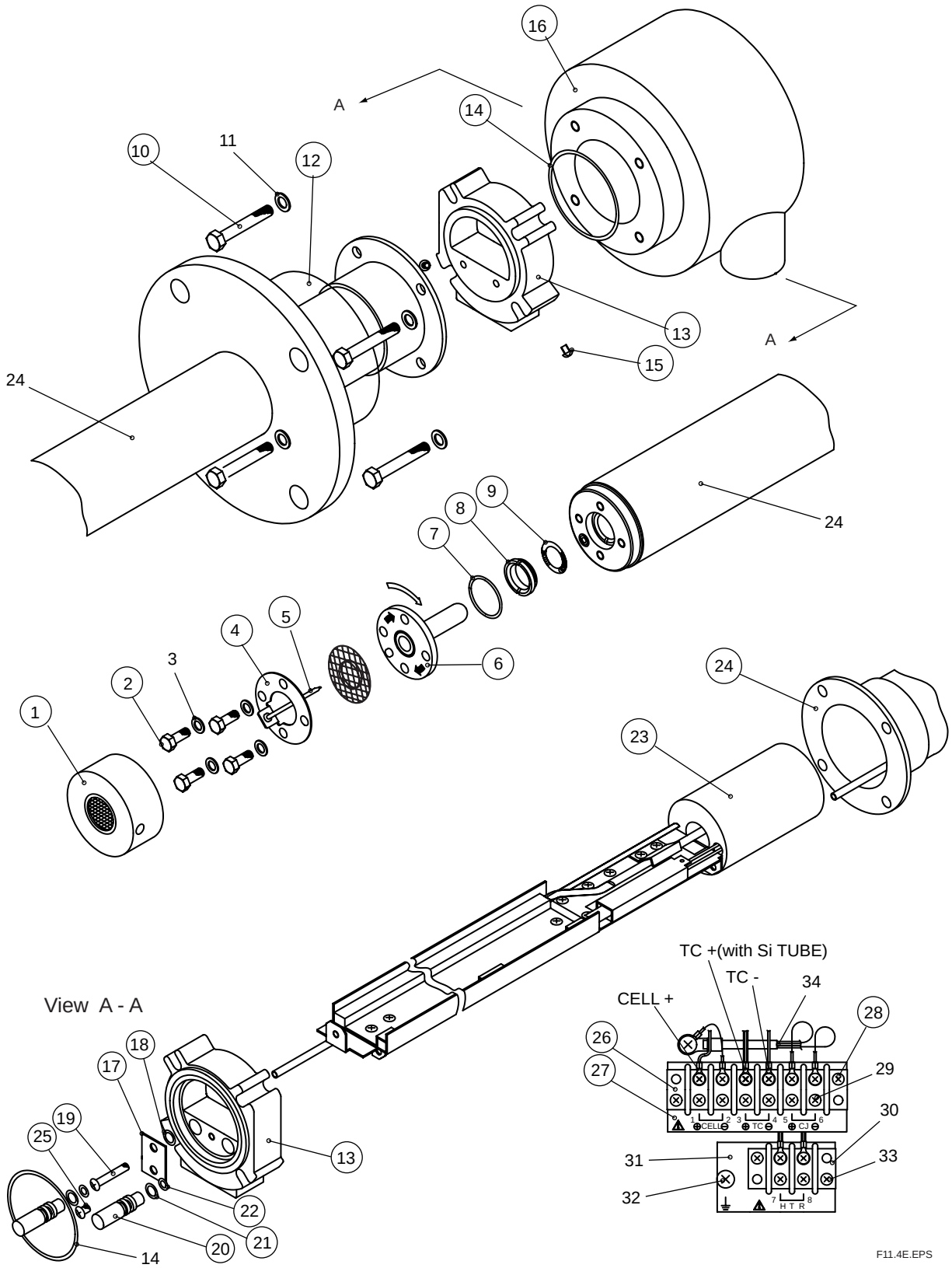

Figure 11.4 Exploded View of Detector

Replacement of heater strut assembly

Refer to Figure 11.4 as an aid in the following discussion.

Remove the cell assembly (6), following Section 11.1.2, earlier in this manual. Open the terminal box and remove the three terminal connections – CELL +, TC + and TC -. To disconnect the HTR terminals, remove the terminal block screw (28). The other terminal connections remain connected; disconnect the two HTR connections. (These terminals have no polarity.)

Remove the two screws (15) that fasten the cover (12) and slide it to the flange side. Remove the four bolts (19) and terminal box (16) with care so that the already disconnected wire will not get caught in the terminal box.

Loosen Screw (19) until Heater Strut Assembly (23) plate can be removed.

There's no need to remove O-ring (18) which prevents Screw (19) from coming out.

Pull out connector (13).

Loosen and remove the screw (8) with a special wrench (part no. K9470BX or equivalent) and then remove the heater strut assembly (23) from the detector (24).

To reassemble the heater strut assembly, reverse the above procedure:

Insert the heater strut assembly (23) into the detector (24), while inserting the calibration pipe in the detector (24) into the heater section in the heater strut assembly (23) as well as in the bracket hole. Coat the screw (8) with grease (NEVER-SEEZ: G7067ZA) and tighten the screw (8) with a special tool (part no. K9470BX or equivalent) with a tightening torque of 12N • m ± 10 percent.

Next, to install the O-rings (22) on the calibration-gas and reference-gas pipes, disassemble the connector (13) in the following procedure:

First, remove the screw (25) and then remove the plate (17) and two caps (20). If the O-ring (22) remains in the hole, pull them out from the back. Pass the heater and thermocouple leadwire through the connector (13). Also, pass the calibration-gas and reference-gas pipes through the opening of the connector (13). If the O-ring (22) fails, replace it with a new one.

Push the two caps (20) into the associated opening of the connector (13). Insert the plate (17), aligning it with the groove of the cap (20), and tighten it with the screw (25). If you attempt to insert the calibration-gas and reference-gas pipes into the connector (13) without disassembling the connector (13), the O-ring may be damaged. Tighten the Tighten Screw (19) in Heater Strut Assembly (23) until connector (13) can't move.

Reassemble in reverse order to the above disassembly procedure.

The two wires with ceramic insulators from the heater strut assembly are heater wires, and the single-core shielded wire is the cell signal + terminal; for the two-core shielded cable, the semi-translucent rubber-sheathed wire is the thermocouple + terminal, and the other wire is the −terminal. (If the wires are marked, match the markings with those on the terminal board).

When installing the cell assembly (6), replace the metal O-ring (7) with a new one.

11.1.4 Replacement of filter assembly

Set the filter assembly (1) in place using a special pin spanner (with a pin 4.5 mm in diameter: part no. K9471UX or equivalent). If a filter assembly that has already been replaced once is used again, apply grease (NEVER-SEEZ: G7067ZA) to the threads of the filter assembly.

11.1.5 Replacement of O-ring

The detector uses three different types of O-rings (14), (21), and (22). One O-ring alone (14), or two O-rings (21) and (22) are used. (For a pressure-compensating model, two O-rings are used for individual uses. Two O-rings (21) and (22) are used for reference-gas sealing and require periodic replacement.

11.1.6 Cleaning the High-temperature Probe Adapter

CAUTION

- Do NOT subject the probe of the High-temperature Probe Adapter (ZO21P-H-A) to shock. This probe uses silicon carbide (SiC) which may become damaged if it is subjected to a strong shock or thermal shock.

The high-temperature detector is structured so that the gas to be measured is directed toward the detector with the high-temperature probe adapter. Therefore, if the probe or the sample gas outlet clogs, a precise measurement is no longer possible because of no gas flow. If you use the high-temperature detector, you have to inspect it periodically and, if any part of it is significantly clogged with dust, clean it.

Dust found sticking to the probe should be blown off. If any dust still remains after the blowing, clean it with a metal rod, etc., inserted. In addition, if dust is found on the auxiliary ejector or needle valve (choke) at the sample gas outlet, remove these parts from the high-temperature probe adapter and then clean them. To remove dust, blow air on them or rinse them with water.

11.2 Inspection and Maintenance of the Converter

The converter does not require routine inspection and maintenance. If the converter does not work properly, in most cases it probably comes from problems or other causes.

A dirty touchpanel should be wiped off with a soft dry cloth.

11.2.1 Replacing Fuses

The converter incorporates a fuse, as indicated in Figure 11.5. If the fuse blows out, replace it in the following procedure.

Note

If a replaced fuse blows out immediately, there may be a problem in the circuit. Go over the circuit completely to find out why the fuse has blown.

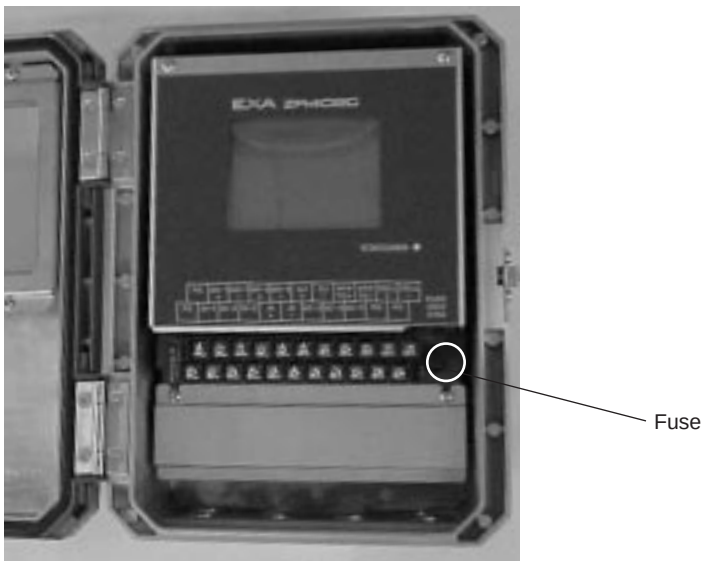

F11.5E.EPS

Figure 11.5 Location of Fuse in the Converter

To replace the fuse, follow these steps:

(1) Turn off the power to the converter for safe replacement.
(2) Remove the fuse from its holder. With the appropriate flat-blade screwdriver that just fits the holder cap slot (Figure 11.6), turn the fuse holder cap 90° counterclockwise. By doing so, you can remove the fuse together with the cap.

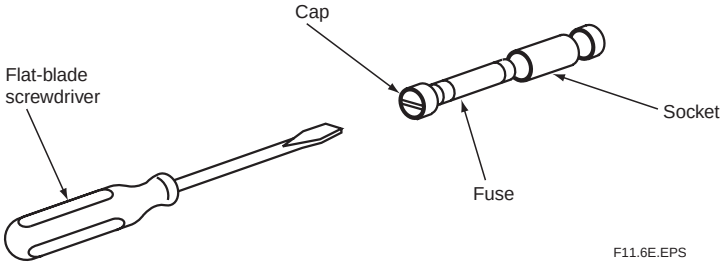

Figure 11.6 Removing the Fuse

(3) Check the rating of the fuse and that it satisfies the following:
Maximum rated voltage: 250 V
Maximum rated current: 3.15 amperes
Type: Time-lag fuse
Standards: UL-, CSA- or VDE-approved
Part number: A1113EF

Place a new, properly rated fuse in the holder together with the cap, and push and turn the cap clockwise 90+‹with the screwdriver to complete installation of the fuse.

11.2.2 Cleaning

Use a soft dry cloth to clean any part of the converter during inspection and maintenance.

11.3 Replacing Flowmeter in ZR40H Autocalibration Unit

(1) Remove piping and wiring, and remove the ZR40H from the 2B pipe or wall mounting.
(2) Remove four M6 bolts between brackets.
(3) Remove piping extension
(4) Remove bolts holding flowmeter, and replace it. A white back plate (to make the float easy to see) is attached. The end of the pin holding down the back plate must be on the bracket side.
(5) Replace piping, and fix M6 bolts between brackets. *1

*1 : When disassembling and reassembling, mark original positions, and tighten an extra 5-10° when reassembling. After tightening, do a liquid leakage test.

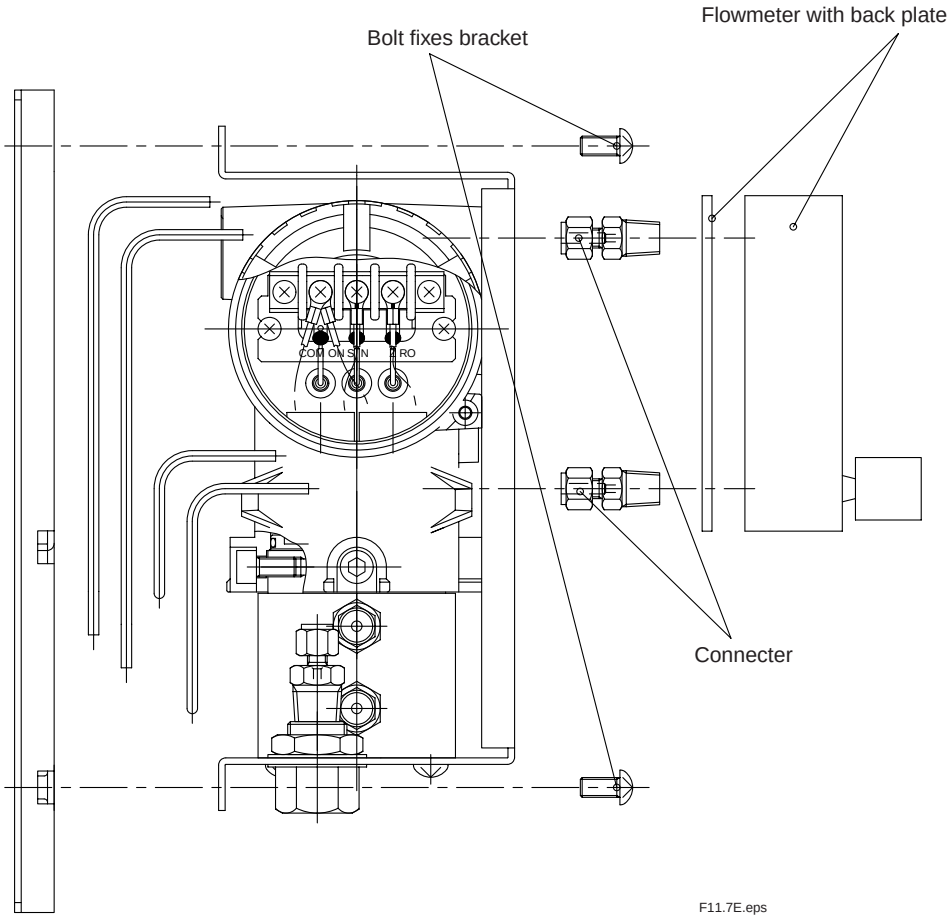

Fig. 11.7 Flowmeter replacement

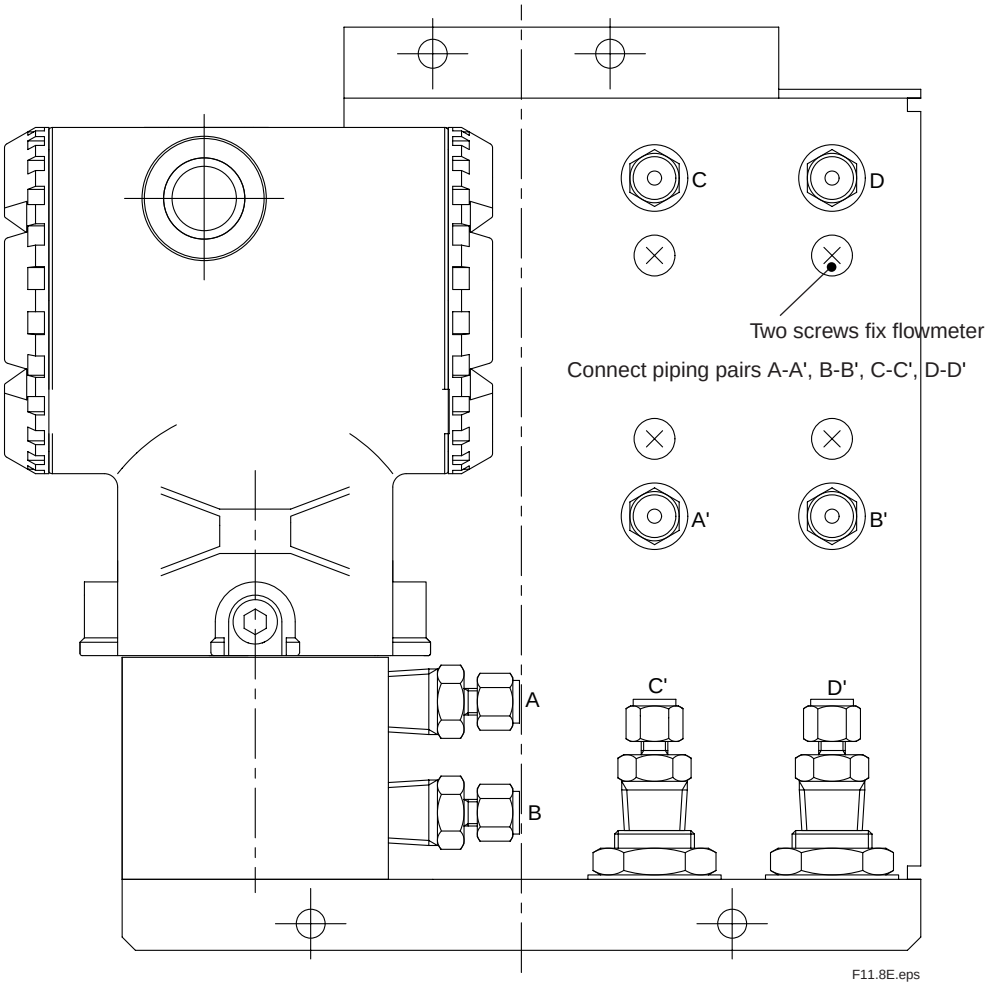

Fig. 11.8 Fixing Flowmeter

12. Troubleshooting

This chapter describes errors and alarms detected by the self-diagnostic function of the converter. This chapter also describes the check and restoration methods to use when problems other than the above occur.

12.1 Displays and Measures to Take When Errors Occur

12.1.1 What is an Error?

An error is detected if any abnormality is generated in the detector or the converter, e.g., in the cell (sensor) or heater in the detector, or the internal circuits in the converter. If an error occurs, the converter performs the following:

(1) Stops the supply of power to the heater in the detector to insure system safety.
(2) Causes an error indication in the display to start blinking to notify of an error generation (Figure 12.1).
(3) Sends an output contact if the error is set up for “Output contact setup” for that contact (refer to Section 8.4, “Output Contact Setup”).
(4) Changes the analog output status to the one set in “Output hold setting” (refer to Section 8.2, “Output Hold Setting”).

When the display shown in Figure 12.1 appears, pressing the error indication brings up a description of the error (Figure 12.2). The content of errors that are displayed include those shown in Table 12.1.

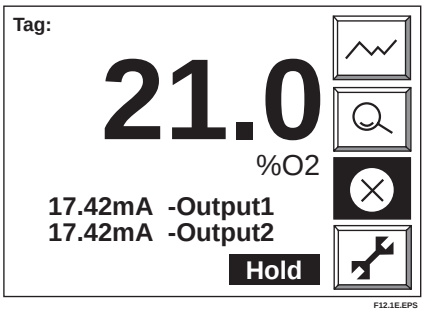

Figure 12.1

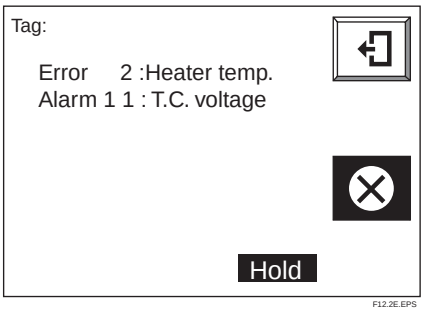

Figure 12.2

Table 12.1 Types of Errors and Reasons for Occurrence

Error	Type of error	Reason for Occurrence
Error-1	Cell voltage failure	The cell (sensor) voltage signal input to the converter falls below -50 mV.
Error-2	Heater temperature failure	The heater temperature does not rise during warm-up, or it falls below 730 °C or exceeds 780 °C after warm-upis completed.
Error-3	A/D converter failure	The A/D converter fails in the internal electrical circuit in the converter.
Error-4	Memory failure	Data properly are not written into memory in the internal electrical circuit in the converter.

T12.1E.EPS

12.1.2 Measures to Take When an Error Occurs

12.1.2.1 Error-1: Cell Voltage Failure

Error-1 occurs when the cell (sensor) voltage input to the converter falls below -50 mV (corresponding to about 200% O_2). The following are considered to be the causes for the cell voltage falling below -50 mV:

(1) Poor contact in terminal connections between the converter and detector
(2) Breakage in wiring cable between the converter and the detector
(3) Damage or deterioration of the sensor assembly
(4) Continuity failure between the sensor assembly electrode and the contact
(5) Wiring failure inside the detector
(6) Abnormality in electrical circuits in the converter

<Locating the failure and countermeasures>

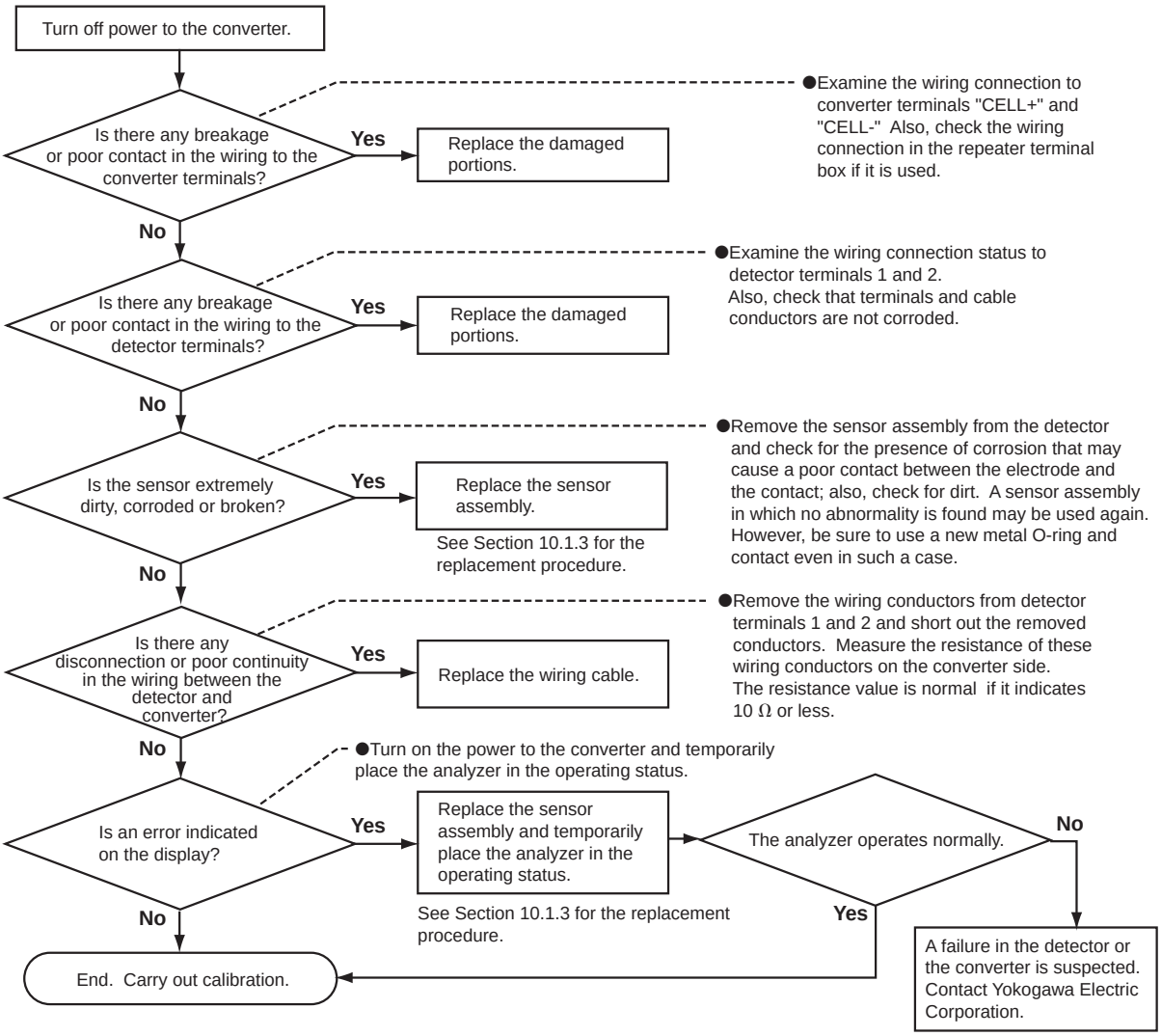

F12.1.2E.EPS

12.1.2.2 Error-2: Heater Temperature Failure

This error occurs if the detector heater temperature does not rise during warm-up, or if the temperature falls below 730° C or exceeds 780° C after warm-up is completed. In addition, when error-2 occurs, alarm 10 (cold junction temperature alarm) or alarm 11 (thermocouple voltage alarm) may be generated at the same time. Be sure to press the error indication to get a description of the error and confirm whether or not these alarms are being generated simultaneously.

If Alarm 10 is generated, a failure in the cold junction system is suspected. In this case, follow the procedure according to troubleshooting for alarm 10 in Section 12.2.2.5.

If Alarm 11 is generated, a failure in the thermocouple system located in the detector heater is suspected. In this case, follow the procedure according to troubleshooting for Alarm 11 in Section 12.2.2.6

Causes considered for cases where Error-2 occurs independently are shown below.

(1) Faulty heater in the detector (heater wire breakage)
(2) Faulty thermocouple in the detector
(3) Faulty cold junction sensor located at the detector terminal block.
(4) Failure in electrical circuits inside the converter

<Locating cause of failure, and countermeasures>

(1) Turn off power to the converter.
(2) Remove the cable from terminals 7 and 8 of the detector and measure the resistance value between these terminals. The heater unit will be normal if the resistance is lower than about 90Ω. If the resistance value is higher, failure of the heater unit is suspected. In this case, replace the heater unit (refer to Section 11.1.3, “Replacement of the Heater Unit”). In addition, check that the wiring resistance between the converter and detector is 10Ω or less.
(3) Remove the wiring from terminals 3 and 4 of the detector and measure the resistance value between these terminals. The thermocouple will be considered normal if the resistance value is 5Ω or less. If the value is higher than 5Ω, it may indicate thermocouple wire breakage or a state in which the thermocouple wire is about to break. In this case, replace the heater unit (refer to Section 11.1.3, “Replacement of the Heater Unit”). Also, check that the wiring resistance between the converter and detector is 10Ω or less.

CAUTION

- Measure the thermocouple resistance value after the difference between the detector tip temperature and the ambient temperature decreases to 50° C or less. If the thermocouple voltage is large, accurate measurement cannot be achieved.

12.1.2.3 Error-3: A/D Converter Failure/Error-4: Writing-to-memory Failure

• A/D Converter Failure

It is suspected that a failure has occurred in the A/D converter mounted in the electrical circuits inside the converter.

• Writing-to memory Failure

It is suspected that a failure has occurred in an operation writing to the memory (EEPROM) mounted in the electrical circuits inside the converter.

<Locating the failure, and coutermeasures>

Turn off the power to the converter once and then restart the converter. If the converter operates normally after restarting, an error might have occurred due to a temporary drop in the voltage (falling below 85 V, the least amount of voltage required to operate the converter) or a malfunction of the electrical circuits affected by noise. Check whether or not there is a failure in the power supply system or whether the converter and detector are securely grounded.

If the error occurs again after restarting, a failure in the electrical circuits is suspected. Consult the service personnel at Yokogawa Electric Corporation.

12.2 Displays and Measures to Take When Alarms are Generated

12.2.1 What is an Alarm?

When an alarm is generated, the alarm indication blinks in the display to notify of the alarm (Figure 12.3). Pressing the alarm indication displays a description of the alarm. Alarms include those shown in Table 12.2.

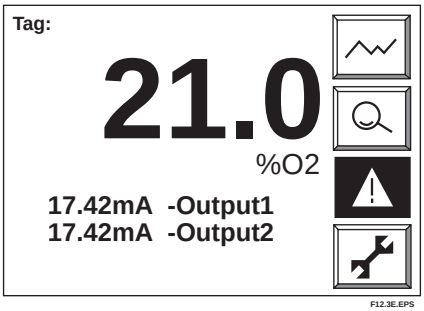

Figure 12.3

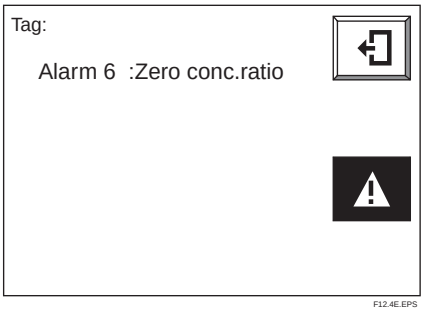

Figure 12.4

Table 12.2 Types of Alarms and Reasons for Occurrence

Alarm	Type of alarm	Reason for occurrence
Alarm 1	Oxygen concentration alarm	Generated when oxygen concentration to be measured exceeds or falls below the set alarm points (refer to Section 8.3, "Setting Oxygen Concentration Alarms").
Alarm 6	Zero-point calibration coefficient alarm	Generated when the zero correction factor is out of the range of 100 ± 30% in automatic and semiautomatic calibration (refer to Section 9.1.3, "Compensation").
Alarm 7	Span-point calibration coefficient alarm	Generated when the span correction factor is out of the range of 0 ± 18% in automatic and semiautomatic calibration (refer to Section 9.1.3, "Compensation").
Alarm 8	EMF stabilization time-up	Generated when the cell (sensor) voltage is not stabilized even after the calibration time is up in automatic and semiautomatic calibration.
Alarm 10	Cold junction temperature alarm	Generated when temperature of the cold junction placed in the detector terminal box exceeds 155°C or falls below -25°C.
Alarm 11	Thermocouple voltage alarm	Generated when thermocouple voltage exceeds 42.1 mV (about 1020°C) or falls below -5 mV (about -170°C).

T12.2E.EPS

If an alarm is generated, such measures as turning off the heater power are not carried out. The alarm is released when the cause for the alarm is eliminated. However, Alarm 10 and/or Alarm 11 may be generated at the same time as Error-2 (heater temperature error). In such a case, the measure taken for this error has priority.

If the converter power is turned off after an alarm is generated and restarted before the cause of the alarm has been eliminated, the alarm will be generated again. However, Alarms 6, 7, and 8 (alarms related to calibration) are not generated unless calibration is executed.

12.2.2 Measures Taken When Alarms are Generated

12.2.2.1 Alarm 1: Oxygen Concentration Alarm

This alarm is generated when a measured value exceeds an alarm set point or falls below it. For details on the oxygen concentration alarm, see Section 8.3, “Setting Oxygen Concentration Alarms,” in the chapter on operation.

12.2.2.2 Alarm 6: Zero-point Calibration Coefficient Alarm

In automatic or semiautomatic calibration, this alarm is generated when the zero correction factor is out of the range of 100 ± 30% (refer to Section 9.1.3, “Compensation”). The following can be considered the causes for this:

(1) The zero-gas oxygen concentration does not agree with the value of the zero-gas concentration set “Calibration Setup.” Otherwise, the span gas is used as the zero gas.
(2) The zero-gas flow is out of the specified flow (600 mL/min ±60 mL/min).
(3) The sensor assembly is damaged and so cell voltage is not normal.

<Locating cause of failure, and countermeasures>

(1) Confirm the following and carry out calibration again: If the items are not within their proper states, correct them.
   a. If the indication for “Zero gas conc.” is selected in “Calibration setup,” the set point should agree with the concentration of zero gas actually used.
   b. The calibration gas tubing should be constructed so that the zero gas does not leak.
(2) If no alarm is generated as a result of carrying out re-calibration, it is suspected that improper calibration conditions were the cause of the alarm in the preceding calibration. In this case, no specific restoration is necessary.
(3) If an alarm is generated again as a result of carrying out re-calibration, deterioration of or damage to the sensor assembly is suspected as the cause of the alarm. Replacement of the cell with a new one is necessary. However, before replacement, carry out the following:
   Check the cell voltages when passing the zero gas and span gas.
   a. Display the detailed data display by pressing the detail display key in the basic panel display.
   b. When the ▼ key is pressed once, the cell voltage should be indicated on the top line (Figure 12.5).
   c. Check whether or not the value of the displayed cell voltage is very different from the theoretical value at each oxygen concentration. Confirm the theoreti cal values of the cell voltage in Table 12.3. Although it cannot be generally specified as to what extent the difference from the theoretical value is allowed, consider it to be approximately ±10 mV.

Table 12.3 Oxygen Concentration and Cell Voltage

Oxygen concentration (%O_2)	Cell voltage (mV)
1 %	67.1
21%	0

T12.3E.EPS

(4) Confirm whether deterioration of or damage to the sensor assembly that caused the alarm has occurred abruptly during the current calibration in the following procedure:
   a. Call up the detailed data display.
   b. Display “Calibration time history” by pressing the ▼ key (Figure 12.6). Since the ten previous span-correction factor and zero-correction factor values can be checked in this display, changes in deterioration of the sensor can be seen.

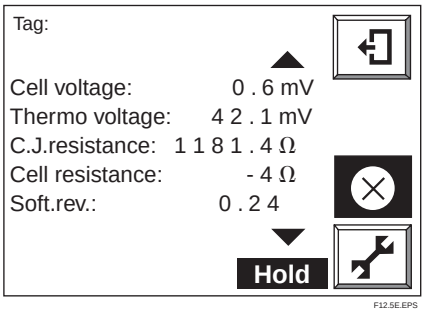

Figure 12.5 Detailed Data Display

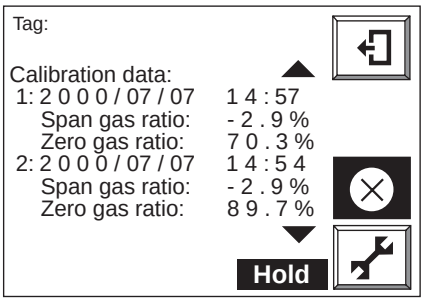

Figure 12.6 Calibration History

(5) If deterioration of the sensor assembly has occurred abruptly, it may show that the check valve, which prevents moisture in the furnace from getting into the calibration gas tubing, has failed. If the gas in the furnace gets into the calibration gas tubing, it condenses and remains in the gas tubing as condensate. The sensor assembly is considered to be broken for the reason that the condensate is blown into the sensor assembly by the calibration gas during calibration and so the cell cools quickly.

(6) If the sensor assembly has been gradually deteriorating, check the sensor assembly status in the following procedure:
   a. Display “Cell resistance” by pressing the ▼ key. A new cell will show a cell resistance value of 200Ω or less. On the other hand, a cell (sensor) that is approaching the end of its service life will show a resistance value of 3 to 10 kΩ.
   b. Display “Cell robustness” by pressing the ▼ key. A good cell (sensor) will show “Life > 1 year” (Figure 12.7).

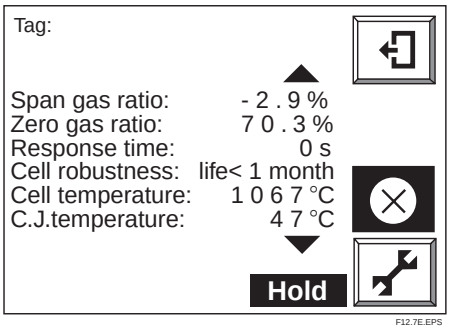

Figure 12.7

12.2.2.3 Alarm 7: Span-point Calibration Coefficient Alarm

In automatic or semiautomatic calibration, this alarm is generated when the span correction factor is out of the range of 0 ± 18% (refer to Section 9.1.3, “Compensation”). The following are suspected as the cause:

(1) The oxygen concentration of the span gas does not agree with the value of the span gas set “Calibration setup.”

(2) The flow of the span gas is out of the specified flow value (600 mL/min ±60 mL/min).

(3) The sensor assembly is damaged and the cell voltage is abnormal.

<Locating cause of failure, and countermeasures>

(1) Confirm the following and carry out calibration again: If the items are not within their proper states, correct them.
   a. If the display "Span gas conc." is selected in "Calibration setup," the set point should agree with the concentration of span gas actually used.
   b. The calibration gas tubing should be constructed so that the span gas does not leak.

(2) If no alarm is generated as a result of carrying out re-calibration, it is suspected that improper calibration conditions were the cause of the alarm in the preceding calibration. In this case, no specific restoration is necessary.

(3) If an alarm is generated again as a result of carrying out re-calibration, deterioration of or damage to the cell (sensor) is suspected as the cause of the alarm. Replacement of the cell with a new one is necessary. However, before replacement, carry out the procedure described in step (3) and later of <Search for cause of failure and taking measure> in Section 12.2.2.2, "Alarm 6: Zero-point Calibration Coefficient Alarm."

12.2.2.4 Alarm 8: EMF Stabilization Time Over

This alarm is generated if the sensor (cell) voltage has not stabilized even after the calibration time is up for the reason that the calibration gas (zero gas or span gas) has not filled the sensor assembly of the detector.

<Cause of alarm>

(1) The flow of the calibration gas is less than normal (a specified flow of 600 mL/min ± 60 mL/min).

(2) The length or thickness of the calibration gas tubing has been changed (lengthened or thickened).

(3) The measuring gas flows toward the tip of the probe.

(4) The sensor (cell) response has deteriorated.

<Locating cause of failure, and countermeasures>

(1) Carry out calibration by passing the calibration gas at the specified flow (600 mL/min ± 60 mL/min) after checking that there is no leakage in the tubing.

(2) If calibration is carried out normally, perform a steady operation without changing the conditions. If the error occurs again, check whether or not the reason is applicable to the following and then replace the sensor assembly.

- A lot of dust and the like may be sticking to the tip of the detector probe. If dust is found, clean the probe (see Section 11.1.1).
  In addition, if an error occurs in calibration even after the sensor assembly is replaced, the influence of measured gas flow may be suspected. Do not let the measured gas flow toward the tip of the detector probe, for example, by changing the mounting position of the detector.

12.2.2.5 Alarm 10: Cold Junction Temperature Alarm

This alarm is generated when the temperature of the cold junction located at the terminal block of the detector falls below -25° C or exceeds 155° C. Check the following:

Display "C.J.Temperature" in the detailed data display. If "C.J.Temperature" is indicated as 200° C or -50° C, the following can be considered.

(1) Breakage of the cold junction signal wires between the converter and the detector, or the cable is not securely connected to the connecting terminals.

(2) The positive and negative poles of the cold junction signal wiring are shorted out in the wiring extension or at the connection terminals.

(3) A failure of the cold junction temperature sensor located at the detector terminal block occurred.
(4) A failure of the electrical circuits inside the converter occurred.
If "C.J.Temperature" exceeds 150° C or falls below -20° C, the following can be considered.
(1) The temperature of the detector terminal block is out of the operating temperature range (-20° C to 150° C).
(2) A failure of the cold junction temperature sensor located at the detector terminal block occurred.
(3) A failure of the electrical circuits inside the converter occurred.

<Locating cause of failure and countermeasures>
Before proceeding to the following troubleshooting procedure, examine whether or not the temperature of the detector terminal block is out of the operating temperature range. The operating temperature range varies with the type of detector. If the detector terminal block is out of its operating temperature range, take the measure to lower the temperature, such as situating it so that it is not subjected to radiant heat.

The case where the Model ZR22 Detector is used:
(1) Stop the power to the converter.
(2) Remove the wiring from terminals 5 and 6 of the detector and measure the resistance between these terminals. If the resistance value is out of the range of 1 to 1.6 kΩ, the cold junction temperature sensor is considered to be faulty. Replace that temperature sensor with a new one.
(3) If the resistance value is within the above range, the cold junction temperature sensor seems to be normal. Check whether or not the cable is broken or shorted out, and whether the cable is securely connected to the terminals. Also, check that the resistance of the wiring between the converter and detector is 10Ω or less.
(4) If there is no failure in the wiring, the electrical circuits inside the converter may possibly fail. Contact the service personnel at Yokogawa Electric Corporation.

The case where the Model ZO21D Detector is used:
(1) Without stopping the power to the converter, remove the wiring from terminals 5 and 6 of the detector and measure the voltage between these terminals. If the voltage between the terminals is out of the range of 0.4 to 0.7 V, the cold junction temperature sensor seems to be faulty. Replace the cold junction temperature sensor.
(2) If the voltage between the terminals is within the above range, the cold junction temperature sensor seems to be normal. Check whether or not the cable is broken or shorted out, and whether the cable is securely connected to the terminals. Also, check that the resistance of the wiring between the converter and detector is 10Ω or less.
(3) If there is no failure in the wiring, the electrical circuits inside the converter may possibly fail. Contact the service personnel at Yokogawa Electric Corporation.

CAUTION

- The operating temperature range of the Model ZO21D Detector is -10° C to 80° C (except for the high-temperature detector ZO21D-H). Since a cold junction temperature alarm for this analyzer is not generated until the temperature exceeds 155° C, if the Model ZO21D Detector is used, be careful in controlling the ambient temperature of the terminal block.

12.2.2.6 Alarm 11: Thermocouple Voltage Alarm

This alarm is generated when the emf (voltage) of the thermocouple falls below -5 mV (about -170° C) or exceeds 42.1 mV (about 1020° C). Whenever Alarm 11 is generated, Error-2 (heater temperature failure) occurs.

(1) Breakage of the heater thermocouple signal wire between the converter and the detector occurred, or the cable is not securely connected to the connecting terminals.
(2) The positive and negative poles of the heater thermocouple signal wiring are shorted out in the wiring extension or at the connection terminals.
(3) A failure of the thermocouple at the detector heater assembly occurred.
(4) A failure of the electrical circuits inside the converter occurred.

<Locating cause of failure, and countermeasures>

(1) Stop the power to the converter.
(2) Remove the wiring from terminals 3 and 4 of the detector and measure the resistance between these terminals. If the resistance value is 5Ω or less, the thermocouple seems to be normal. If it is higher than 5Ω, it may indicate the possibility that the thermocouple has broken or is about to break. In this case, replace the heater unit (refer to Section 11.1.3, "Replacement of the Heater Unit").

CAUTION

- Measure the thermocouple resistance value after the difference between the detector tip temperature and ambient temperature falls to 50° C or less. If the thermocouple voltage is large, accurate measurement cannot be achieved.

(3) If the thermocouple is normal, check whether or not the wiring cable is broken or shorted out, and also whether the wiring cable is securely connected to the terminals. Also check that the wiring resistance between the converter and the detector is 10Ω or less.
(4) If there is no failure in the wiring, the electrical circuits inside the converter may possibly fail. Contact the service personnel at Yokogawa Electric Corporation.

12.3 Countermeasures When Measured Value Shows Error

The causes that the measured value shows an abnormal value is not always due to instrument failures. There are rather many cases where the causes are those that measuring gas itself is in abnormal state or external causes exist, which disturb the instrument operation. In this section, causes of and measures against the cases where measured values show the following phenomena will be described.

(1) The measured value is higher than the true value.
(2) The measured value is lower than the true value.
(3) The measured value sometimes shows abnormal values.

12.3.1 Measured Value Higher Than True Value

<Causes and Countermeasures>

(1) The measuring gas pressure becomes higher.

The measured oxygen concentration value X (vol% O_2) is expressed as shown below, when the measuring gas pressure is higher than that in calibration by Δp (kPa).

$X=Y\ [\ 1+ (\Delta p/101.30)\ ]$

where Y: Measured oxygen concentration value at the same pressure as in calibration (vol% O_2).

Where an increment of the measured value by pressure change cannot be neglected, measures must be taken.

Investigate the following points to perform improvement available in each process.

- Is improvement in facility's aspect available so that pressure change does not occur?
- Is performing calibration available under the average measuring gas pressure (internal pressure of a furnace)?

(2) Moisture content in a reference gas changes (increases) greatly.

If air at the detector installation site is used for the reference gas, large change of moisture in the air may cause an error in measured oxygen concentration value (vol% O_2).

When this error is not ignored, use a gas in which moisture content is constant such as instrument air in almost dry condition as a reference gas.

In addition, change of moisture content in exhaust gas after combustion is also considered as a cause of error. However, normally this error is negligible.

(3) Calibration gas (span gas) is mixing into the detector due to leakage.

If the span gas is mixing into the detector due to leakage as a result of failure of the valve provided in the calibration gas tubing system, the measured value shows a value a little higher than normal.

Check valves (needle valves, check valves, solenoid valves for automatic calibration, etc.) in the calibration gas tubing system for leakage. For manual valves, check them after confirming that they are in fully closed states. In addition, check the tubing joints for leakage.

(4) The reference gas is mixing into the measuring gas and vice versa.

Since the difference between oxygen partial pressures on the sensor anode and cathode sides becomes smaller, the measured value shows a higher value.

An error which does not appear as the Error-1 may occur in the sensor. Measured gas and/or the reference gas may be leaking. Visually inspect the sensor. If any crack is found, replace the sensor assembly with a new one.

(Note) Data such as cell robustness displayed in the detailed data display should also be used for deciding sensor quality as references.

12.3.2 Measured Value Lower Than True Value

<Causes and Countermeasures>

(1) The measuring gas pressure becomes lower.
Where an increment of the measured value due to pressure change cannot be neglected, take measures referring to subsection 12.3.1 (1).

(2) Moisture content in a reference gas changes (decreases) greatly.
If air at the detector installation site is used for the reference gas, large change of moisture content in the air may cause an error in measured oxygen concentration value (vol% O_2).
When this error is not ignored, use a gas in which moisture content is constant such as instrument air in almost dry condition as a reference gas.
In addition, change of moisture content in exhaust gas after combustion is also considered as a cause of error. However, normally this error is negligible.

(3) Calibration gas (zero gas) is mixed into the detector due to leakage.
If the zero gas is mixed into the detector due to leakage as a result of failure of the valve provided in the calibration gas tubing system, the measured value shows a value a little lower than normal.
Check valves (needle valves, check valves, solenoid valves for automatic calibration, etc.) in the calibration gas tubing system for leakage. For manual valves, check them after confirming that they are in fully closed states.

(4) Conbustible components exist in the measured gas. If combustible components exist in the measured gas, they burn in the sensor and thus oxygen concentartion decreses. Check that there are no combustible components.

(5) Temperature of the detector cell reaches 750 ° C or more.

12.3.3 Measurements Sometimes Show Abnormal Values

<Cause and Countermeasures>

(1) Noise may be mixing in with the converter from the detector output wiring.
Check whether the converter and detector are securely grounded.
Check whether or not the signal wiring is laid along other power cords.

(2) The converter may be affected by noise from the power supply.
Check whether or not the converter power is supplied from the same outlet, switch, or breaker as other power machines and equipment.

(3) Poor wiring contact
If there is poor contact in the wiring, the sensor voltage or thermocouple emf (voltage) may vary due to vibration or other factors.
Check whether or not there are loose points in the wiring connections or loose crimping (caulking) at the crimp-on terminal lugs.

(4) Combustible components in the measured gas may be getting into the sensor.
If the combustible components show signs of dust, the abnormality may be improved by mounting a dust-removing filter K9471UA.

(5) There may be a crack in the sensor or leakage at the sensor-mounting portion.
If the indication of concentration varies in synchronization with the pressure change in the furnace, check whether or not there is a crack in the sensor or whether the sensor flange is sticking tightly to the probe-attaching face with the metal O-ring squeezed.

(6) There may be leakage in the calibration gas tubing
In the case of a negative furnace inner pressure, if the indication of concentration varies with the pressure change in the furnace, check whether or not there is leakage in the calibration gas tubing.

Customer Maintenance Parts List

Model ZR22G
Zirconia Oxygen Analyzer, Detector
(Separate type)

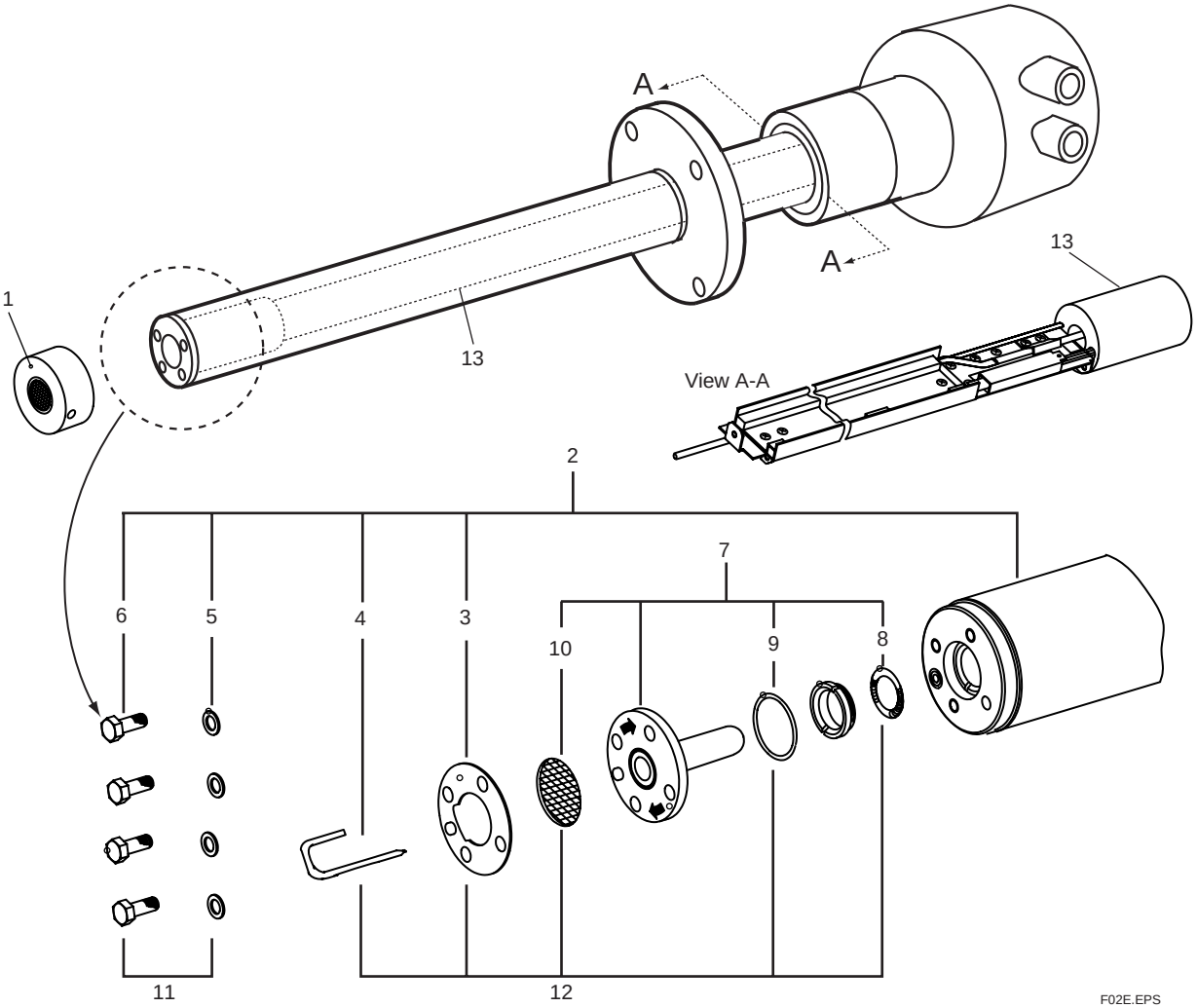

F02E.EPS

Item	Parts No.	Qty.	Description
1	K9471UA	1	Dust Filter (Option)
2	----------	1	Detector Assembly
3	E7042BR	1	Plate
4	E7042BQ	1	Pipe
	K9473AM	1	Pipe for Option code "/C"
5	E7042DW	4	Washer (SUS316 stainless steel)
6	G7109YC	4	Bolt (M5x12, SUS316 stainless steel)
	K9470BK	4	Bolt (M5x12, inconel) for Option code "/C"
7	E7042UD	1	Cell Assembly
8	E7042BS	1	Contact
9	K9470BJ	1	Metal O-ring
10	E7042AY	1	Filter Assembly
11	—		Bolts and Washeres
	K9470ZF	1	G7109YC ×4 + E7042DW ×4
	K9470ZG	1	K9470BK ×4 + E7042DW ×4 for Option code "/C"
12	—		Calibration Tube Assembly
	K9470ZH	1	Cal. Gas Tube Assembly
	K9470ZJ	1	Cal. Gas Tube Assembly for Option code "/C"
13	ZR22A-□□□-□A	1	Heater Assembly

All Rights Reserved, Copyright © 2000, Yokogawa Electric Corporation.
Subject to change without notice.

CMPL 11M12A01-02E
1st Edition : Aug.2000(YK)
4th Edition : Aug.2001(YK)

Customer Maintenance Parts List

Model ZR402G
Zirconia Oxygen Analyzer/High Temperature Humidity Analyzer,Converter

Hood for ZR402G

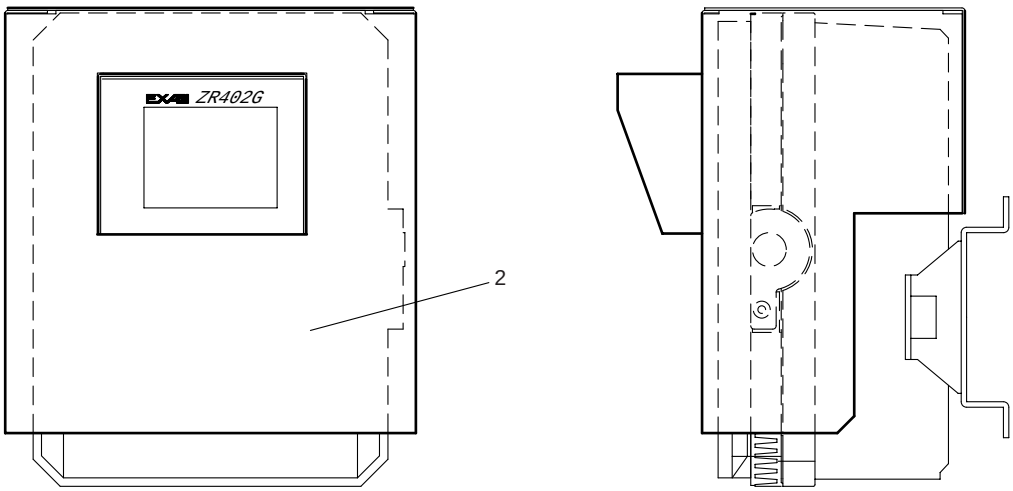

Item	Parts No.	Qty.	Description
1	A1113EF	1	Fuse (3.15A)
2	K9471UF	1	Hood

All Rights Reserved, Copyright © 2000, Yokogawa Electric Corporation.
CMPL 11M12C01-01E
2nd Edition : Feb. 2001 (YK)

Customer Maintenance Parts List

Model ZR40H
Separate type Zirconia Oxygen Analyzer/
High Temperature Humidity Analyzer,
Automatic Calibration Unit

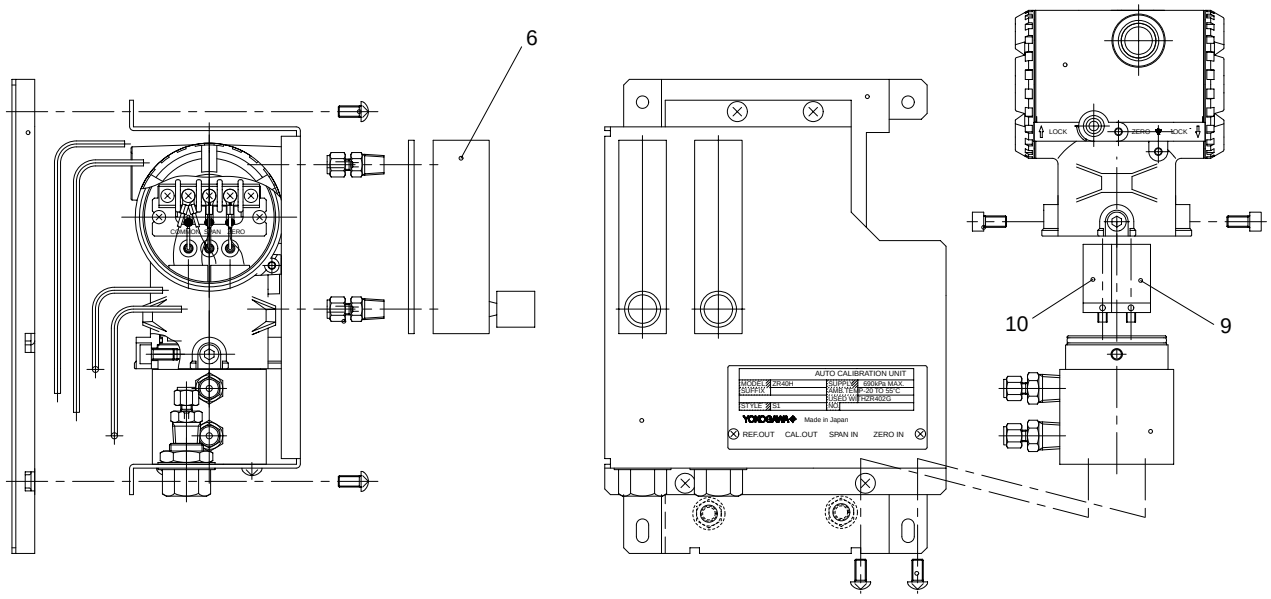

Item	Part No.	Qty	Description
6	K9473XC	1	Flowmeter

All Rights Reserved, Copyright © 2000, Yokogawa Electric Corporation.

CMPL 11M12A01-11E
1st Edition : Dec. 2000 (YK)
2nd Edition : Feb. 2001 (YK)

Customer Maintenance Parts List

E7046EC/E7046EN
Zirconia Oxygen Analyzer
Auxiliary Ejector (for Model ZO21P-H)

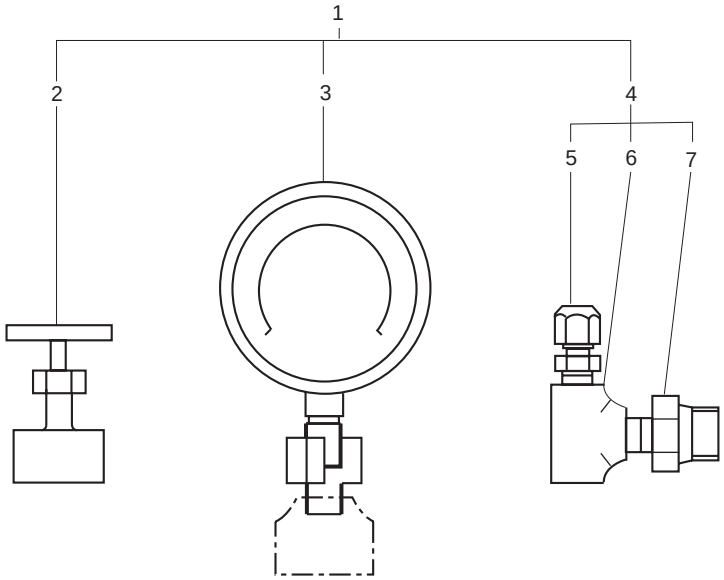

Item	Parts No.	Qty.	Description
1	E7046EC	1	Auxiliary Ejector, Connection Rc1/4
	E7046EN	1	Auxiliary Ejector, Connection 1/4NPT
2	L9852CB	1	Needle Valve, Connection Rc1/4
	G7016XH	1	Needle Valve, Connection 1/4NPT
3	E7046EK	1	Pressure Gauge, Connection Rc1/4
	E7046EV	1	Pressure Gauge, Connection 1/4NPT
4	E7046ED	1	Ejector Assembly, Connection Rc1/4
	E7046EP	1	Ejector Assembly, Connection 1/4NPT
5	E7046EF	1	Connector, Connection Rc1/4
	E7046ER	1	Connector, Connection 1/4NPT
6	G7031XA	1	Ejector, Connection Rc1/4
7	E7046EJ	1	Ejector, Connection R1/4

YOKOGAWA
Yokogawa Electric Corporation

All Rights Reserved, Copyright © 2000, Yokogawa Electric Corporation.

CMPL 11M03B01-05E
1st Edition : Dec. 2000 (YK)
6th Edition : Sept. 2001 (YK)

Customer Maintenance Parts List

Model ZO21P-H
Zirconia Oxygen Analyzer
High Temperature Probe Adaptor

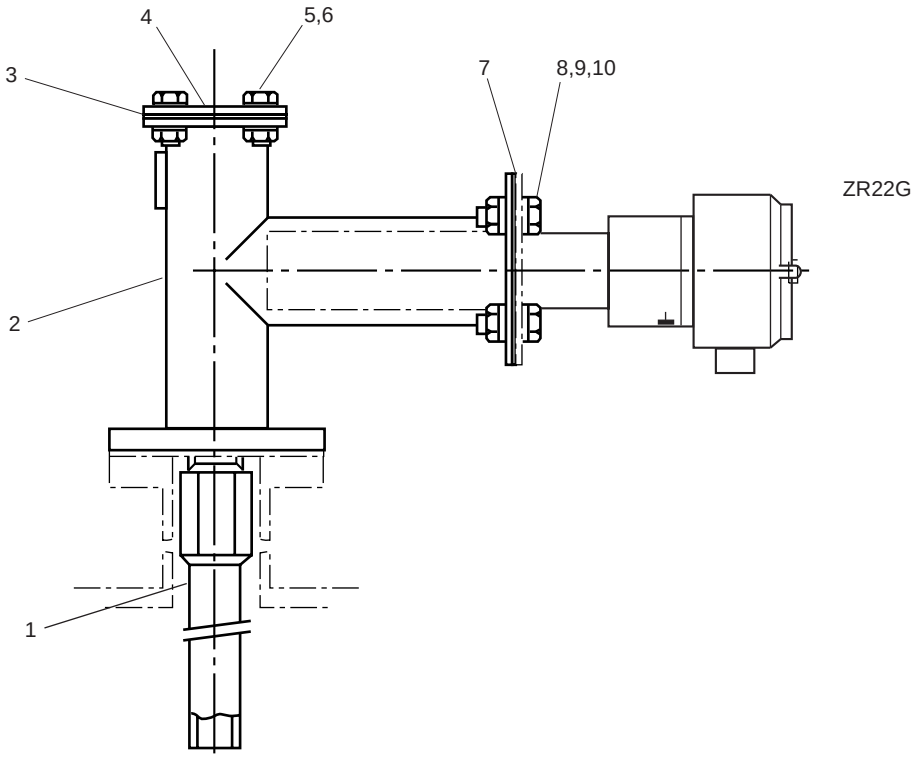

Item	Parts No.	Qty.	Description
1	E7046AL	1	Probe (SiC, L=1.0m)
	E7046BB	1	Probe (SiC, L=1.5m)
	E7046AP	1	Probe (SUS, L=1.0m)
	E7046AQ	1	Probe (SUS, L=1.5m)
2	E7046AD	1	Probe Adaptor (for JIS 5K-50-FF)
	E7046CB	1	Probe Adaptor (for ANSI CLASS150-4-RF)
	—	1	Probe Adaptor (for DIN PN10-DN50-A)
	—	1	Probe Adaptor (for JIS 10K-100-FF)
	—	1	Probe Adaptor (for JIS 10K-80-FF)
	—	1	Probe Adaptor (for JIS 10K-65-FF)
	—	1	Probe Adaptor (for ANSI CLASS150-3-RF)
	—	1	Probe Adaptor (for ANSI CLASS150-2 1/2-RF)
	—	1	Probe Adaptor (for JPI CLASS150-4-RF)
	—	1	Probe Adaptor (for JPI CLASS150-3-RF)
3	E7046AC	1	Gasket
4	E7046AB	1	Plate
5	G7030YC	4	Bolt
6	Y9800WU	8	Washer
7	G7073XL	1	Gasket
8	Y9630RU	4	Bolt
9	Y9121BU	4	Nut
10	Y9120WU	4	Washer

All Rights Reserved, Copyright © 2000, Yokogawa Electric Corporation.
CMPL 11M03B01-10E
1st Edition : Dec. 2000 (YK)
5th Edition :Sept. 2001 (YK)

Customer Maintenance Parts List

Model ZO21S
Zirconia Oxygen Analyzer/ High Temperature Humidity Analyzer, Standard Gas Unit

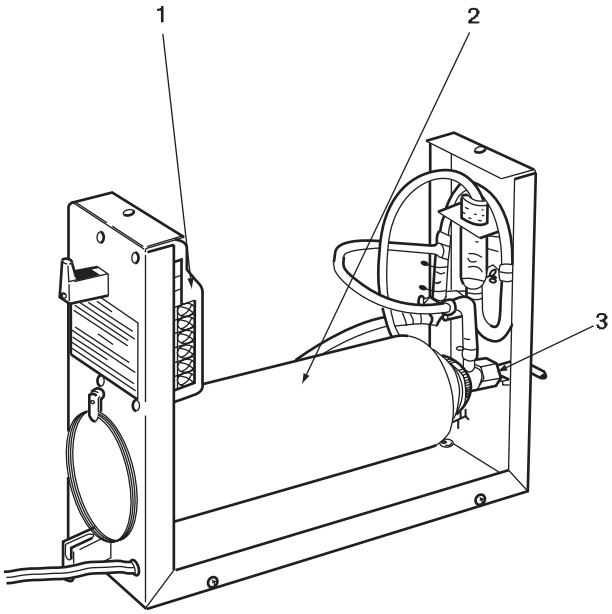

Item	Part No.	Qty	Description
1	@ @-	1	Pump (see Table 1)
2	E7050BA	1	Zero Gas Cylinder (x6 pcs)
3	E7050BJ	1	Needle Valve

Table 1

Power	Pump
AC 100V 110 115	E7050AU
AC 200V 220 240	E7050AV

© Copyright 2000(YK). 3rd Edition: Dec. 2000 (YK)

Revision Record

Manual Title : Model ZR22G, ZR402G Separate type Zirconia Oxygen Analyzer
Manual Number : IM 11M12A01-02E

Edition	Date	Remark (s)
1st	Oct. 2000	Newly published
2nd	Mar. 2001	Revised section 1.1.3 “System 3” explanation changed 2.2 In “General-use Separate-type Detector”, some MS codes changed 2.4 Corrected errors in ZR402G External Dimensions figure, changed MS Code table 2.5.1 Changed reference air pressure where check valves is used, style changed of ZA8F 2.5.2 Added detail about ZR40H Automatic Calibration Unit 2.7.2 Added items to figure of Auxiliary Ejector for High Temperature 3.2.2 Corrected Figure 3.6 Panel Cutout, Figure 3.13 Mounting Holes 3.5 Added to 3.5 Installation of ZR40H Automatic Calibration Unit 6.1 Added Filter to 6.1 ZR22G Detector 6.3 Added Names and Functions to 6.3 ZR40H Automatic Calibration Unit 7.2 Changed reference air pressure where check valve is used 7.12.2.1 Changed reference air pressure where check valve is used 10.1.1.6 Corrected Table 10.1 10.6.1 Changed reference air pressure where check valve is used 11.1 Added Filter to 11.1 Inspection and Maintenance of the Detector Added Filter to CMPL11M12A01-02E, and added ZR40H Automatic Calibration Unit to CMPL11M12A01-11E
3rd	Sept. 2001	Revised section 1.2 Model ZR22A Heater Assembly added 2.5.1 ZA8F Flow Setting Unit error corrected 2.7.9 Model ZR22A Heater Assembly added 8.5.1 Table 8.7 Input Contact Functions changed 10.1.5 “French” added to Language Selection 11.1.3 Reference document added to Replacement of the Heater Unit Heater Assembly added to CMPL 11M12A01-02E CMPL11M03B01-05E revised to 6th Edtion, some part No. changed. CMPL11M03B01-10E revised to 5th Edtion, some part deleted.