SIEMENS

7221

Pressure Switches QPLx5…

The pressure switches are used for monitoring gas or air pressures.
When the pressure falls below or exceeds the adjusted switching point, the respective electrical circuit will be opened or changes over.

The QPLx5... and this Data Sheet are intended for use by OEMs which integrate the pressure switches in their products.

Use

- For the supervision of air or gas pressures in gas trains of gas-fired equipment (gas burners)
- The QPLx5... are suitable as pressure switches for minimum or maximum pressure
- Adjustable working pressure range up to 500 mbar
- Able for a permanent operation pressure up to 690 mbar
- Suited for gases of gas families 1, 2 and 3 and other neutral gaseous media

Warning notes

To avoid injury to persons, damage to property or the environment, the following warning notes should be observed!

Do not open, interfere with or modify the pressure switch!

- All activities (mounting, installation and service work, etc.) must be performed by qualified staff
- Before making any wiring changes in the connection area of the switch, completely isolate the equipment from the mains supply (all-polar disconnection)
- Fall or shock can adversely affect the safety functions. Such units must not be put into operation, even if they do not exhibit any damage
- Do not use the pressure switch in inflammable or explosive gas atmospheres

Engineering notes

Setting the switching point

To set the required switching point, remove the cover from the pressure switch and turn the setting knob clockwise to increase the set value, or counterclockwise to decrease it (see scale under «Dimensions»). Replace the cover and secure it to prevent tampering.

Mounting notes

- Ensure that the relevant national safety regulations are complied with
- By check piping connections ensure that there are no leaks
- The pressure switch can be mounted either horizontally or vertically, but not in a suspended position (scale must not pointing downward)
- The pressure switch can be connected via a ¼“ thread or O-ring, depending on the type of switch
- Refer also to following Mounting Instructions: M7221 → 74 319 0551 0

Connection via ¼“ (ISO) thread

QPL25…

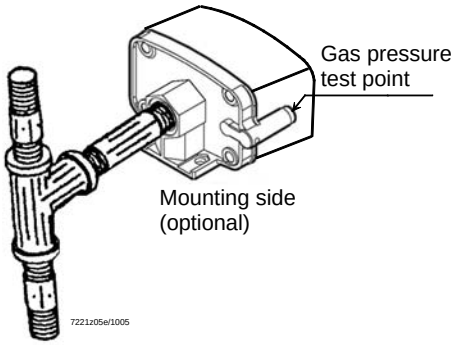

Connection via O-ring

QPL15…

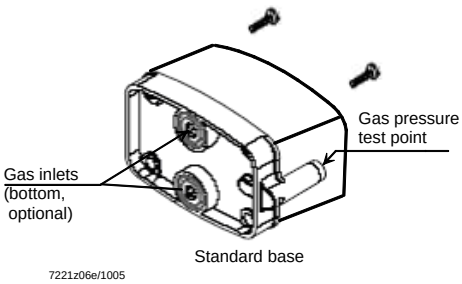

O-ring and self-forming screws are included in delivery.

Standards and certificates

Conformity to EEC directives

- Electromagnetic compatibility EMC (immunity)	89 / 336 / EEC
- Directive for gas-fired appliances	90 / 396 / EEC
- Pressure sensing devices for gas burners and gas-fired appliances	EN 1854 (CE 0085 BR 0021)

ISO 9001: 2000
Cert. 00739

ISO 14001: 2004
Cert. 38233

Disposal notes

The unit contains electrical and electronic components and must not be disposed of together with domestic waste.
Local and currently valid legislation must be observed.

Mechanical design

- Housing made of durable plastic with die-cast aluminium base
- Adjustable switching point
- Automatic reset

The switching point (setpoint) of the pressure switch is to be set with the adjusting knob located under the securing cover. The pressure switch comes calibrated and has been checked for leaks.

Type summary

When ordering, please give type reference according to «Type summary».

Pressure switches with automatic reset:

Pressure range	¼“ connection	O-ring connection
0,7…3 mbar	QPL25.003	QPL15.003
2…10 mbar	QPL25.010	QPL15.010
5…50 mbar	QPL25.050	QPL15.050
5…150 mbar	QPL25.150	QPL15.150
100…500 mbar	QPL25.500	QPL15.500

Accessories

Contact box **AGA65**
- Plug-in connector according to DIN EN 175301-803-A
- Triple pole + ⏚
- 4.5...11 mm dia. / max. 1.5 mm²

Technical data

General data	Switching voltage	DC / ACeff max. 250 V
	Switching current	ACeff max. 6 A at cosφ 1 AC eff. max. 2 A at cosφ 0.5 AC eff. min. 20 mA DC max. 1 A DC min. 20 mA
	Adjustable operating pressure range	1.5... 500 mbar (different ranges, refer to «Type summary»)
	Operating pressure (short-time) pressure surge	max. 1,000 mbar for max. 30 s
	Operating pressure (continuously)	max. 690 mbar
	Weight	approx. 120 g
	Mounting position	horizontal or vertical, but not suspended
	Safety class	II to VDE 0631
	Degree of protection	IP54
	Switching pressure deviation	±15 %, referred to the setpoint (diaphragm in vertical position)
	Gas families	I, II, III

Typical hysteresis:

Type reference	Switching differential
QPL… < 3 mbar	0.3 mbar
QPL… < 10 mbar	0.5 mbar
QPL… < 50 mbar	1 mbar
QPL… > 100 mbar	5 mbar

Environmental conditions	**Storage**	DIN EN 60721-3-1
	Climatic conditions	class 1K3
	Mechanical conditions	class 1M2
	Temperature range	-20...+60 °C
	Humidity	< 95 % r.h.
	Transport	DIN EN 60 721-3-2
	Climatic conditions	class 2K2
	Mechanical conditions	class 2M2
	Temperature range	-40...+60 °C
	Humidity	< 95 % r.h.
	Operation	DIN EN 60 721-3-3
	Climatic conditions	class 3K5
	Mechanical conditions	class 3M2
	Temperature range	-20...+60 °C
	Humidity	< 95 % r.h.

Condensation, formation of ice and ingress of water are not permitted!

Connection diagram

Function when	**Pressure switch for minimum pressure** When the pressure falls below the set value, NO opens and NC closes	**Pressure switch for maximum pressure** When the pressure exceeds the set value, NC opens and NO closes

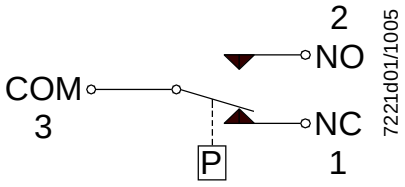

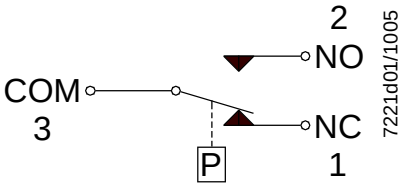

Connection via connector AGA65 according to DIN43650

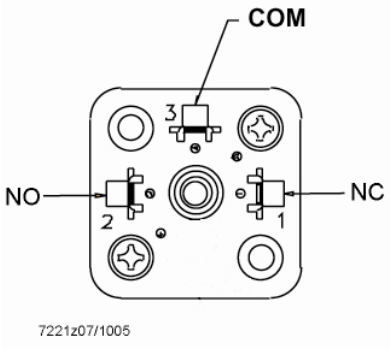

Connection examples

QPLx5… fitted to VGD20…4011 / VGD20.5011	QPLx5… fitted to VGD40…

Dimensions

Dimensions in mm

QPLx5…

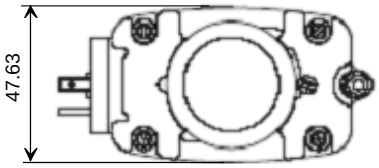

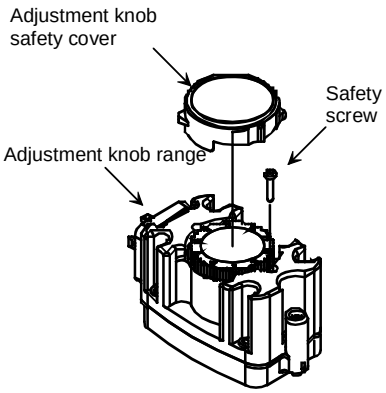

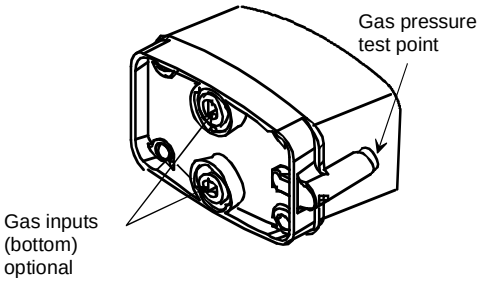

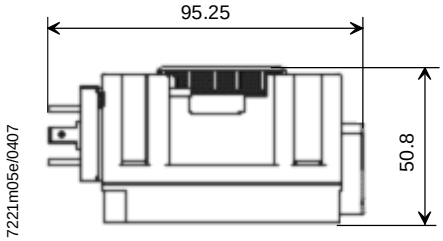

Note: Dimensions for reference only

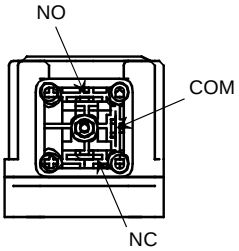

Switch contacts

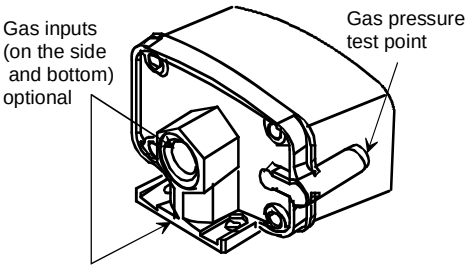

Mounting side (optional)

©2007 Siemens Building Technologies HVAC Products GmbH
Subject to change!