SIEMENS

7643

On / Off

SKP15...

On / Off
with constant pressure governor

SKP25... / SKL25…

On / Off
with differential pressure governor

SKP55...

On / Off
with ratio pressure governor

SKP75...

Actuators for Gas Valves

SKPx5... SKL25…

- **On / Off safety shutoff feature conforming to EN161 in connection with SKPx5… actuators and gas valves supplied by Siemens**
- **Damped opening (rapid closing)**
- **Very low power consumption**
- **Suitable for gases of gas families I...III**
- **Optionally with / without end switch (factory-set)**
- **Plug-in connection facility**
- **Electrical indication of operation**
- **Stroke indication**
- **Supplementary Data Sheets (refer to the Data Sheets on gas and air valves)**

The SKPx5... / SKL25… and this Data Sheet are intended for use by OEMs which integrate the actuators in their products.

Use

Modular concept

SKPx5... / SKL25... actuators are designed for use with the following types of valves:

Type of valve	Medium	Data Sheet
VGG... VGF... VGH...	Natural gas Gases of gas families I...III	N7636
VGD2... VGD4...	Natural gas Gases of gas families I...III	N7631
VRF... VRH...	Biogas (used with SKPx5..., on request)	N7633
VLF...	Hot air	N7637

Actuators SKPx5... in general

The combination of actuator and valve provides the following functions:
- Safety shutoff valve (SKP15...)
- Safety shutoff valve with gas pressure governor / controller (SKP25..., SKP55..., and SKP75...)

The electrohydraulic actuators together with the valves are designed for use with gases of gas families I...III and air. They are used primarily on gas-fired combustion plant. The actuators open slowly and close rapidly. They can be combined with any of the above mentioned valve types and nominal valve sizes. The actuator can be supplied with end switch (for indicating the fully closed position). For information about valve sizing, refer to the «Valve sizing chart» in the Data Sheet of the relevant valve.

SKP25...

The SKP25... operates with a gas pressure governor and controls the gas pressure according to the setpoint preselected with the setpoint spring or air pressure signal.

Its field of use are primarily forced draft gas burners
- with mechanical air / fuel ratio control (SKP25.0...)
- with electronic air / fuel ratio control (SKP25.0...)
- with 2-stage setpoint changeover (SKP25.2…)
- with zero governor (SKP25.3…)
- with constant pressure governor and electric adjustment of the setpoint spring (SKP25.7…)

SKL25...

The SKL25... actuators are of the same design as the SKP25…, but close more slowly (3…6 seconds).
The SKL25… do **not** conform to the standards for gas applications and, for this reason, are only suited for use with air.

SKP55...

The SKP55... operates with a differential gas pressure governor and controls a differential gas pressure according to a differential air pressure. The ratio of the differential pressures is 1-to-1 and constant across the entire air range.

Its field of use are predominantly
- combustion plant with combined heat recovery systems
- plant where pressure conditions in the burner and combustion chamber do not change in proportion to load changes
- burners with adjustable air / fuel mixing devices in the burner head
- plant with negative pressure levels on the gas or air side

SKP75...

The SKP75... operates as a gas pressure ratio controller and provides control of the gas pressure depending on the pressure of the combustion air, ensuring that the adjustable gas / air ratio remains constant across the entire load range.
Its field of use is primarily modulating forced draft gas burners.

Warning notes

To prevent injury to persons, damage to property or the environment, the following warning notes should be observed!

Do not open, interfere with or modify the actuators!

- All activities (mounting, installation and service work, etc.) must be performed by qualified staff
- Check to ensure that the impulse pipes are correctly fitted and tight (SKP25..., SKP55..., SKP75...)
- Fall or shock can adversely affect the safety functions. Such actuators must not be put into operation, even if they do not exhibit any damage
- Each time work has been carried out (mounting, installation, service work, etc.), check to ensure that wiring is in an orderly state and make the safety checks as described in «Commissioning notes»
- If mains voltage is fed to the end switch, protective earth must be connected to the actuator via the same plug (AGA65)
- Use of connectors conforming to DIN EN 175301-803-A is mandatory
- The connectors used must feature cable strain relief

SKP25.2...

- The magnet can reach high temperatures if activated for longer periods of time (risk of burns!)

- The SKPx5.xx1xx are supplied with the end switch factory-set

Design of the gas train

If the available gas pressure exceeds the maximum permissible operating pressure of the valve (VG... / VR...) / actuator (SKPx5...) (refer to the Data Sheet of the relevant valve), it must be lowered by an upstream pressure controller. The pressure switch for lack of gas must always be fitted upstream of the gas valve when used in connection with the actuator.

SKP25..., SKL25…, SKP55..., SKP75...

The impulse pipes must be installed such that the differential pressure can be acquired with no disturbance (unfavorable flow conditions). Pressure test points must not protrude and be flush with the inside diameter of the pipe or duct wall. The impulse lines to the governor / controller should be as short as possible, enabling the governor / controller to respond quickly should sudden load changes occur. The inside diameter of the impulse pipes must be a minimum of 6 mm.
In connection with the SKP25..., the 1/4“ nozzles on the outlet side of the VG... gas valves can be used as pressure test points (prerequisite: gas control pressure setpoint > 10 mbar).

SKP75...

- Installation of impulse pipes:
  In the case of unsafe combustion chamber pressure pipes (e.g. resulting from potential leaks). The setting must also be checked during operation without having the combustion chamber pipe connected, especially with respect to maximum burner capacity. The impulse pipes must be fitted such that the differential pressure can be acquired with no disturbance. With gas / air ratios > 3, the impulse pipes for the combustion air and the combustion chamber pressure must have an inside diameter of at least 8 mm. The impulse pipe for the combustion chamber pressure must be fitted such that the gases will cool down in the vicinity of the impulse pipe and condensing gases cannot enter the controller but will return to the combustion chamber.

  Recommendations:
  – The gas pressure should be acquired at a distance of 5 times the nominal pipe size downstream from the valve
  – Do not use the lateral test points on the valve body for picking up the pressure

- Considering the combustion chamber pressure:
  If the resistance value of the combustion chamber / heat exchanger / stack system is constant, the combustion chamber pressure changes in proportion to the gas and combustion air pressure as the burner’s output changes. In that case, the combustion chamber pressure need not be fed to the SKP75... as a disturbance variable. However, if the combustion chamber pressure does not change to the same extent as the gas and air pressure – as this is the case in plants with flue gas fan or modulating flue gas damper – the combustion chamber pressure must be fed to the SKP75... as a disturbance variable, enabling the controller to counteract.

Mounting notes

- Ensure that the relevant national safety regulations are complied with
- The quadratic arrangement of the fixing holes allows the actuator to be fitted in 4 different positions on the VG… valve, each step being 90° (depending on the type of VG... valve)
- The actuator can be mounted or replaced while the system is under pressure; sealing material is not required
- Follow the Mounting Instructions included with the actuators:
  - for SKPx5... M7643 74 319 0419 0
  - for NEMA-Kit for SKPx5... / VG... M7643.2 74 319 0421 0
  - for SKL25… M7643 74 319 0419 0
  - for SKP25.2… M7643.4 74 319 0552 0
  - for SKP25.7... M7643.3 4 319 1979 0

Actuators in general

- Electrical commissioning may only be performed when the actuator is fitted to the valve; otherwise, the actuator can be damaged
- Power is supplied and connection of the end switch is made directly via a connecting cable (conforming to DIN EN 175301-803-A)
- The end switch is factory-set
- The pump's stem must not be pulled out using the overstroke element since that part could become loose

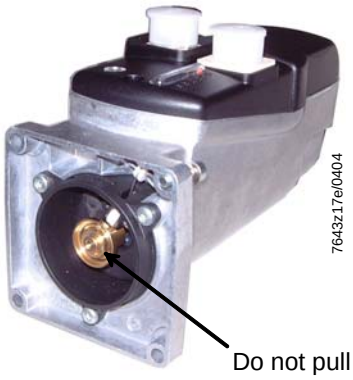

Functioning principle of 1-stage actuator SKP15... with safety shutoff feature

When power is applied, the pump will be activated and the control valve closed. Oil is now pumped from the chamber below the piston to the pressure chamber above the piston. The oil pressure causes the piston to move downward, thereby opening the valve – against the pressure of the closing spring. The pump remains energized until the closing command is given. When power is removed, or in the event of a power failure, the pump will be deactivated and the control valve opened so that the closing spring pushes the piston back. The return flow system is sized such that the counter-stroke required for reaching the fully closed position is completed within about 0.6 seconds.

SKP15... complete with valve

(Schematic drawing)

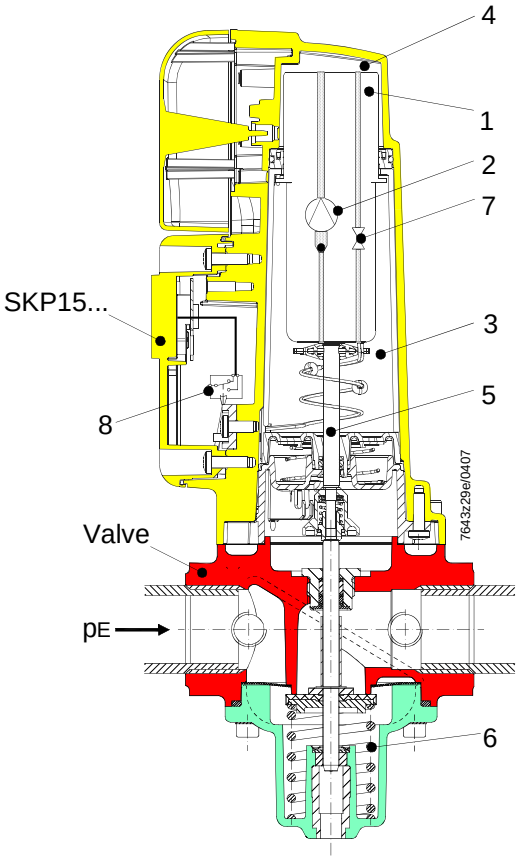

Legend

1	Piston
2	Oscillating pump
3	Oil reservoir
4	Pressure chamber
5	Stem
6	Closing spring
7	Control valve
8	End switch (optional)

SKP2..., SKP5... and SKP7...

The functioning principle (safety shutoff feature) is identical to that of the SKP15…, but with the help of their pneumatic governor, the SKP25…, SKP55… and SKP75… also control a bypass valve in the hydraulic circuit and thus the valve‘s opening position.

SKP25... complete with valve

(Schematic drawing)

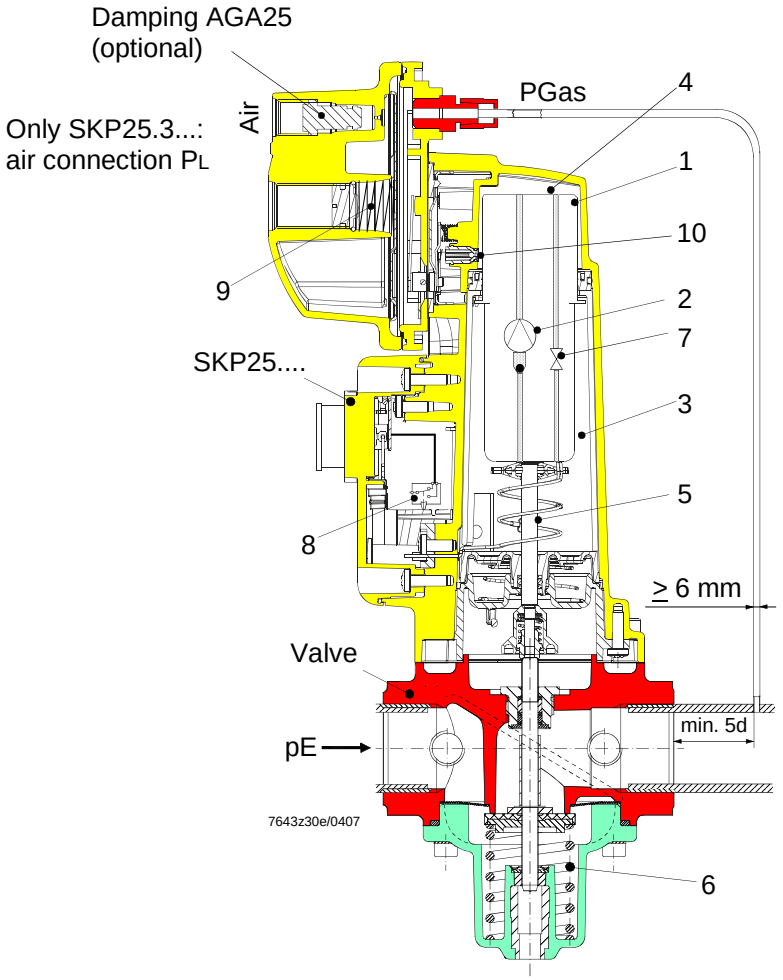

Legend

1	Piston
2	Oscillating pump
3	Oil reservoir
4	Pressure chamber
5	Stem
6	Valves closing spring
7	Control valve
8	End switch (optional)
9	Spring (setpoint adjustment)
10	Bypass valve

SKP25... / SKL25...

Setpoint adjustment «PGas» is made manually by turning the adjusting screw, which acts on the setpoint spring (for setpoint springs, refer to «Accessories»).

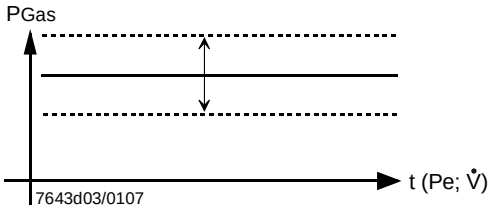

Legend

Pe	Inlet pressure
V̇	Volumetric flow
PGas	0...22 mbar (with AGA29 standard spring), presetting 15 mbar

SKP25.3...

The SKP25.3... operates based on the equal pressure principle «PL» : «PG» = 1:1. By feeding fan pressure «PL» to the air connection, gas pressure «PGas» follows in a fixed 1-to-1 ratio.

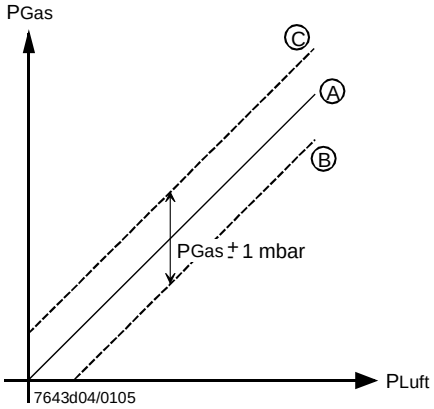

Ⓐ Gas / air ratio for stoichiometric com bustion

Ⓑ With low-fire, the parallel displacement of the working characteristic leads to a larger amount of excess air in per cent. The governor permits this paral lel displacement in both directions: «Excess air» Ⓑ and «Lack of air» Ⓒ

SKP25.2... The SKP25.2... features 2-stage setpoint changeover for 2-stage gas burners.

Assembly of SKP25.2... and valve (Schematic drawing)

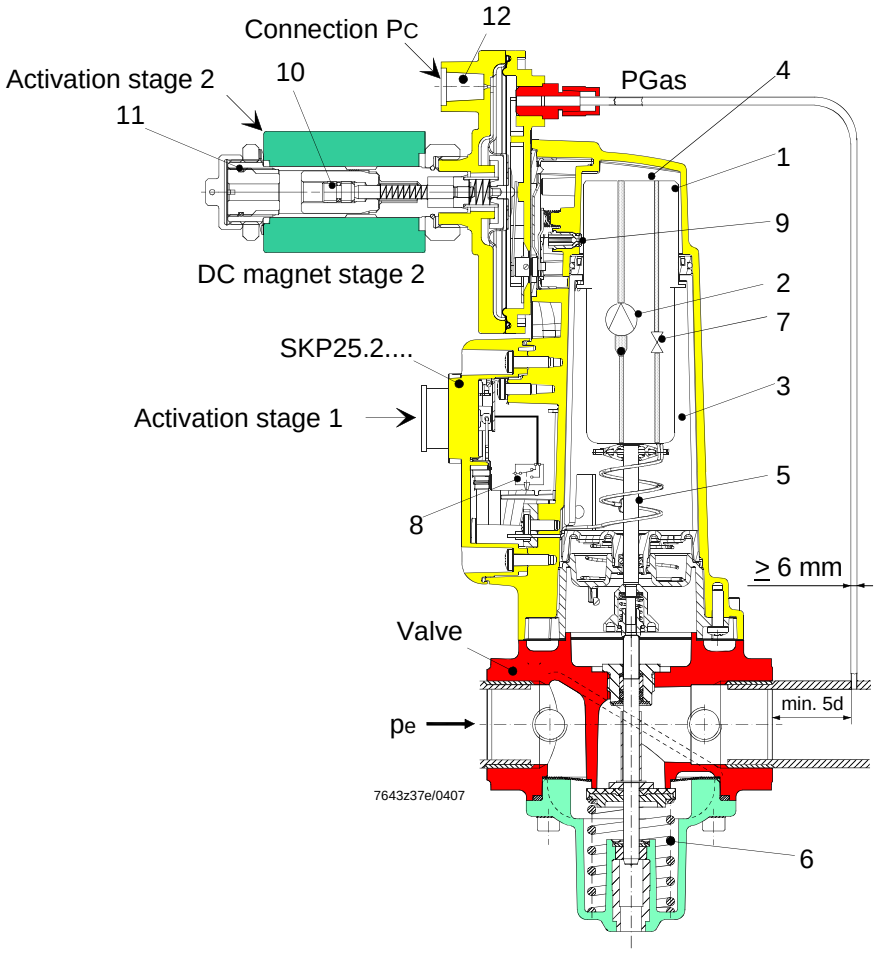

Legend

1 Piston
2 Oscillating pump
3 Oil reservoir
4 Pressure side
5 Stem
6 Valve's closing spring
7 Control valve
8 End switch (optional)
9 Bypass valve
10 High-fire screw (stage 2)
11 Low-fire screw (stage 1)
12 - Connection for combustion chamber pressure PC (recommended in case of PGas stage 1 < 3 mbar)
- If PC is not connected, a damping throttle AGA25.2 must be fitted if Pe > 20 mbar (application test)

Setpoint adjustment «PGas» is made manually by turning the adjusting screws (10 and 11), which act on the setpoint spring.

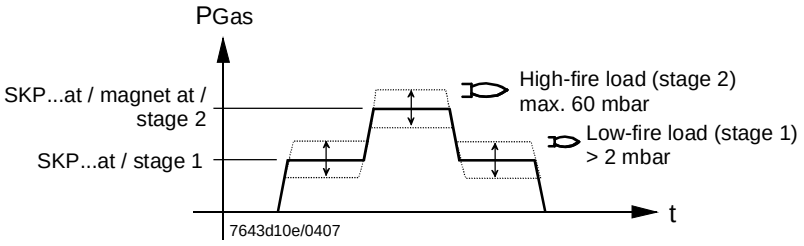

Setting example:

1. Set the low-fire load (stage 1):
   Set the low-fire screw (11) to the required pressure value (↻ +PGas).
2. Set the high-fire load (stage 2):
   Activate stage 2 and set the high-fire screw (10) to the required pressure value (↻ +PGas).
3. After setting the high-fire load, the low-fire load need be readjusted. Every high-fire setting / readjustment changes the low-fire setting!

☞ Refer to Mounting Instructions M7643.4 (74 319 0552 0)

Default settings:
- Low-fire:12 mbar
- High-fire: 55 mbar

SKP25.4... The SKP25.4... is suited for the control of higher pressures.
Standard spring 0...1,500 mbar.

SKP25.4... complete with valve (Schematic drawing)

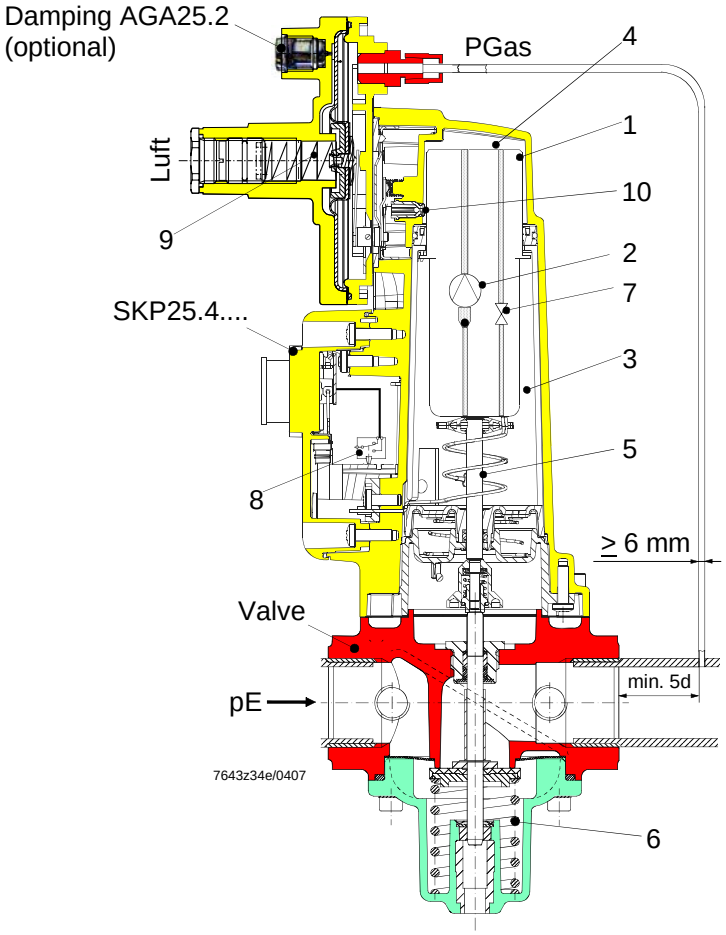

Legend

1	Piston
2	Oscillating pump
3	Oil reservoir
4	Pressure side
5	Stem
6	Valve's closing spring
7	Control valve
8	End switch (optional)
9	Spring (setpoint adjustment)
10	Bypass valve

SKP25.4... Setpoint adjustment «PGas» is made manually by turning the adjusting screw, which acts on the setpoint spring (for setpoint springs, also refer to «Accessories»).

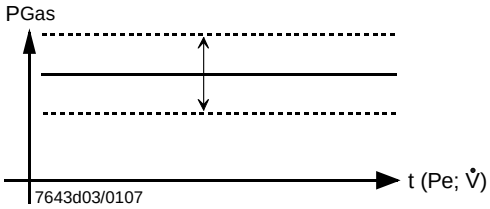

Legend

Pe	Inlet pressure
V̇	Volumetric flow
PGas	0...1,500 mbar (with built-in standard spring AGA23), presetting 1,200 mbar

SKP25.7...

The SKP25.7... works like the constant pressure governor SKP25..., but with electrical adjustment of the setpoint spring.

Its field of use are primarily
- atmospheric burners (modulating or multistage operation)
- single burners or groups of burners on industrial furnaces
- changes to the air ratio from a remote location in the case of burners using fixed ratio control

Assembly SKP25.7... with valve

(Schematic drawing)

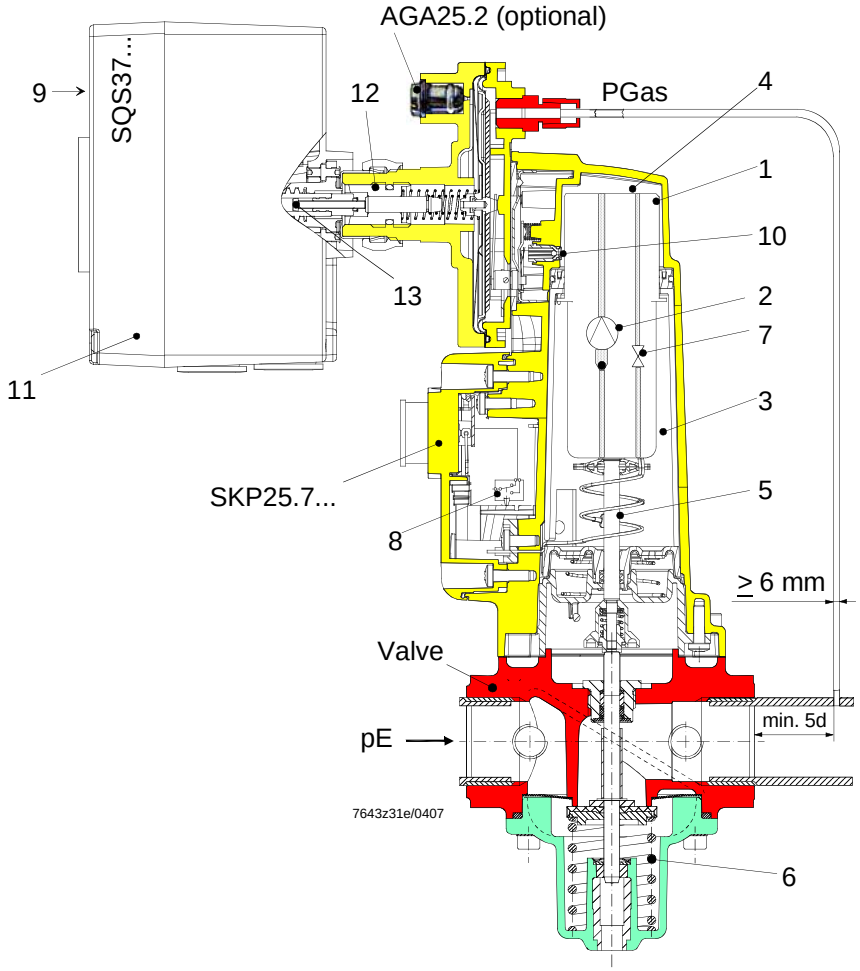

Legend

1	Piston
2	Oscillating pump
3	Oil reservoir
4	Pressure side
5	Stem
6	Valve's closing spring
7	Control valve
8	End switch (optional)
9	Position marker
10	Bypass valve
11	End switch ACS9.6 (optional)
12	Low-fire screw «wu»
13	High-fire screw «wo»

Setting example:
The low-fire pressure value (minimum pressure wu) must be set with the SQS37... removed, using the low-fire screw (12). The maximum high-fire setting must be made with the stem of the SQS37... (13) fully extended.

☞ Refer to Mounting Instructions M7643.3 (4 319 1979 0)

Functioning principle of gas pressure governor with SQS37 motorized setpoint adjuster:

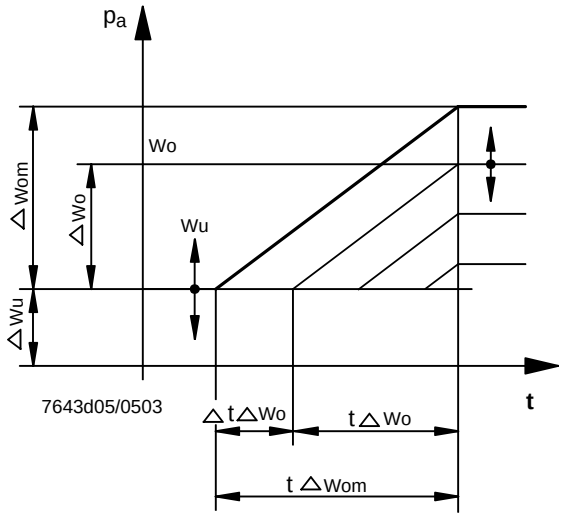

On the gas outlet side, the gas pressure governor maintains the pressure at the required setpoint.
The electrical signal fed to the SQS37 changes the preadjusted setpoint in proportion to the length of the electrical pulse, either increasing or decreasing, depending on the direction of the pulse signal.
When the preset maximum or minimum setpoint is reached, the outlet pressure will remain at a constant level.
The time required to traverse the upper setpoint range «Δwo» is the same in both directions.
Running time «tΔwo» changes in proportion to the change of the upper setpoint range «Δwo».
At the lower setpoint limitation «Δwu», the SQS37 runs idle during the period of time «ΔtΔwo», which means that a certain part of it can occur as dead time.

Setpoint springs for SKP25.7...

Delivery ex works for the following setpoint ranges:
Δwu 0.5...4 mbar ±15 %
Δwo 0...18 mbar ±15 %

For springs required for other pressure ranges, please refer to the following table.

Setpoint ranges other than the standard range can be selected by changing the springs. Each SKP25.7... is supplied with 7 additional springs in a plastic bag, which can be fitted on site, if required.

Spring		Δwu	Spring		Δwo
Color	Dia. mm	mbar ±15 %	Color	Dia. mm	mbar ±15 %
Steel-colored *	12	0.5...4	White	7	0...10
Green	12.5	2...15	Steel-colored *	7	0...18
Yellow	12.5	15...120	Red	7.5	0...45
Blue	13	10...30	Green	8	0...90

* The steel-colored springs are fitted in the SKP25.7...

Setpoint springs for «Δwo» cannot be used for «Δwu», and vice versa (refer to spring dia. in the table). All combinations of «Δwo» and «Δwu» are possible.

SKP55...

The SKP55... operates with a differential pressure governor and a fixed differential pressure ratio of 1-to-1.

SKP55... complete with valve

(Schematic drawing)

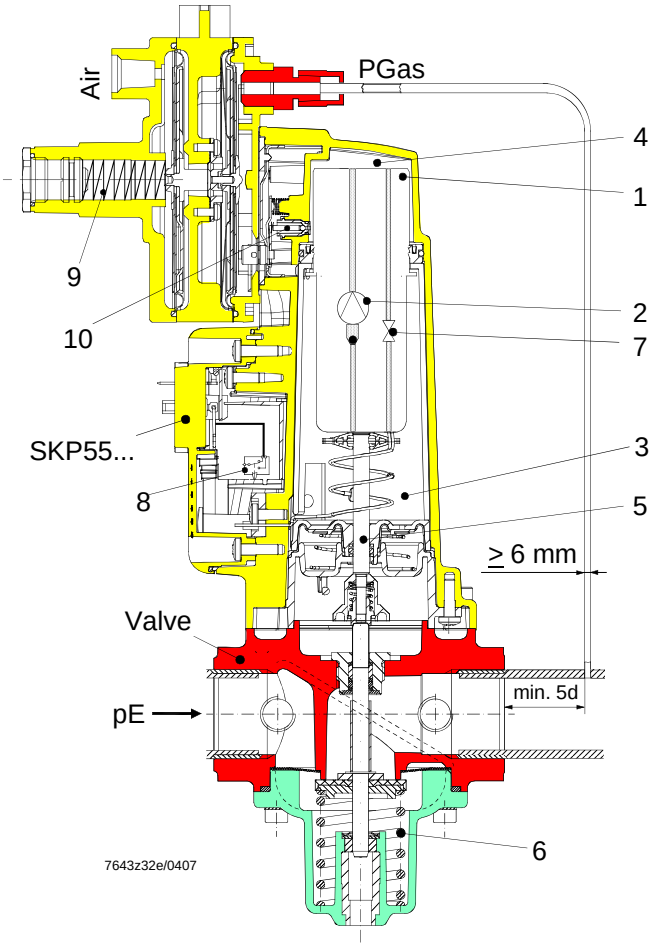

Legend

1	Piston
2	Oscillating pump
3	Oil reservoir
4	Pressure chamber
5	Stem
6	Valve's closing spring
7	Control valve
8	End switch (optional)
9	Spring (setpoint adjustment)
10	Bypass valve

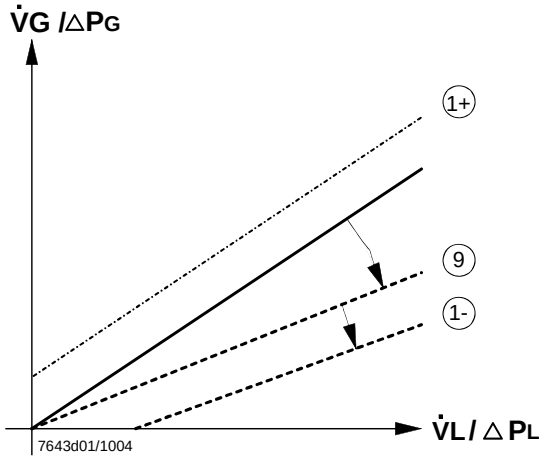

Example:
Adjusted gas / air ratio for burner operation with excess gas (1+). The percentage of excess air is constant across the entire load range. Gas / air ratio adjustment with the adjustable orifice on the gas side (see position ⑨).

Legend

$\dot{V}L$	Volumetric air flow
$\dot{V}G$	Volumetric gas flow

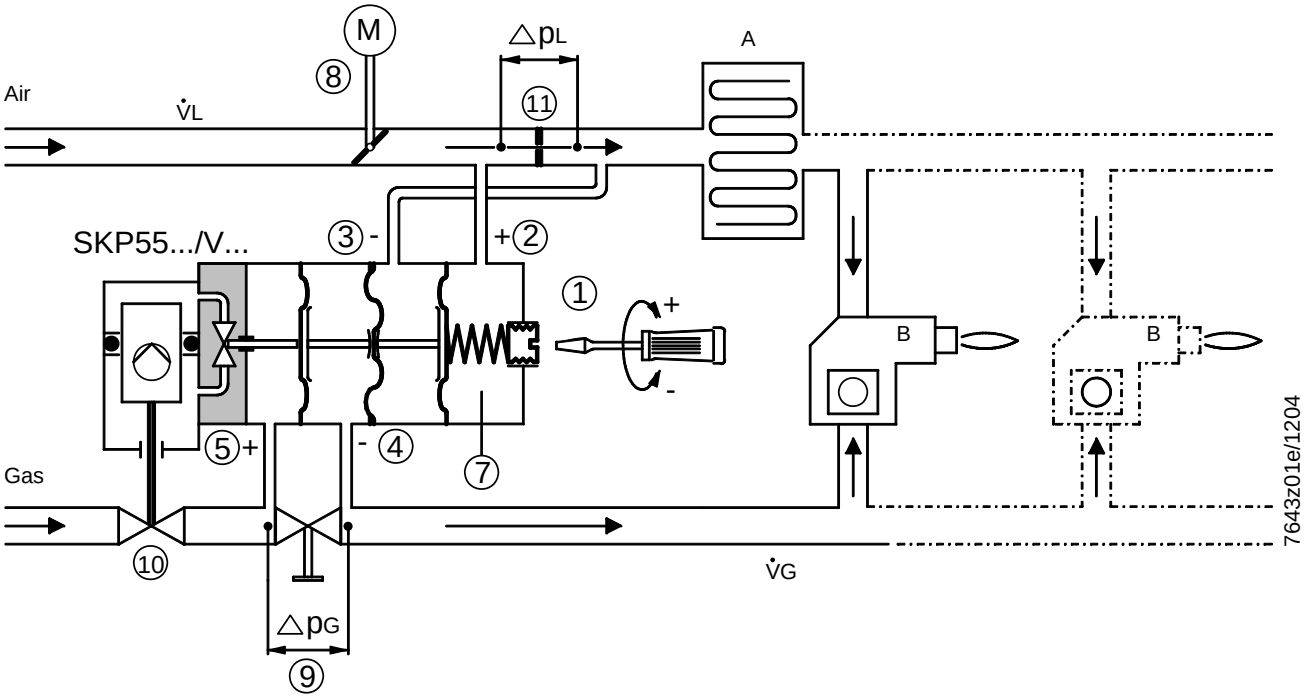

Safety notes:
Air damper ⑧ / orifice ⑪ must always be located as shown, which means that orifice ⑪ must be installed downstream from the air damper ⑧.
Gas valve ⑩ (VG...) / orifice ⑨ must always be located as shown, which means that orifice ⑨ must be installed downstream from the gas valve ⑩.

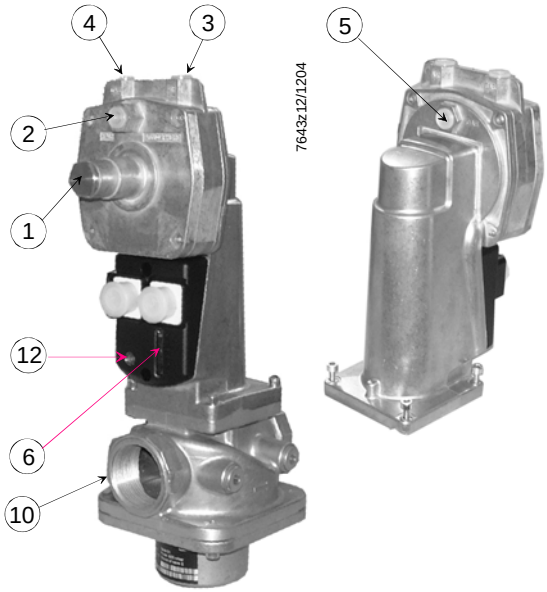

① Adjustment of parallel displacement of working characteristic
* Check combustion values with cap fitted
② Test point for air pressure (+)
③ Test point for air pressure (-)
④ Test point for gas pressure (-)
⑤ Test point for gas pressure (+)
⑥ Stroke indication
⑦ Spring (parallel displacement)
⑧ Actuating device (air)
⑨ Orifice (gas)
⑩ Gas valve
⑪ Orifice (air)
⑫ Indication of operating state (LED)

Legend

ΔpG	Differential pressure across orifice on the gas side
ΔpL	Differential pressure across orifice on the air side
A	Air heating coil (recuperator)
B	Burner
M	Actuator

SKP55…

- Adjustment of governor on modulating burners prior to startup:
  - Adjusting screw ① on the SKP55... should be set to a gas / air ratio curve which passes through the neutral point. The SKP55... is supplied with that factory setting.
    Adjustment in the field can be made as follows:
    Note:
    Fit cap again before measuring the combustion value and after the setting is made.
    Turn adjusting screw ① in counterclockwise direction until spring ⑦ is completely loose. Shut off the gas supply upstream of the SKP55... Switch on the SKP55... Turn adjusting screw ① in clockwise direction until valve opens
  - Bring the adjustable orifice ⑨ to the precalculated value. That value with the same pressure differential on the air and gas side must lead to practically stoichiometric combustion
  - Start the burner and run it to about 90 % of the nominal load
  - Measure the combustion quality and make adjustments of the flow rate with the adjustable orifice ⑨ until optimum measured values are reached (fine adjustment)
  - Return to low-fire operation. Check the combustion and readjust if necessary the position of the working characteristic with the setting screw ① on the SKP55... until optimum measured values are reached. Clockwise rotation → more gas. Counterclockwise rotation → less gas, that is, parallel displacement of the working characteristic towards lack of air or excess air
  - Limit the air damper ⑧ for low-fire operation
  - If a significant parallel displacement of the working characteristic was required, the setting must be checked again at 90 % of the nominal load and then readjusted, if required
  - Run the burner to the predefined nominal load with the help of the air damper ⑧ and limit the actuator position for that load
  - Check the flue gas values at a few positions of the load range. Make readjustments in the nominal load range with the adjustable orifice ⑨, and in the low-fire range with screw ① on the governor of the SKP55...

SKP75...

The SKP75... operates with a pressure ratio governor and an adjustable gas / air ratio.

SKP75... complete with valve

(Schematic drawing)

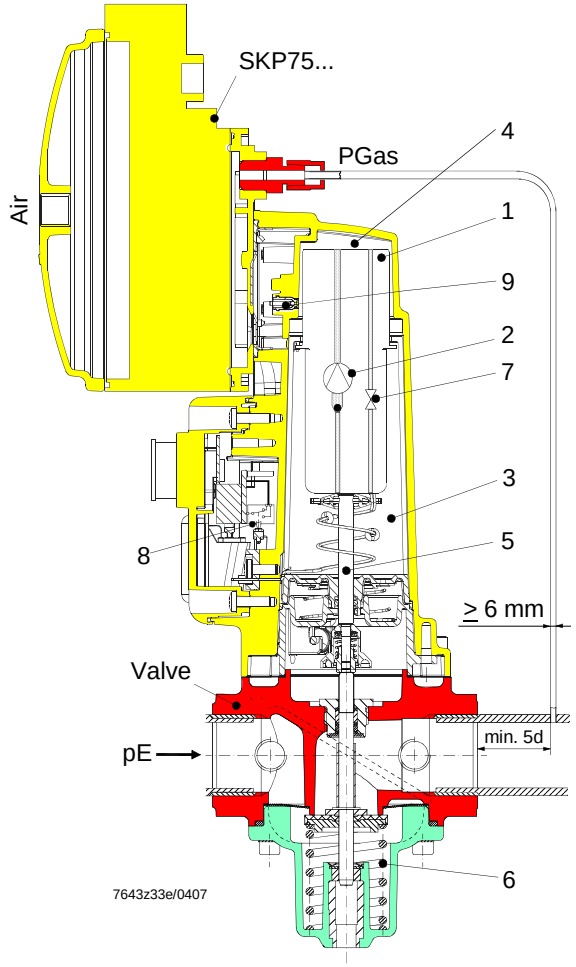

Legend

1 Piston
2 Oscillating pump
3 Oil reservoir
4 Pressure chamber
5 Stem
6 Valves closing spring
7 Control valve
8 End switch (optional)
9 Bypass valve

Adjustment of governor on modulating burners

- Use setting screw ① / «PGAS» / «PAIR» to set the gas / air ratio to the required value (coarse setting) and the scale with setting screw ② to zero (refer to Fig. 7643z03)
- Start the burner and run it to about 90 % of the nominal load
- Measure the CO2 or O2 content of the flue gases and optimize the adjustment with setting screw ① / «PGAS» / «PAIR» (refer to Fig. 7643z03)
- Return to low-fire operation, check the CO2 or O2 content of the flue gases. If necessary, readjust position of the working characteristic with setting screw ②/ until optimum measured values are attained
- Limit the air damper position for low-fire operation

Meaning of setting screw markings:

+ More gas

- Less gas

If a significant parallel displacement of the working characteristic was required to obtain optimum CO2 or O2 values in low-fire operation, the adjustment of the pressure ratio at nominal load or 90 % of the nominal load must be checked again and readjusted, if required.

- Run the burner to the required output and limit the nominal load air damper position
- Check the flue gas values at various positions of the load range

If readjustments are required:
- Use setting screw ① / «PGAS» / «PAIR» in the nominal load range
- Use setting screw ②/ to make parallel displacements of the characteristic in the flow-fire range

If the gas / air pressure ratio lies outside the setting range, an orifice in the gas or air flow can be used to adjust the pressure at the test points on the burner side. Prerequisite is that there is a sufficient gas or air pressure reserve on the inlet side.

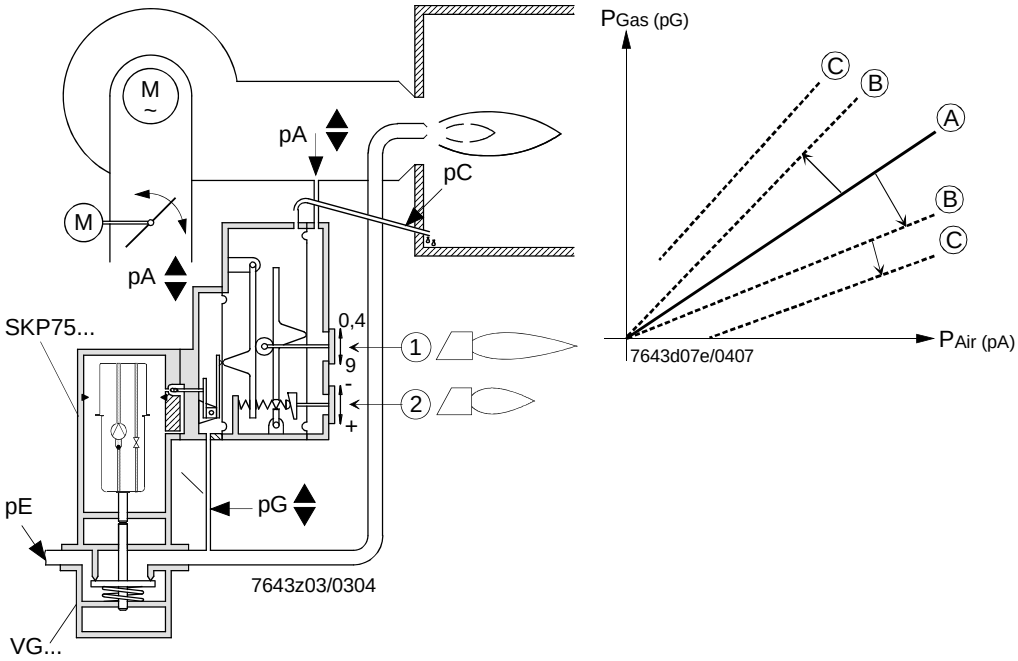

① Setting and display of the gas / air ratio

② Setting and display of parallel displacement of the working characteristic

③ Test point for combustion chamber pressure

④ Test point for air pressure

⑤ Test point for gas pressure

⑥ Stroke indication

⑦ Operation indicator (LED)

⑧ Gas valve

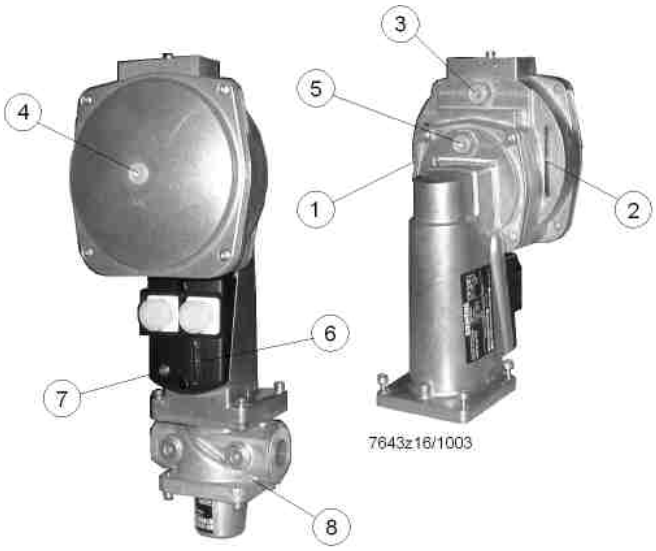

Function

If the air pressure (fan pressure) exceeds the maximum value of

- 30 mbar with a PGas / PAir ratio of ≥ 2
- 50 mbar with a PGas / PAir ratio of ≤ 2

permitted for the governor, the pressure must be lowered with a reducing T-piece AGA78 (also refer to «Technical data»).

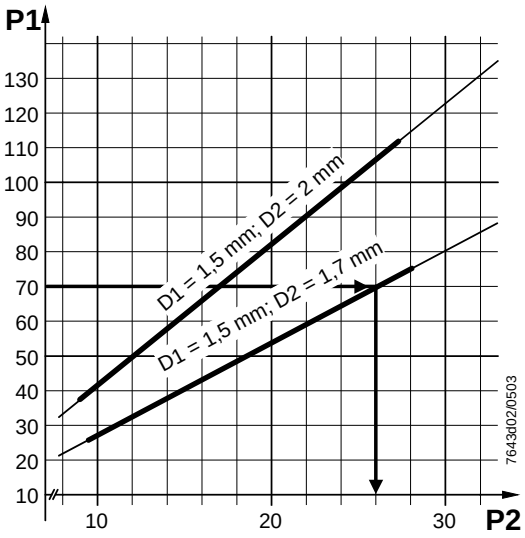

Example:
p1 = 70 mbar
D1 = 1.5 mm
D2 = 1.7 mm

Wanted: Air pressure signal «p2» for SKP75...
p2 = 26 mbar

Air is continuously vented to atmosphere via orifice «D2». The pressure of the following medium will be reduced via throttle «D1». The illustration below shows the correlations.

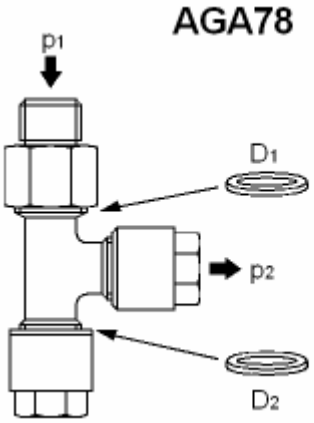

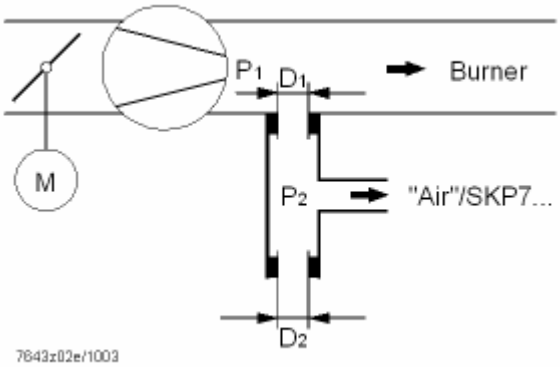

The reducing T-piece AGA78 is supplied ready for mounting, with D1 = 1.5 mm and D2 = 1.7 mm.
D2 with a diameter of 2 mm is included as a loose item.

Standards and certificates

ISO 9001: 2000
Cert. 00739

ISO 14001: 2004
Cert. 38233

For use in the U.S. / Canada, the actuators carry type suffix «U» (see example) and are FM APPROVED, UL and SP -listed (*Example:* SKP25.003**U1**, refer to separate Data Sheet [on request]).

In connection with valves

Conformity to EEC directives

– Electromagnetic compatibility EMC (immunity)	89 / 336 / EEC
– Directive for gas appliances	90 / 396 / EEC
– Directive for pressure devices	93 / 23 / EC

Disposal notes

The actuator contains electrical and electronic components and hydraulic oil and must not be disposed of together with domestic waste.
Local and currently valid legislation must be observed.

Type summary (other types of actuators on request)

The complete gas shutoff assembly or pressure governor / controller assembly consists of actuator and valve.

SKP15...

Mains voltage	**AC 100...110 V**	**AC 220...240 V**
1-stage opening and closing, without end switch	**SKP15.000E1**	**SKP15.000E2**
1-stage opening and closing, with end switch	**SKP15.001E1**	**SKP15.001E2**

SKP25...

1-stage opening and closing, without end switch, with pressure governor up to 22 mbar	**SKP25.003E1**	**SKP25.003E2**
1-stage opening and closing, with end switch, with pressure governor up to 22 mbar	**SKP25.001E1**	**SKP25.001E2**
2-stage opening and closing, with end switch, with pressure governor up to 60 mbar	**SKP25.201E1** [1])	**SKP25.201E2** [1])
2-stage opening and closing, without end switch, with pressure governor up to 60 mbar	**SKP25.203E1** [1])	**SKP25.203E2** [1])
1-stage opening and closing, without end switch, zero governor version	**SKP25.303E1**	**SKP25.303E2**
1-stage opening and closing, without end switch, with pressure governor up to 1,500 mbar, high-pressure version	**SKP25.403E1**	**SKP25.403E2**
1-stage opening and closing, with end switch, with pressure governor up to 1,500 mbar, high-pressure version	**SKP25.401E1** [1])	**SKP25.401E2** [1])
1-stage opening and closing, without end switch, for electric setpoint adjustment	**---**	**SKP25.703E2 [1])**
1-stage opening and closing, with end switch, for electric setpoint adjustment	**---**	**SKP25.701E2 [1])**

[1]) On request

SKL25...

1-stage opening and closing, without end switch, with pressure governor up to 22 mbar	---	**SKL25.003E2**
1-stage opening and closing, with end switch, with pressure governor up to 22 mbar	**SKL25.001E1**	**SKL25.001E2**

SKP55...

1-stage opening and closing, without end switch, with differential pressure governor	**SKP55.003E1**	**SKP55.003E2**
1-stage opening and closing, with end switch, with differential pressure governor	**SKP55.001E1**	**SKP55.001E2**

SKP75...

1-stage opening and closing, without end switch, with pressure ratio controller	**SKP75.003E1**	**SKP75.003E2**
1-stage opening and closing, with end switch, with pressure ratio controller	**SKP75.001E1**	**SKP75.001E2**
1-stage opening and closing, without end switch, with pressure ratio controller, with greater parallel displacement	**SKP75.503E1**	**SKP75.503E2**
1-stage opening and closing, with end switch, with pressure ratio controller, with greater parallel displacement	**SKP75.501E1**	**---**

Ordering examples

When ordering, please give the complete type reference of the actuator (refer to «Type summary»). All components must be ordered as separate items.

Example of SKP15...

Actuator
- On / off
- With end switch

- For AC 230 V / 50 Hz	**SKP15.001E2**
Connector valve actuator (plug)	**AGA64**
Connector end switch (plug)	**AGA65**

The complete gas valve shutoff pressure governor assembly consists of actuator and valve. Please order the required valves as separate items (refer to the relevant Data Sheets). Actuator and valve are supplied unassembled. Assembly is very straightforward and preferably made on the burner.

Complete combination of actuator / valve consisting of:
- Gas valve (refer to Data Sheets VG... N7631 and VR... N7636)
- SKP15.001E2 actuator
- Accessories

Example of SKP25...

Gas pressure governor with safety shutoff feature:
- Without end switch

- For AC 230 V / 50 Hz	**SKP25.003E2**
Connector valve actuator (plug)	**AGA64**

Combination of gas pressure governor / valve consisting of:
- Gas valve (refer to Data Sheets VG... N7631 and VR... N7636)
- SKP25.003E2 actuator
- Accessories, e.g. AGA25 (damping throttle)

Accessories (not supplied as standard, to be ordered as separate items)

Adapter plug **AGA62.000A000**

- For powering both actuators on the double valve VGD... via plug (AGA64)

Example: SKP15... / SKP25.2... with adapter plug AGA62.000A000

Central connection via AGA64
for the **separate** control
of valves 1 and valves 2
Facilitates valve prooving
via pressure switch between the
valves or
ignition via pilot burner

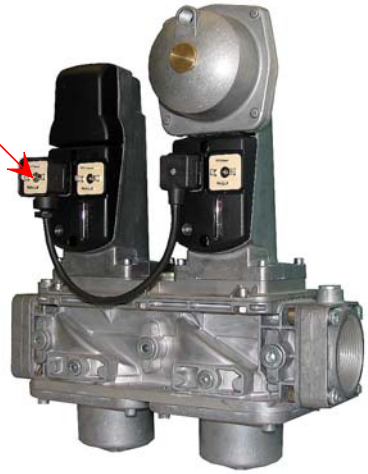

Adapter plug for SKP25.2… **AGA62.2**

- For powering both actuators and the magnet (stage 2) via plug (AGA64)
  Both valves are activated simultaneously
- Including rectifier for DC coil (activation stage 2)

Example: SKP15... / SKP25.2... with adapter plug AGA62.2

Integrated rectifier

Stage 2 (DC coil)

Central connection via AGA64
for the common control
of valves 1 and valves 2

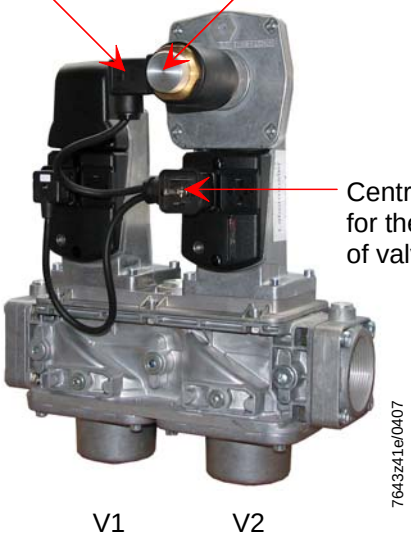

Heating element **AGA63.5A27**

- Refer to Data Sheet N7923
- For use at low ambient temperatures (< -10...-20 °C)

Contact box for valve actuator (power supply) **AGA64**

- Plug-in connector conforming to DIN EN 175301-803-A
- 3 pole + ⏚
- Dia. 6...9 mm / max. 1.5 mm²

Example: SKP15... / SKP25... with contact box AGA64

Contact box for end switch **AGA65**
- Plug-in connector conforming to DIN EN 175301-803-A
- 3 pole + ⏚
- Dia. 4.5...11 mm / max. 1.5 mm²

Example: SKP15... / SKP75... with contact box AGA65

V1 V2

Contact box for powering the magnetic actuator SKP25.2… **AGA67**
- Plug-in connector conforming to DIN EN 175301-803-A
- With integrated bridge rectifier
- 2 pole + ⏚
- Dia. 6...8 mm / max. 1.5 mm²
- Including profile seal

Example: SKP15... / SKP25... with contact box AGA67

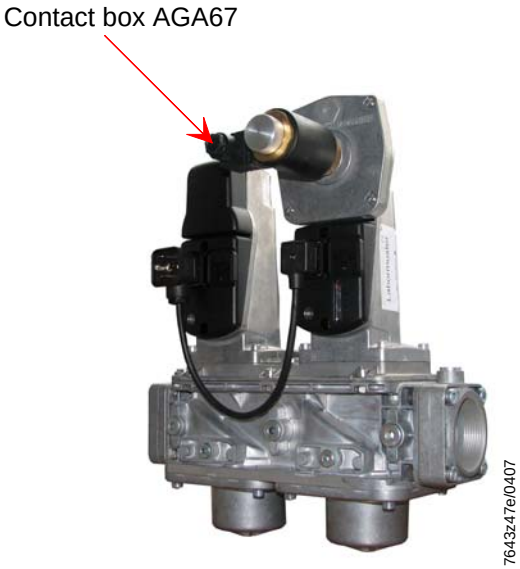

V1 V2

Adapter plug for AGA62.000A000 **AGA68**
- For common valve control

Example: SKP15... / SKP25... with adapter plug AGA68

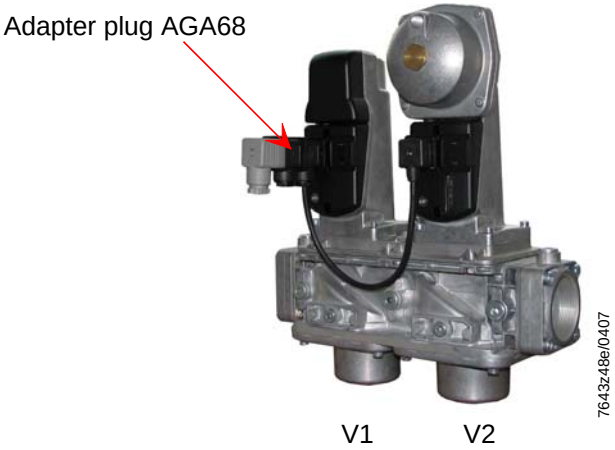

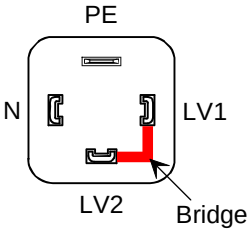

Motorized setpoint adjuster for SKP25.7... **SQS37**
- 35 s
- For 5.5 mm stroke
- Refer to Mounting Instructions M7643.3
- Refer to Data Sheet SQS35…, N4573

Accessories (not supplied as standard, to be ordered as separate items) (cont´d)

Setpoint spring (yellow) for SKP25... **AGA22**
- Optional for built-in standard spring AGA29
- 15...120 mbar (SKP25.0…)
- 0…700 mbar at SKP25.4... (optional for AGA23)
- Refer to Mounting Instructions 74 319 0516 0

Setpoint spring (red) for SKP25... **AGA23**
- Optional for built-in standard spring AGA29
- 100...250 mbar (SKP25.0…)
- 0...1,500 mbar at standard spring SKP25.4...
- Refer to Mounting Instructions 74 319 0516 0

Setpoint spring (blank) for SKP25.3... **AGA28**
- Equivalent built-in standard spring
- ±1.5 mbar

Setpoint spring (blank) for SKP25.0... **AGA29**
- Equivalent built-in standard spring
- 0...22 mbar

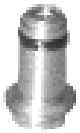

Damping throttle for SKP25.0... and SKP25.3... **AGA25**
- Optional

Damping throttle for SKP25.2... **AGA25.2**
- Optional

Damping throttle for SKP55... **AGA75**
- Optional, pipe connection for 8 mm dia.
- Refer to Mounting Instructions 4 319 9585 0

Damping throttle for SKP55... **AGA75E**
- Optional
  (same as damping throttle AGA75 but with ¼“ threaded connection on both sides)
- Refer to Mounting Instructions 4 319 9601 0

Pressure reducing-T-piece for SKP75... **AGA78**
- Optional

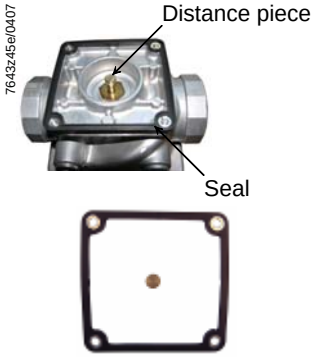

Gasket set **AGA66**

- For mounting between actuator SKPx5… and valve (VG… / VR…)
- Increases degree of protection from IP54 to IP65
- When using VGG… single valves, observe Data Sheet N7636
- Refer to Mounting Instructions M7643.2 (74 319 0421 0)

Technical data

General device data	Mains voltage	AC 220 V –15 %...AC 240 V +10 % AC 100 V –15 %...AC 110 V +10 %
	Mains frequency	50...60 Hz ±6 %
	Power consumption - SKPx5... - SKP25.2...	 max. 13.5 VA max. 48.5 VA
	End switch (if fitted) - Switching capacity	Factory-set as closed position switch valve fully closed 4 (2 A, cosφ = 0.3)
	On time	100 %
	Opening time for full stroke	6...10 s (depending on nominal valve size) (longer opening times below 0 °C)
	Opening speed (approx. 2 mm / s)	lower opening speeds due to low ambient temperatures can be compensated by fitting an AGA63.5A27 heating element
	Closing time - SKP… - SKL25…	 < 0.8 s (in the event of power failure) 3…6 s (depending on the type of valve)
	Perm. mounting positions	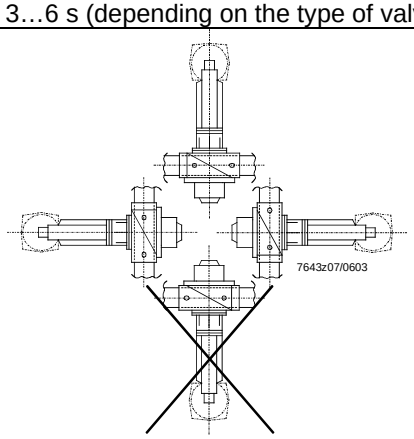 always with the diaphragms in the vertical position
	Degree of protection - SKPx5... - SKP25.2...	IP 54 → only ensured when central screw at the connector is tightened → only with screwed-on locking cap
	Stroke	max. 26 mm (valve limits max. stroke)
	Weight - SKP15... - SKP25... - SKP25.2… - SKP25.7… - SKL25… - SKP55... - SKP75...	 approx. 1.1 kg approx. 1.6 kg approx. 2.1 kg approx. 1.6 kg (without SQS37) approx. 1.6 kg approx. 1.9 kg approx. 2.3 kg
	Perm. media	depending on the type of valve
	Medium inlet pressure «PE»	depending on the type of valve
	Perm. medium temperature	depending on the type of valve
	Flow rate	depending on the type of valve
	Perm. test pressure «PG»	1,000 mbar
	Perm. underpressure «PG»	200 mbar

Environmental conditions	**Storage**	DIN EN 60 721-3-1
	Climatic conditions	class 1K3
	Mechanical conditions	class 1M2
	Temperature range	-10...+60 °C
	Humidity	< 95 % r.h.
	Transport	DIN EN 60 721-3-2
	Climatic conditions	class 2K2
	Mechanical conditions	class 2M2
	Temperature range	-10...+60 °C
	Humidity	< 95 % r.h.
	Operation	DIN EN 60 721-3-3
	Climatic conditions	class 3K3
	Mechanical conditions	class 3M3
	Temperature range	-10...+60 °C (longer opening times below 0 °C) -20…+60 °C (with heating element AGA63.5)
	Humidity	< 95 % r.h.

⚠ **Condensation, formation of ice and ingress of water are not permitted!**

SKP25...	Setpoint range of outlet pressure	0.5...250 mbar (3 setpoint springs, refer to «Accessories»)
	- SKP25.4...	0...1500 mbar
	Control class	A to DIN EN 88
	Setting range (setpoint)	max. 250 mbar (gas pressure)
	Control group	III to DIN 3392
SKP25.2…	Setting range (pressure)	2…60 mbar
	Power consumption (stage 2)	35 VA
	Voltage versions	AC 120 V / AC 230 V
SKP25.3…	Combustion air pressure	max. 50 mbar
	Zero governor	to EN 12067-1
	Compensating variable	differential pressure of combustion air > 0.5 mbar
	Differential pressure ratio (gas / air)	1:1
	Parallel displacement	P_{Gas} ±1 mbar
SKP25.7...	Setpoint ranges Δw_o / Δw_u	refer to «Function diagram»
	Temperature range in operation	-5…+50 °C (limited by SQS37)
SKP55...	Differential pressure ratio (gas / air)	1:1
	Perm. differential pressure the controller may be subjected to during operation	Δ 0.3...200 mbar
	Control accuracy	< 10 % at «Δpmin» < 1 % at «Δpmax»
	Parallel displacement of working characteristic - Excess gas - Excess air	 1 mbar 1 mbar
	Compensating variable	differential pressure of combustion air > 0.3 mbar
	Interval required for load change via air damper, from high- to low-fire	min. 5 s (depending on the valve's stroke)

SKP75...	Control accuracy	< 10 % at «Δpmin» < 2 % at «Δpmax»
	Control group	III to DIN 3392
	Control variable «Gas pressure»	differential pressure «PG-PF» or «PG-PAir» min. 0.8 mbar max. 120 mbar
	Control class	A to DIN EN 88
	Compensating variable	combustion air when connecting combustion chamber pressure, differential pressure of «Pair – Pcombustion chamber» > 0.5 mbar
	Air pressure at «PGas/PAir» - ≥ 2 - ≤ 2 - for higher pressures, see AGA78 (accessory)	 max. 30 mbar max. 50 mbar max. 150 mbar
	Setting range pressure ratio - «Pgas / PAir»	refer to «Type summary» 0.4...9
	Parallel displacement of working characteristic - Excess gas - Excess air - Excess with SKP75.5...	 1 mbar 1 mbar 4.5 mbar
	Perm. combustion chamber pressure	depending on the controlled variable gas pressure «PG»
	Recommended distance impulse pipe connection from valve	min. 5 x nominal valve size at a location with no turbulence
	Inlet pressure	same as valve
	Perm. test pressure «PG»	1 bar
	Perm. underpressure «PG»	200 mbar
	Interval required for load change via air damper, from high-fire to low-fire	min. 4 s (depending on valve stroke)
Motorized setpoint adjuster SQS27...	Mains voltage (control voltage)	AC 230 V +10 % / -15 %
	Mains frequency	50...60 Hz ±6 %
	Power consumption	2.5 VA
	Running time «ΔtΔwom»	5.5 mm / 35 s
	Degree of protection	IP 54
	Safety class	II to VDE 0631
	Environmental conditions	Vmax environment 50 °C

For more details, refer to Data Sheet N4573!

Connection of SKPx5…
(front-view)

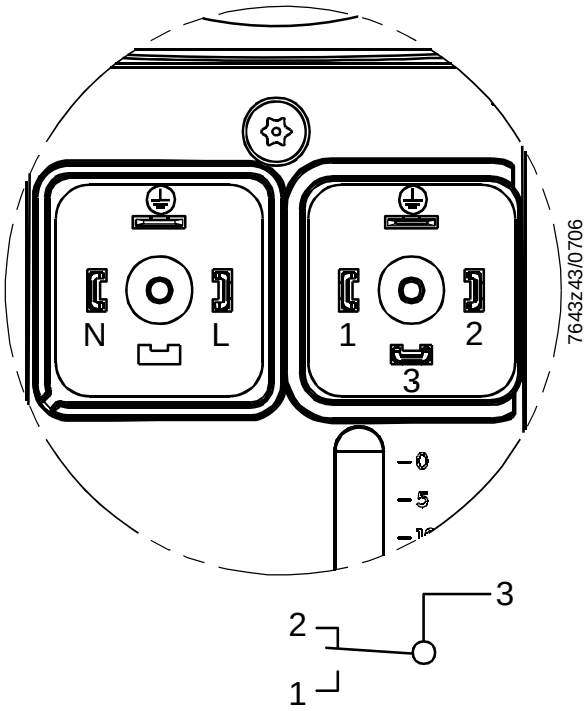

← If valve closed

(Only with SKPxx.xx1xx)

Valve actuator	End switch
Connection via AGA64	Connection via AGA65
DIN EN 175301-803-A	DIN EN 175301-803-A

Dimensions in mm

Actuators SKP15...

Example: SKP15.000…

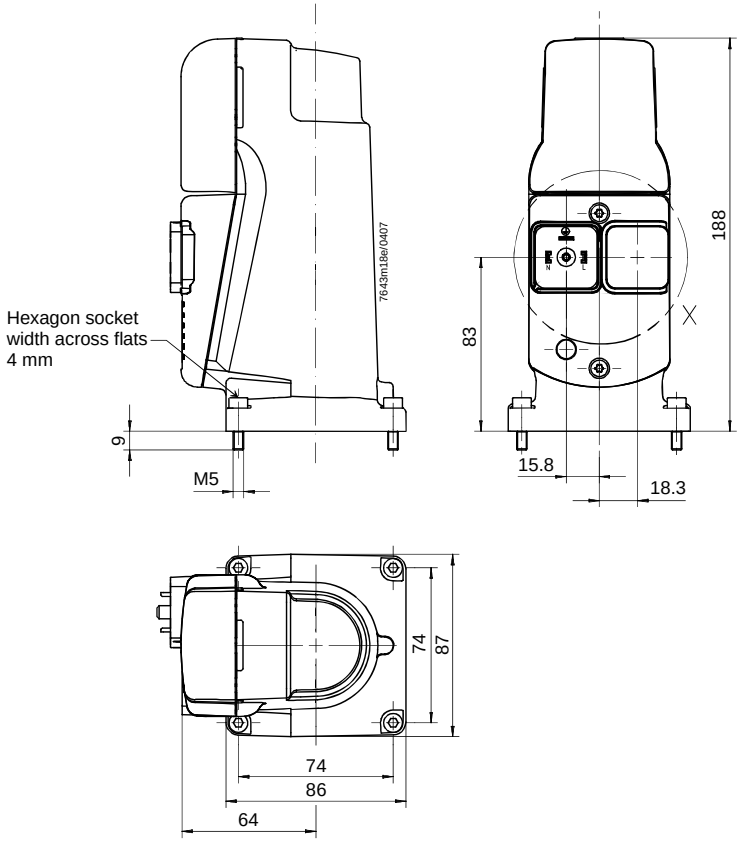

SKP15.000…

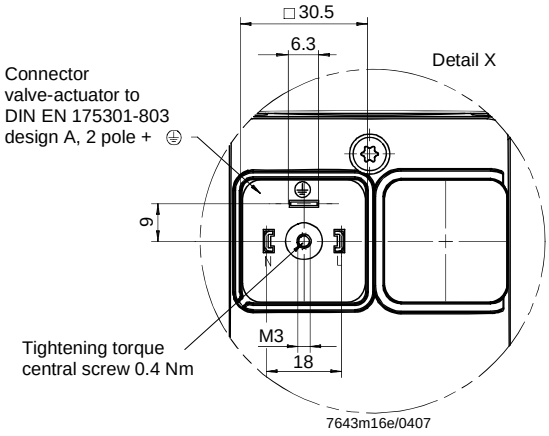

SKP15.001…

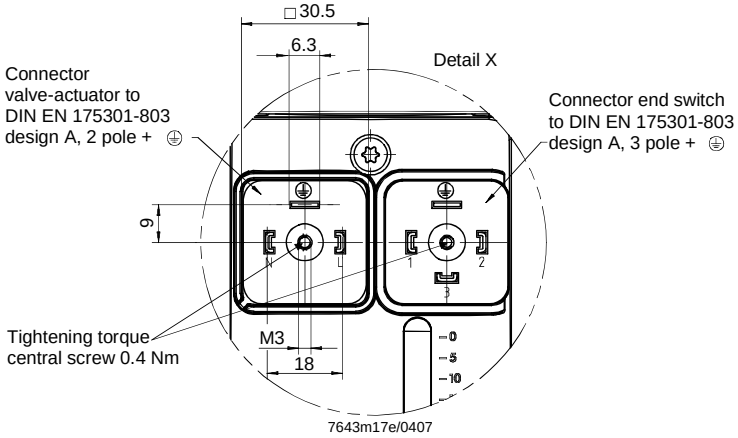

Dimensions in mm

Actuator SKP25.0... /
SKP25.3... / SKL25...

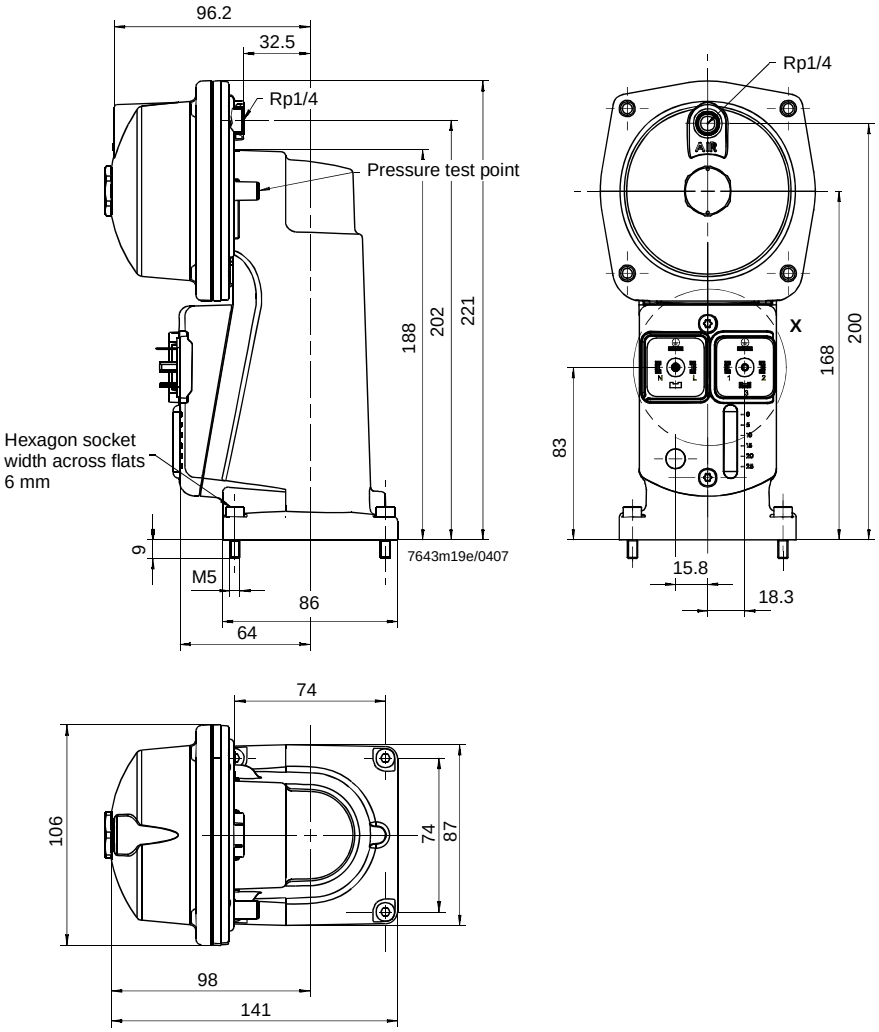

SKP25.001… / SKL25.001…

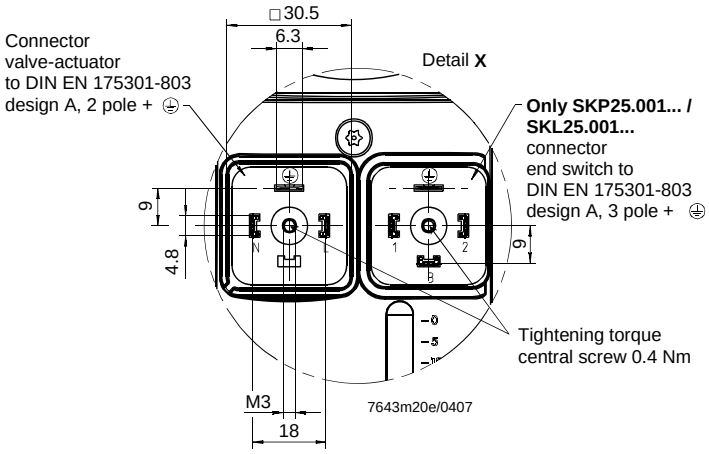

Dimensions in mm

Actuator SKP25.2...

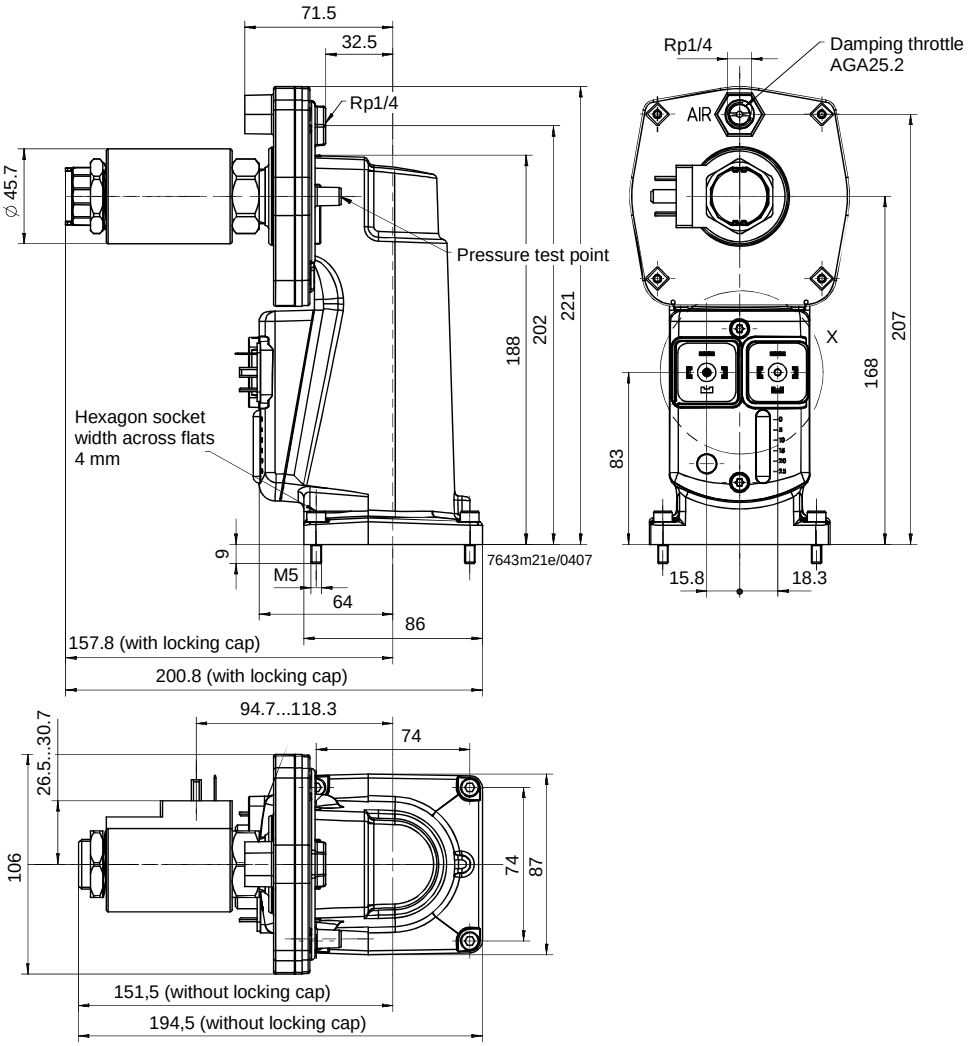

SKP25.201…

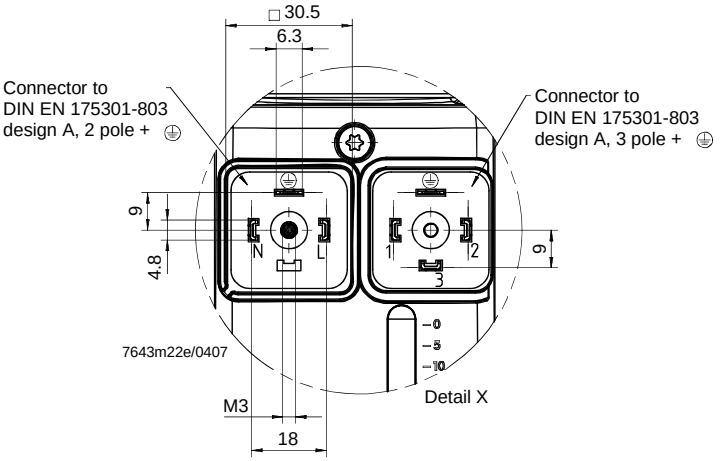

Dimensions in mm

Actuators SKP25.4...

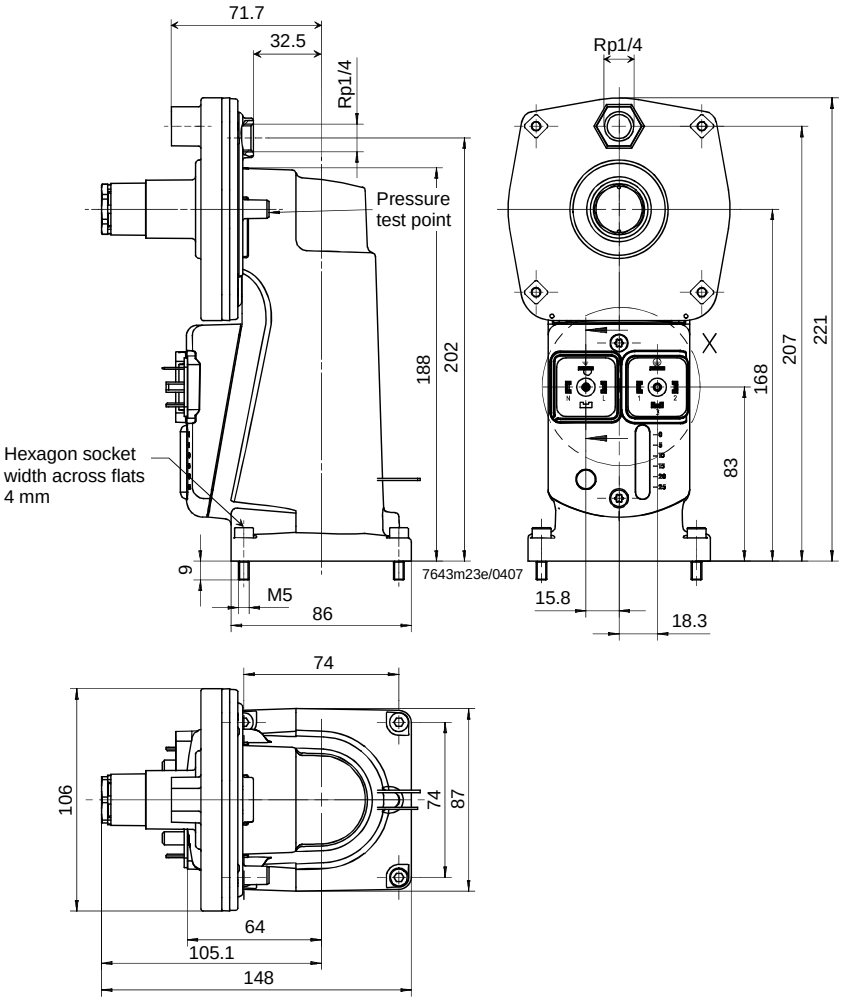

SKP25.401…

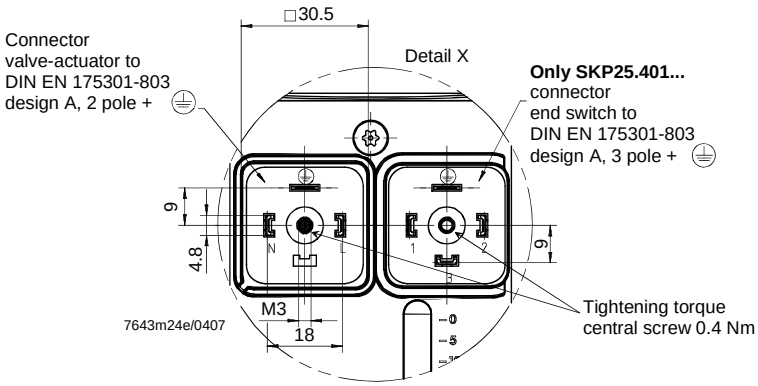

Dimensions in mm

Actuator SKP25.7…
without motorized set-point adjuster SQS37

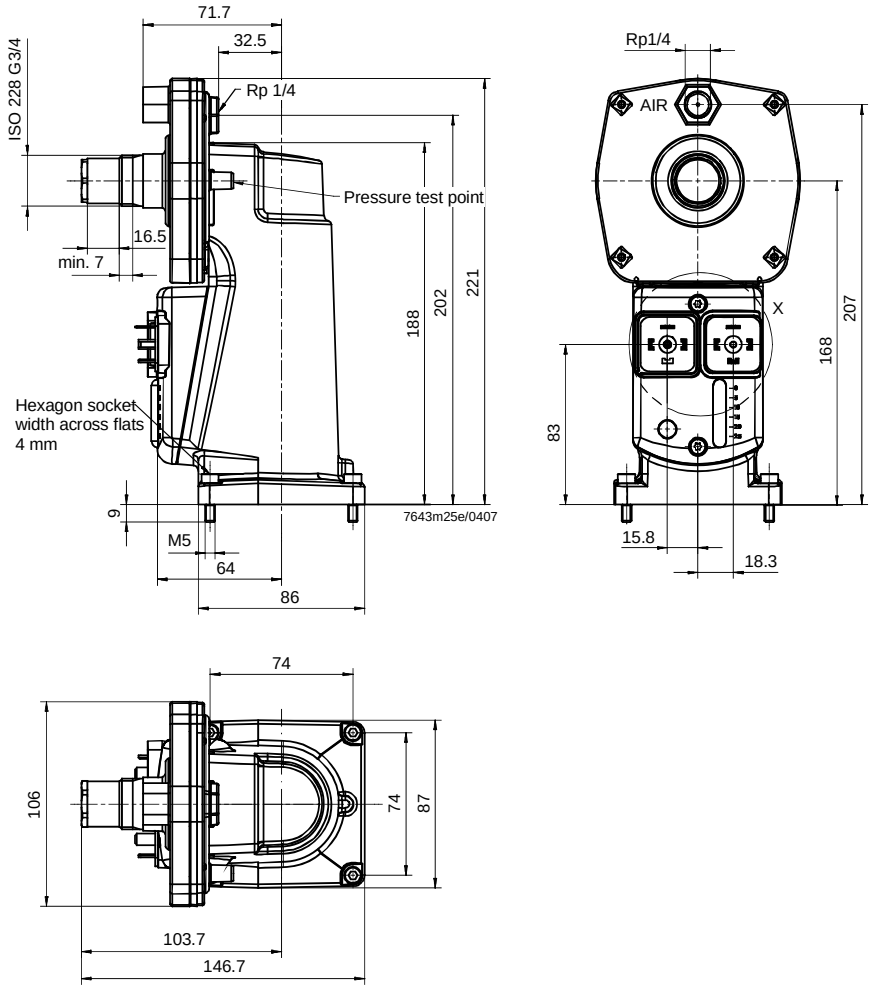

SKP25.701…

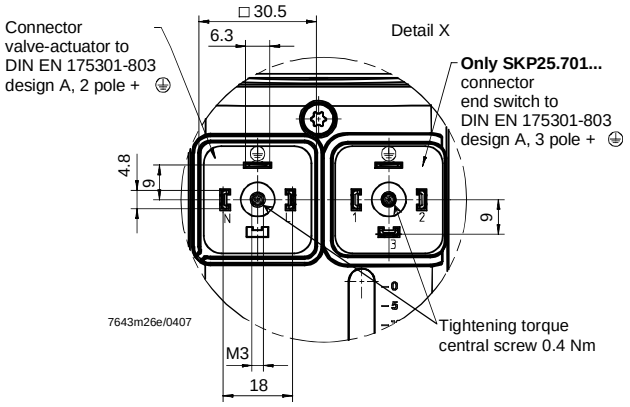

Dimensions in mm

Actuator SKP25.7...
with motorized setpoint
adjuster SQS37

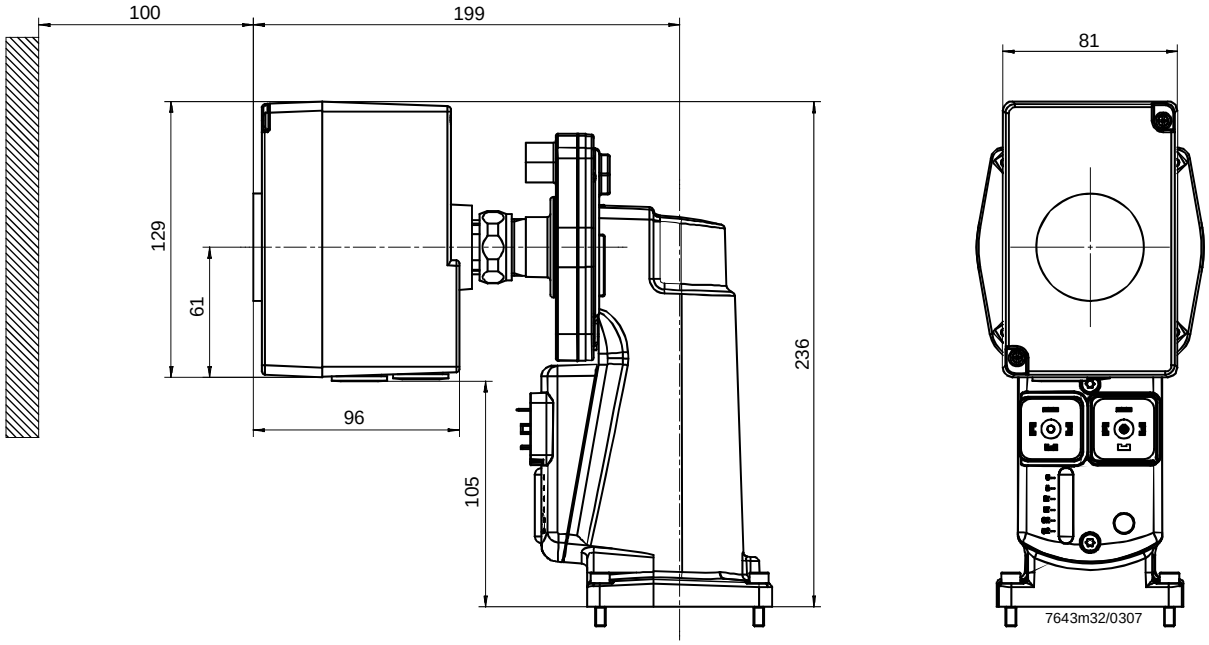

Dimensions in mm

Actuators SKP55...

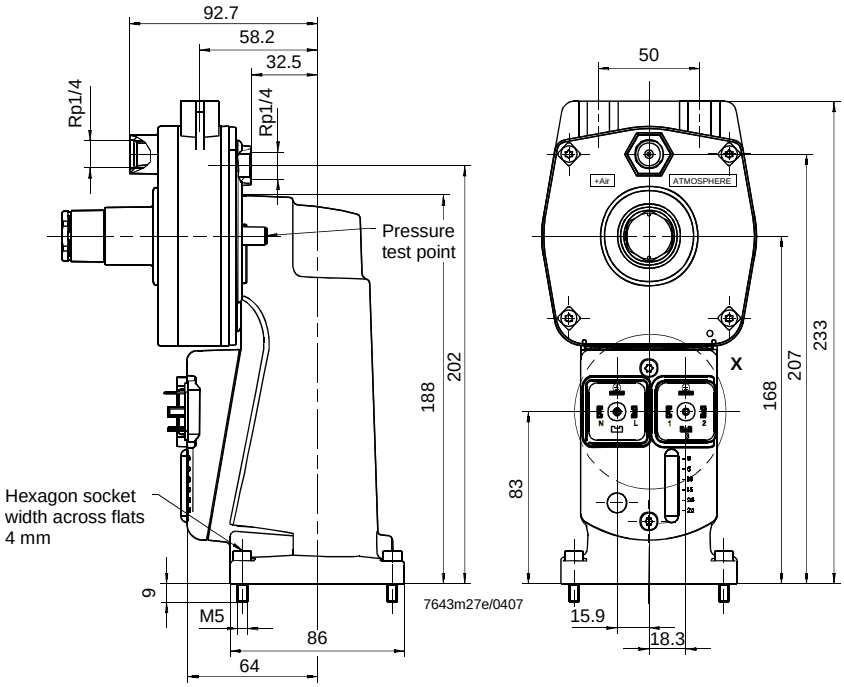

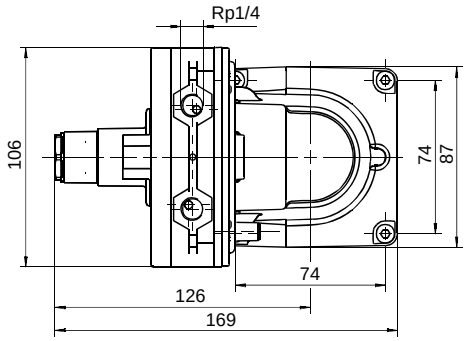

SKP55.001…

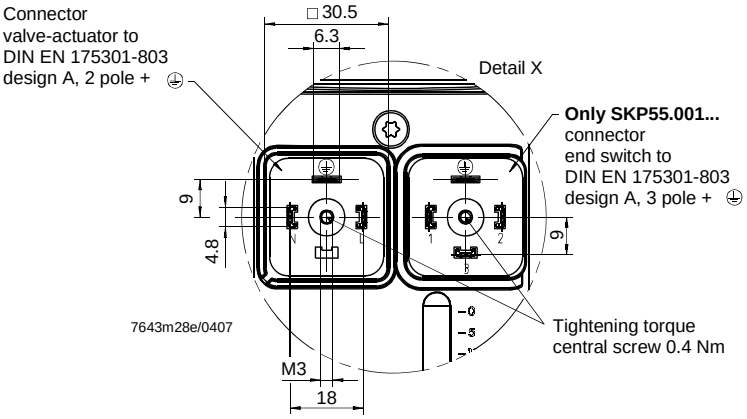

Dimensions in mm

Actuators SKP75...

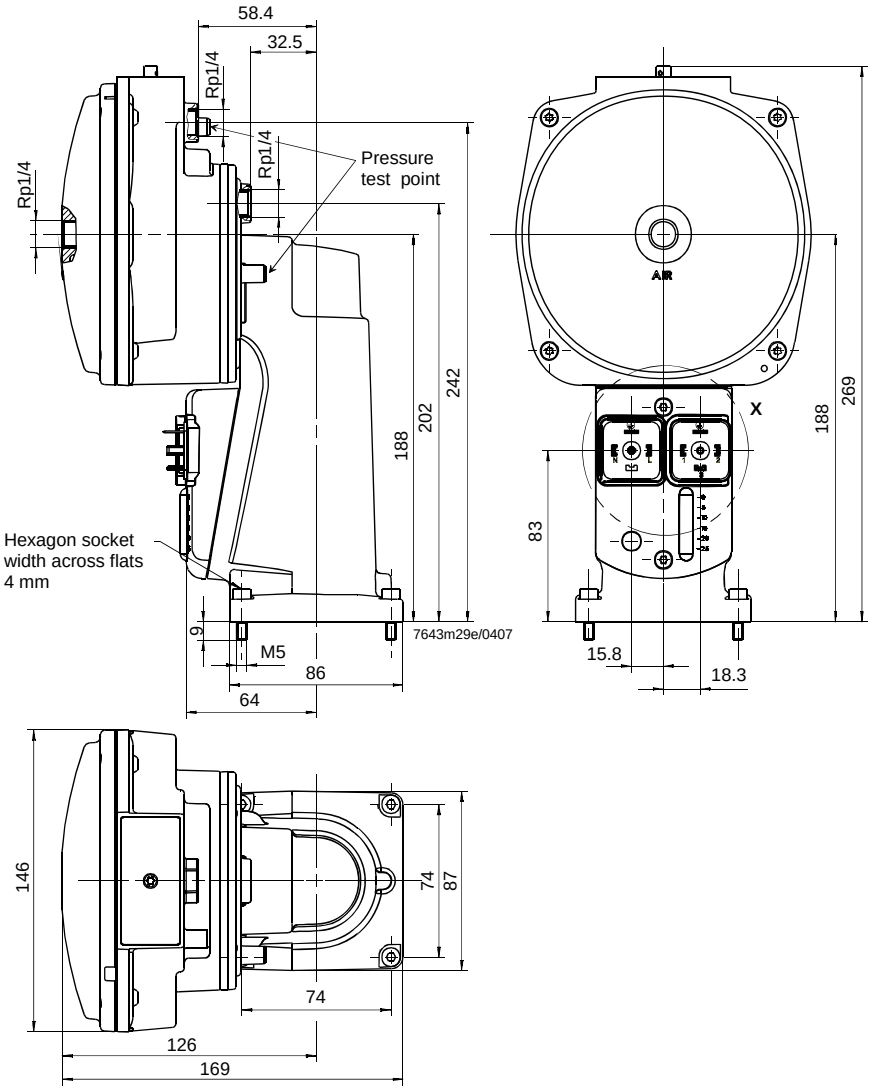

SKP75.001…

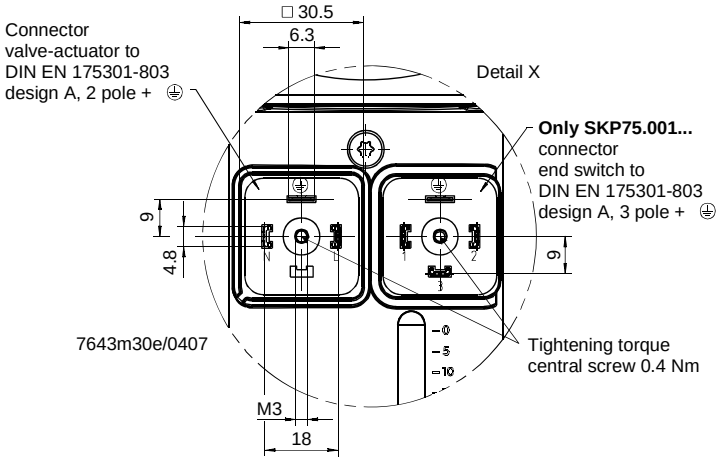

Dimensions in mm

Adapter plug
AGA62.000A000

- For 2 actuators mounted on one double valve

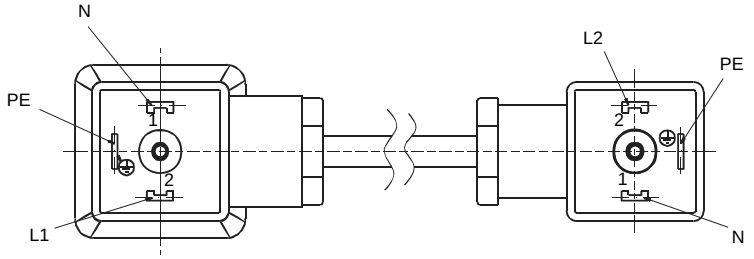

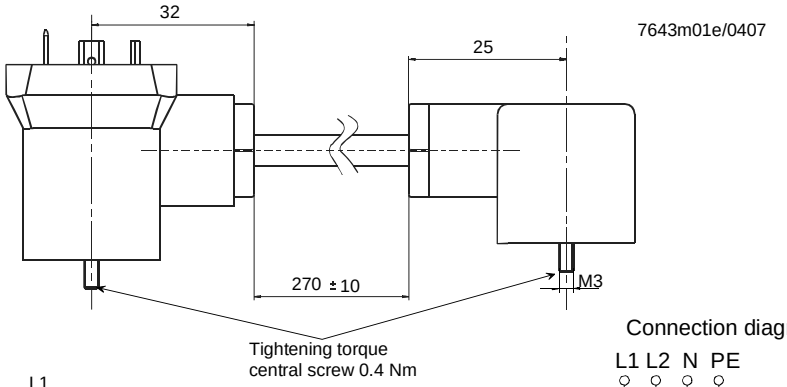

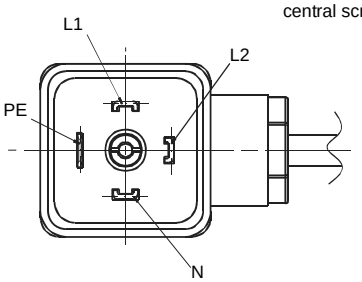

Connection diagram

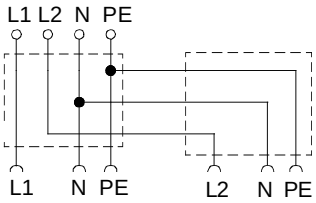

Dimensions in mm

Adapter plug
AGA62.2…
(only SKP25.2…)

- For 2 actuators mounted on one double valve

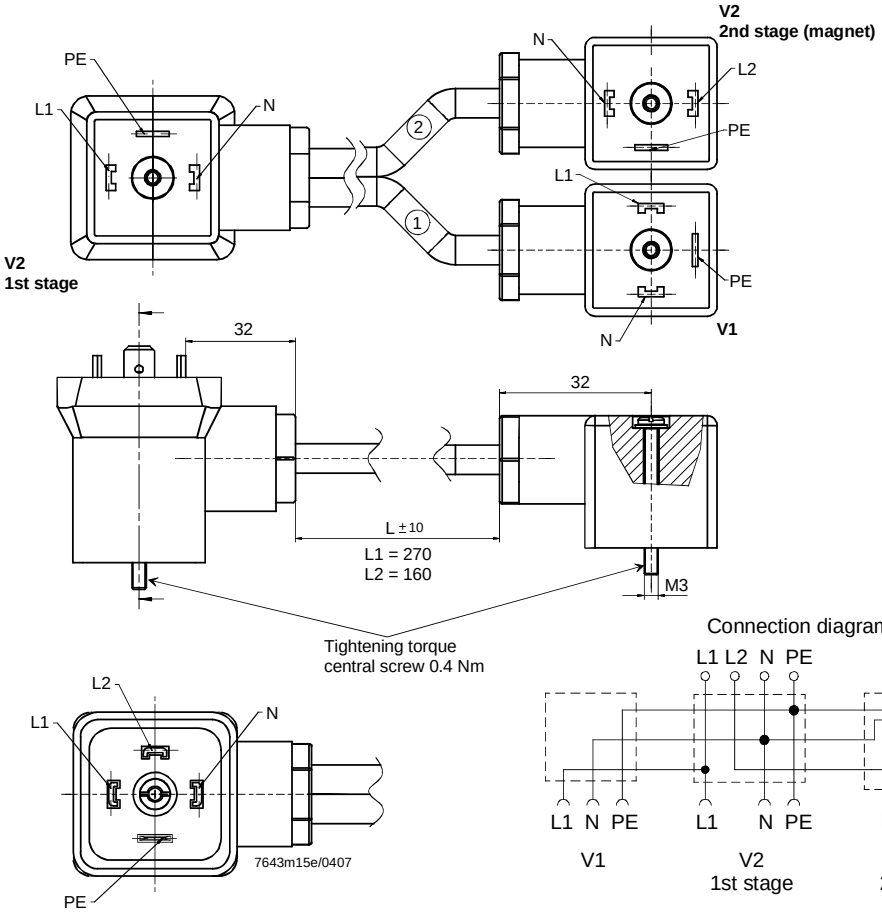

©2007 Siemens Building Technologies HVAC Products GmbH
Subject to change!