E6G* ... SERIES

SOLENOID GAS VALVES WITH 1/4" AND 3/8" CONNECTIONS AND OPERATING PRESSURE UP TO 1bar.

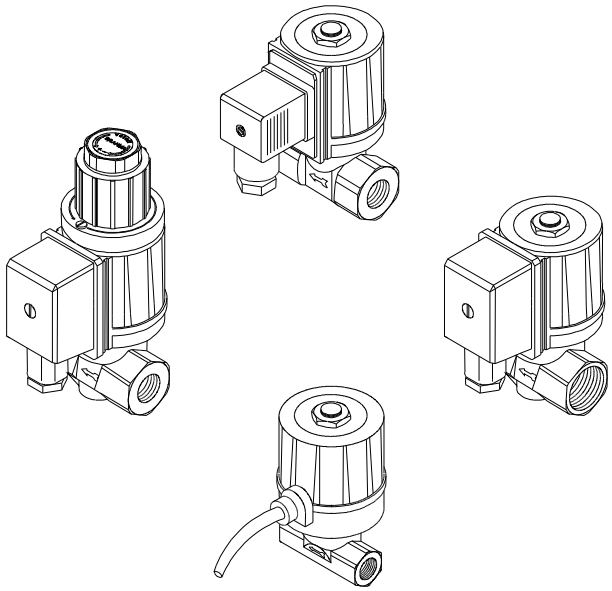

GENERAL DESCRIPTION

This series of solenoid valves are of normally closed type, suitable for civil and industrial applications, supplied with alternate or direct current. These valves are divided into two groups: with 8mm or 10mm orifice.

Gas valves, marked with "S" or "L" after type reference, have coil operating in direct current, which permitted to make its actions as silent as possible.

There is the possibility to have valves provided with inlet pressure plug or outlet pressure plug (excluding G1/4" connection ones) and, 10mm orifice only, valves equipped with hydraulic lag group, which permits slow opening; in this case it is also possible to have a quick and adjustable opening initial flow.

Gas valves of this series, conforming to EN161, have a CE type Certificate (CE Reg. N° 63AQ0626) in accordance to European Directives 90/396 and 93/68.

TECHNICAL FEATURES

Class:	A
Group:	2
Supply voltage (1):	230Vac / 50-60Hz 110Vac / 50-60Hz
Operating temperature:	-10°C / +60°C
Closing time:	≤ 1s
Opening time:	≤ 1s (quick opening versions only)
Mounting:	vertical and horizontal
Body:	die-cast brass

(1) Versions with different supply voltages are available.

INSTALLATION

- Respect the applicable national and European standards (e.g. EN60335-1) regarding electrical safety.
- Assemble the valve to the installation so that the arrow on the valve body has the same direction as the fuel flow.
- During the assembly of the valve to the installation piping, avoid twisting on the sheath and always use an hexagonal key to be fitted to the valve body.
- Make sure that no foreign matters have entered the valve body.
- Make sure that the max. fuel input pressure never exceeds the value appearing on the label.

DIRECTIONS FOR E6G*L... VALVES ADJUSTMENT

Flow adjustment
To adjust the gas flow, you have to remove one of the two screws used to fasten the lag group (the not enamelled one, marked with 4 in Fig.1) and rotate clockwise the whole group to reduce the flow or in the opposite direction to increase it.

Opening time adjustment
After removing the top protection, by rotating it counterclockwise, you have to act on the adjustment screw, marked with 1 in Fig.1; by rotating clockwise, the opening time becomes longer, by rotating in the opposite direction, the opening time becomes shorter.

Quick release initial flow adjustment
After removing the top protection by rotating it counterclockwise, if you rotate clockwise the nut marked with 2 in Fig.1, the initial release will be reduced; if you rotate the same nut counterclockwise, the initial release will be increased.

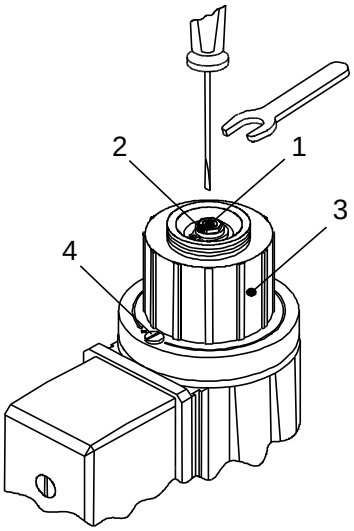

Fig.1

DIRECTIONS FOR E6G*SR... VALVES ADJUSTMENT

Flow adjustment
Rotate clockwise the screw marked with 1 in Fig.2 to reduce the flow, rotate in the opposite direction to increase the same.

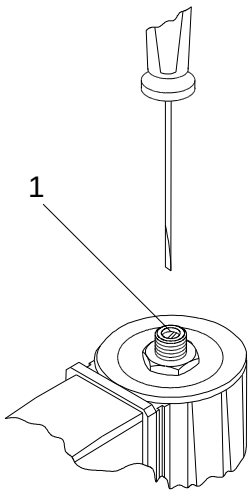

Fig.2

OVERALL DIMENSIONS

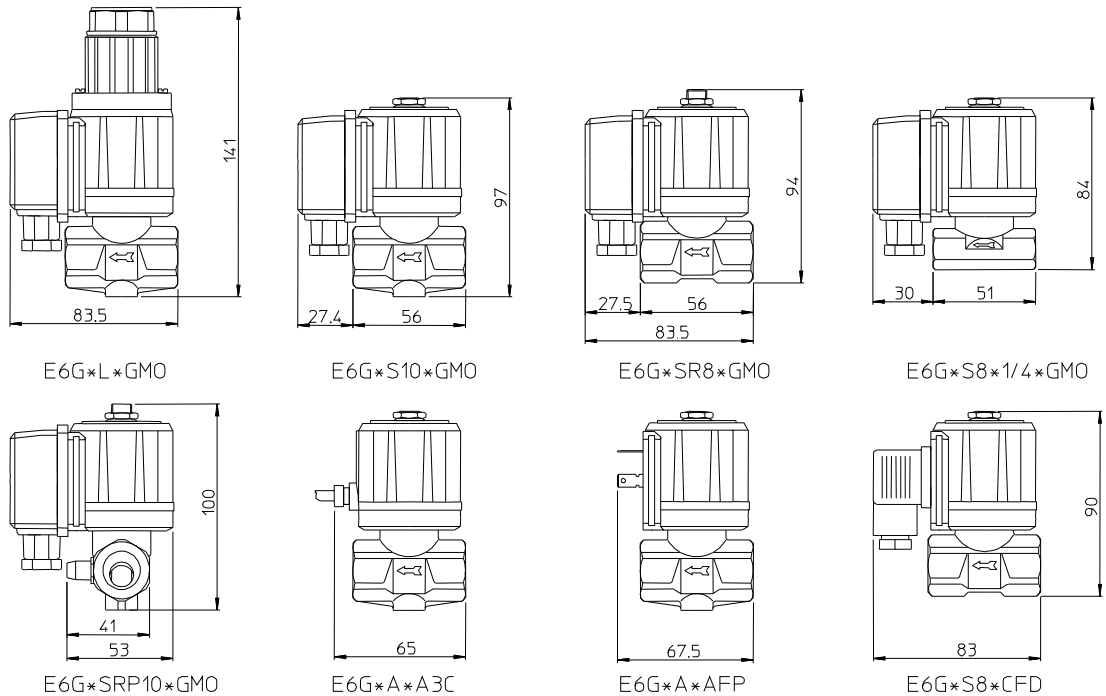

DIAGRAM

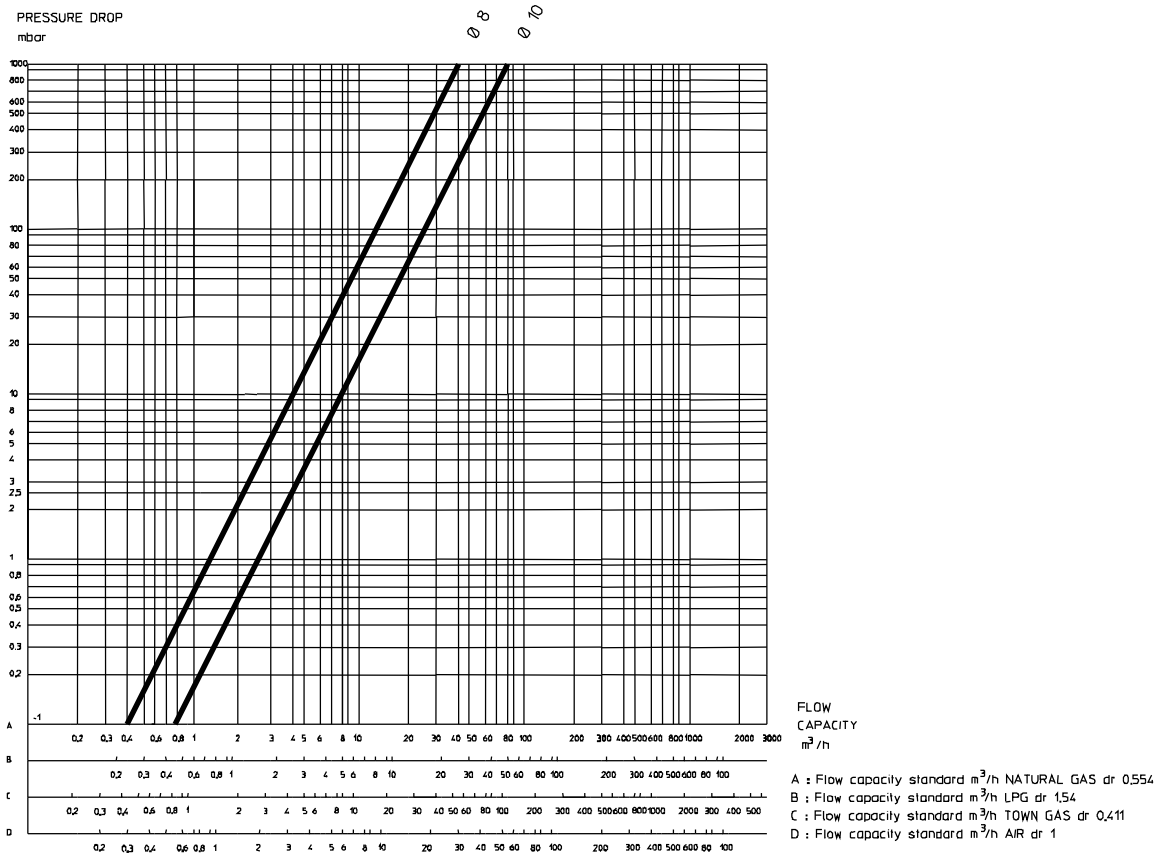

SUMMARY TABLE

Type	Operating pressure (mbar)	Orifice diameter (mm)	Connections	Weight (g)	Coil	Consumption (VA) 230Vac	Consumption (VA) 110Vac	Flow (m³/h gas with ΔP2.5mbar)	Possibility to fit pressure test point
E6G*S10	0 ÷ 500	10	G3/8"	760	BE6*G..	20	18	3.9	Yes
E6G*S10	0 ÷ 500	10	G1/2"	730	BE6*G..	20	18	3.9	Yes
E6G*S10	0 ÷ 500	10	G3/8"	740	BE6*CFD	20	18	3.9	Yes
E6G*S10	0 ÷ 500	10	G1/2"	710	BE6*CFD	20	18	3.9	Yes
E6G*SR10	0 ÷ 500	10	G3/8"	765	BE6*G..	20	18	3.9	Yes
E6G*SR10	0 ÷ 500	10	G1/2"	735	BE6*G..	20	18	3.9	Yes
E6G*SR10	0 ÷ 500	10	G3/8"	745	BE6*CFD	20	18	3.9	Yes
E6G*SR10	0 ÷ 500	10	G1/2"	715	BE6*CFD	20	18	3.9	Yes
E6G*L	0 ÷ 200	10	G3/8"	865	BE6*G..	20	18	3.9	Yes
E6G*L	0 ÷ 200	10	G1/2"	835	BE6*G..	20	18	3.9	Yes
E6G*S8	0 ÷ 1000	8	G1/4"	620	BE6*G..C	20	18	2	No
E6G*S8	0 ÷ 500	8	G3/8"	725	BE6*G..C	20	18	2	Yes
E6G*S8	0 ÷ 500	8	G1/2"	695	BE6*G..C	20	18	2	Yes
E6G*S8	0 ÷ 1000	8	G1/4"	640	BE6*G..	20	18	2	No
E6G*S8	0 ÷ 1000	8	G3/8"	745	BE6*G..	20	18	2	Yes
E6G*S8	0 ÷ 1000	8	G1/2"	715	BE6*G..	20	18	2	Yes
E6G*S8	0 ÷ 1000	8	G1/4"	620	BE6*CFD	20	18	2	No
E6G*S8	0 ÷ 1000	8	G3/8"	725	BE6*CFD	20	18	2	Yes
E6G*S8	0 ÷ 1000	8	G1/2"	695	BE6*CFD	20	18	2	Yes
E6G*SR8	0 ÷ 1000	8	G1/4"	625	BE6*G..C	20	18	2	No
E6G*SR8	0 ÷ 500	8	G3/8"	730	BE6*G..C	20	18	2	Yes
E6G*SR8	0 ÷ 500	8	G1/2"	700	BE6*G..C	20	18	2	Yes
E6G*SR8	0 ÷ 1000	8	G1/4"	645	BE6*G..	20	18	2	No
E6G*SR8	0 ÷ 1000	8	G3/8"	750	BE6*G..	20	18	2	Yes
E6G*SR8	0 ÷ 1000	8	G1/2"	720	BE6*G..	20	18	2	Yes
E6G*SR8	0 ÷ 1000	8	G1/4"	625	BE6*CFD	20	18	2	No
E6G*SR8	0 ÷ 1000	8	G3/8"	730	BE6*CFD	20	18	2	Yes
E6G*SR8	0 ÷ 1000	8	G1/2"	700	BE6*CFD	20	18	2	Yes
E6G*A10	0 ÷ 950	10	G3/8"	675	BE6*A3C	20	18	3.9	Yes
E6G*A10	0 ÷ 950	10	G1/2"	645	BE6*A3C	20	18	3.9	Yes
E6G*A10	0 ÷ 950	10	G3/8"	695	BE6*AFD	20	18	3.9	Yes
E6G*A10	0 ÷ 950	10	G1/2"	665	BE6*AFD	20	18	3.9	Yes

TYPE REFERENCE

E6G * S R P 10*½ * G FD 7 230/50-60

Type

Opening type (fast/slow)

Ref.	Description
A	Fast opening valve.
S	Fast, silent opening valve.
L	Slow, silent opening valve (this version is inclusive of flow adjuster).

Flow adjustment

Valve fitted with equipment for flow adjustment.

Pressure plug
Valve inclusive of pressure plug.

Body Type

Body	Connections	Orifice
8*1/4	G1/4”	8 mm
8*3/8	G3/8”	8 mm
8*1/2	G1/2”	8 mm
10*3/8	G3/8”	10 mm
10*1/2	G1/2”	10 mm

Supply voltage

Ref.	Description
110/50-60	110Vac/50-60Hz
230/50-60	230Vac/50-60Hz

Test pressure point positin

Ref.	Position
5	Outlet left
6	Outlet right
7	Inlet left
8	Inlet right

Connecion type

Type	Description
2C	Connection with two core cable-IP65.
3C	Connection with three core cable- IP65.
FP	Connection with flat fast-on.
FD	Connection with fast-on for plug DIN43650-IP65 (GFD IP40).
MO	Connection with terminal board-IP54.
MOC	Connection with terminal board (short conveyors)-IP54.

Winding type

Type	Description
A	Supply in alternate current.
C	Supply in direct current.
G	Supply in alternate current, but valve operates in direct current thanks to an embodied rectification bridge.

BRAHMA S.p.A.
Via del Pontiere, 31
37045 Legnago (VR)
Tel. +39 0442 635211 - Telefax +39 0442 25683 - 635256
http://www.brahma.it
E-mail : brahma@brahma.it

02/06/10 Subject to amendments without notice