SIEMENS

7631

ISO 9001

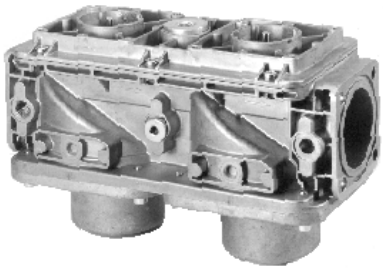

VGD20...

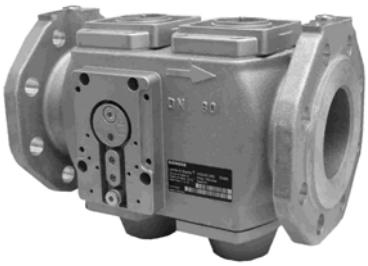

VGD40...

Double Gas Valves

VGD20...
VGD40...

Double gas valves for use on gas trains, consisting of 2 class «A» safety shutoff valves.
Suited for use in connection with gases of the gas families I...III.
The double gas valve is to be combined with 2 actuators of the SKP… line (e.g. to provide the functions of 2 safety shutoff valves connected in series, with different types of gas pressure governor if required).
For supplementary Data Sheets on the actuators, refer to «Use».

The VGD20.../VGD40... and this Data Sheet are intended for use by OEMs which integrate the double gas valves in their products.

Use

The double gas valves are used primarily on gas trains for burners.

In combination with the SKP… actuators, the gas valve also serves as a:
- Shutoff valve (in connection with the SKP10...)
- Control valve with shutoff function (in connection with the SKP20..., SKP27..., SKP50... or SKP70...)

For description and function of the SKP... actuators, refer to the following Data Sheets:

SKP10.../SKP20...	Data Sheet 7641
SKP11...	Data Sheet 7639
SKP27...	Data Sheet 7644
SKP50...	Data Sheet 7648
SKP70...	Data Sheet 7651

The double gas valves are designed for use with gases of the gas families I...III and with air. Double gas valves in combination with SKP... actuators open slowly and close rapidly. All types of VGD... can be randomly combined with the SKP...

Warning notes

To avoid injury to persons, damage to property or the environment, the following warning notes should be observed!

Do not open, interfere with or modify the double gas valve, except when fitting the service replacement set!

- When used in connection with gas, the valves constitute part of the entire safety system
- Fall or shock can adversely affect the safety functions. Such valves may not be put into operation, even if they do not exhibit any damage.

Engineering notes

Profile

Only VGD20...

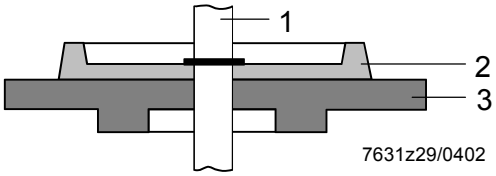

Legend

1 Stem
2 Profile
3 Valve disk

VGD20... / VGD40...

Protect the actuator against excessive temperatures (caused by radiation, for example), to ensure the maximum permissible ambient temperatures will not be exceeded.

Mounting notes

- Ensure that the relevant national safety regulations are complied with
- To mount the double gas valve VGD20..., 2 flanges type AGA41... / AGA51... are required
- To prevent cuttings from falling inside the valve, first mount the flanges to the piping and then clean the associated parts

Mounting position

- On the gas train, the valve can be mounted in any position, but the permissible mounting positions of the associated actuator must be observed (refer to the relevant Data Sheet)

Direction of flow

- The direction of gas flow must be in accordance with the arrow on the valve body

When used in combination with the SKP20..., SKP27..., SKP50... or SKP70..., the minimum gas pressure switch must always be mounted upstream of the double gas valve!

VGD20...

- The electrohydraulic SKP10... actuator, which is used for shutoff functions, must always be mounted on the inlet side while the actuators with integrated governor (SKP20..., SKP27..., SKP50... or SKP70...) must always be fitted on the outlet side of the valve (with a contoured disk). When using a 2-stage SKP10.123... actuator in connection with an actuator with governor, mount the SKP10.123... on «V2». The actuator with governor (e.g. SKP20...) is then to be mounted on «V1»

Tightness

- Check to ensure the bolts on the flanges are properly tightened
- Check to ensure the connections with all components are tight
- Mounting and replacement of the actuator can take place while the valve is under pressure
- Sealing materials are not required

VGD20...

- Ensure that the O-rings are fitted between the flanges and the valve body

VGD40...	• Ensure that the gaskets are fitted between the flanges
Function	Stem retracts → valve opens Stem extends → valve closes

Installation notes

	• Installation work must be carried out by qualified staff
Gas pressure	• If the available gas pressure exceeds the valve's maximum permissible operating pressure, the gas pressure must be reduced by a pressure regulator upstream of the valve

Commissioning notes

- Commissioning work must be carried out by qualified staff
- If environmental conditions produce corrosion (e.g. sea climate), apply protective coating
- Check wiring carefully prior to commissioning

Standards

CE conformity in accordance with the directives of the European Union
- Directive for pressure equipment 97/23 EEC
- Directive for gas appliances 90/396 EEC

Service notes

- Check the correct functioning and the internal and external tightness of the VGD... each time a valve has been replaced
- The valve may only be replaced by qualified staff

Disposal

Local and currently valid legislation must be observed.

VGD20...

The double gas valves VGD20... are of the normally closed type and have 2 disks, one noncontoured disk on the inlet side and one contoured disk on the outlet side. The stems are guided on both sides of the disks, thus ensuring precise alignment and tight shutoff. The high closing force of the return spring is supported by the prevailing gas pressure (class «A» to EN 161). A strainer on the inlet side protects the valve and downstream controls against dirt. Valve body and connecting flanges are made of die-cast aluminium, the seals of nitril rubber, and the stems of stainless steel. The double gas valves feature a pilot gas connection Rp¾" (refer to «Type summary» and «Dimensions»). Gas valve, flanges and actuators are supplied as separate items. The 4 screws required to fit the SKP... to the valve are contained in the terminal compartment. No special tools are required for assembly.

Connecting flanges AGA41 / AGA51 for VGD20...

The connecting flanges have a test point.
They are **internally threaded** and supplied as separate items, together with the necessary accessories, such as bolts, nuts, seals, etc.
The overall flange dimensions and bore-holes are identical, so that all types of flanges can be fitted to the double gas valve, irrespective of nominal size.
This means that a 1½" flange can be fitted to a 2" VGD... valve, and vice versa.
Each double gas valve requires 2 connecting flanges, which are to be ordered as **separate** items.

Sectional view of the VGD20...

Operating principle

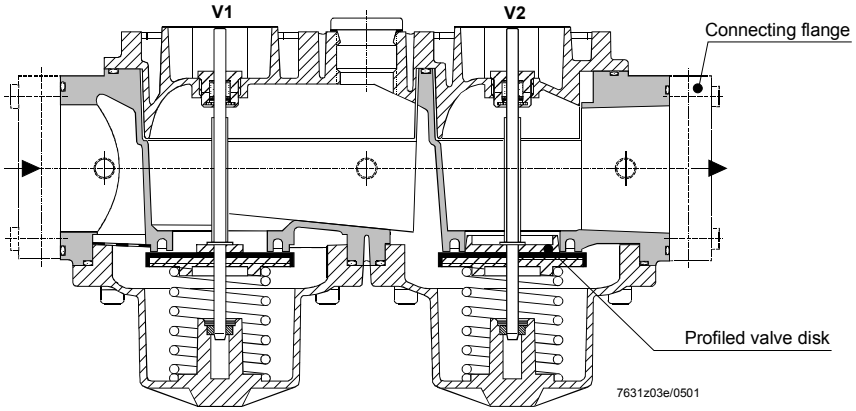

Application example

VGD20... with SKP10... and SKP70... (mounted on «V2»)

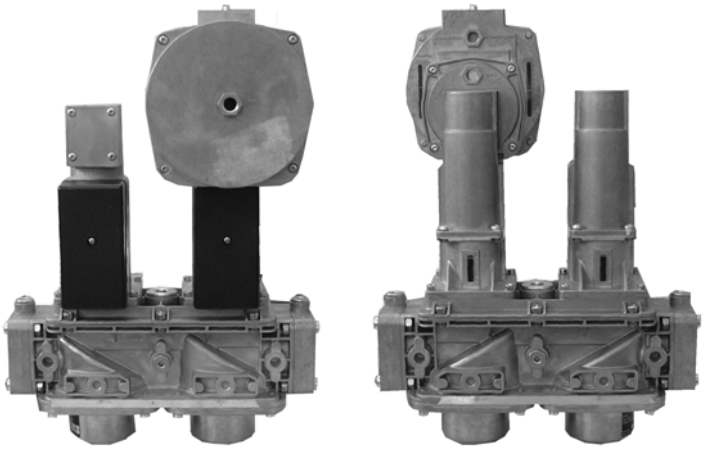

VGD40...

The double gas valves VGD40... are double seat disk valves of the normally closed type. The stems are guided on both sides of the disks, thus ensuring a precise stroke and tight shutoff. To improve the control performance, the disks at the bottom are profiled. The patented double seats are closed by 2 springs. The high closing force of the return spring is supported by the prevailing gas pressure (class «A» to EN 161). The spring of each stem exerts a pressure on the disk so that there is a defined closing force acting on each disk. The surface area proportions of the 2 valve disks per stem are such that the closing force increases as the inlet pressure increases (class «A» valve to EN 161). A strainer on the inlet side protects the valve and downstream controls against dirt. The 4 screws required to fit the SKP... to the valve are contained in the terminal compartment. The double gas valves DN40…150 correspond to the standard valve sizes of single valves (EN 558).

Sectional view of the VGD40...

Operating principle

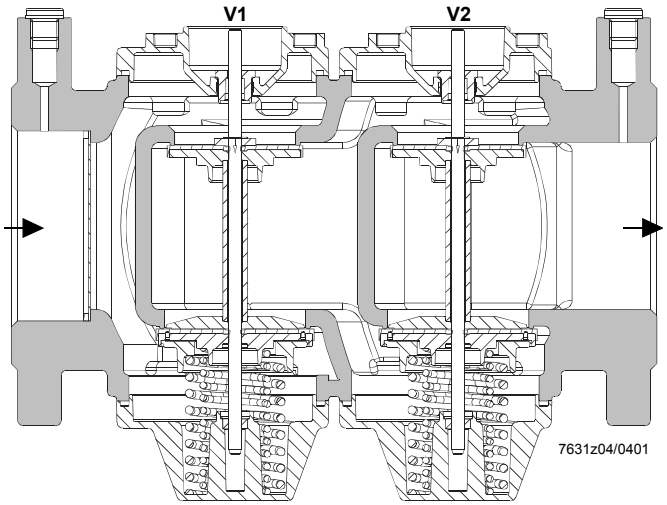

The VGD40... are supplied with a pilot gas flange having a ¾“ connection for the pilot gas line and a ¼“ connection for an impulse line.
This impulse line connection between the 2 valves and another impulse line connection on the outlet flange can be connected directly to the constant pressure governor SKP20... fitted to «V1» or «V2».
A universal mounting plate facilitates attachment of a number of commercially available pressure switches or valves proving devices.
Both the pilot gas flange and the universal mounting plate are exchangeable and can be fitted on either side of the valve.

Application example

VGD40.080 with SKP10... and SKP20... (mounted on «V2»).

Type summary

Double gas valves

DN	Flow rate at Δp = 10 mbar m³ / h air [1])	Type reference
1 ½“	85	**VGD20.403**
2“	100	**VGD20.503**
40	85	**VGD40.040**
50	100	**VGD40.050**
65	160	**VGD40.065**
80	250	**VGD40.080**
100	400	**VGD40.100**
125	580 (630 [2]))	**VGD40.125**
150	700 (800 [2]))	**VGD40.150**

[1]) Flow rate to EN 161

[2]) Only for VGD40...: Flow rate of future SKP...line

Accessories

Flanges

For use with VGD20... with test point Rp ¼“
(to be ordered as separate items)

Type	DN [1])	For double gas valve
AGA41	1 ½“	**VGD20.403**
AGA51	2“	**VGD20.503**

[1]) Internally threaded to ISO R 7/1

Service replacement sets
(for VGD20... only)

Consisting of:
Stems, disks, strainer and screws, washers and seals:

For double gas valve	Part number
VGD20.403	**4 679 1550 0**
VGD20.503	**4 679 1550 0**

Any opening of the valve, replacement of parts, or changes to the original design is your responsibility and is undertaken at your own risk!

Ordering

Valve and actuator are supplied as separate items.

VGD20... only

When ordering, please give type references of double gas valve and flanges.

Example:
Double gas valve 2“ with 2 connecting flanges
1 VGD20.503
2 AGA51
The SKP... actuators are to be ordered as separate items.

VGD40... only

When ordering, please give type reference of the double gas valve.

Example:
Double gas valve DN80
1 VGD40.080
The 2 lateral mounting plates for the pilot gas connection and a universal adapter plate are included and ready fitted.

The SKP... actuators are to be ordered as separate items.

Technical data

General data

Class	A (EN 161)
Group	2 (EN 161)
Types of gases	gas families I, II, III (to G260 of DVGW) air
Built-in strainer, mesh size	0.9 mm
Flow rates	refer to «Flow chart»
Perm. medium temperature	-15...+60 °C
Mounting	spring housing horizontal or vertical, pointing downward
Flanges for VGD40...	to ISO 7005; PN16
Materials	
- VGD20...	die-cast aluminium
- VGD40...	sand-cast aluminium
Net weight	
- VGD...	refer to the table below
- AGA41	approx. 266 g
- AGA51	approx. 264 g
Operating pressure	refer to «Type summary»

Max. permissible gas pressure:

Double gas valve	**Static pressure (mbar)** (with double gas valves closed)	**Dynamic** (perm. operating pressure, mbar)	**Weight** (approx. kg)	**Volume between V1 / V2** (liters)
VGD20.403	600	600	3.2	0.75
VGD20.503				0.8
VGD40.040	1200	1000	7	
VGD40.050			7.2	
VGD40.065		700	8.4	1.3
VGD40.080			9.6	1.5
VGD40.100			12.9	3
VGD40.125			18.2	5.2
VGD40.150			24.1	8.7

VGD40...

In the burner's standby mode, the VGD40… withstand pressures up to 1,500 mbar.
At a pressure of 1,500 mbar, the VGD40… remains safely closed or will safely close when shutdown is initiated by an upstream pressure signal.
The proper functioning and outer tightness will not be affected.

Note:
Owing to the design of the VGD40…, increasing inlet pressure causes the valve to close (class «A» to EN 161).

Safety shutoff devices or venting devices that – in addition to the high pressure controller – are normally used for protecting the gas valve on the burner are therefore no longer required if the following conditions are met:
When, in the event the high pressure controller upstream of the valve fails, a pressure of 1500 mbar at the inlet of the VGD40… is not exceeded and, in the event the permissible operating pressure of the VGD40… is exceeded (DN65…150: 700 mbar, and DN40…50: 1,000 mbar), a shutoff device (e.g. gas pressure switch) causes the VGD40… to close.

Environmental conditions

Transport	IEC 60 721-3-2
Climatic conditions	class 2K2
Mechanical conditions	class 2M2
Temperature range	-15...+60 °C
Humidity	< 95 % r.h.
Operation	IEC 60 721-3-3
Climatic conditions	class 3K6
Mechanical conditions	class 3M2
Temperature range	-10...+60 °C
Humidity	< 95 % r.h.

Condensation, formation of ice and ingress of water are not permitted!

Actuators

The valves can be combined with the following types of actuators:

1) Closing time ≤ 1 s together with valve also for gas

Type reference	Data Sheet	Function
SKP10...	7641	ON / OFF [1)]
SKP11...	7639	ON / OFF [1)]
SKP20...	7641	ON / OFF with constant pressure control / equal pressure control [1)]
SKP27... / SQS27...	7644	ON / OFF with pressure control and setpoint readjustment via an electrical signal [1)]
SKP50...	7648	ON / OFF with ratio control, signal input → differential pressure [1)]
SKP70...	7651	ON / OFF with ratio control, signal input → static pressure [1)]
SQX31.../AGA60	4551	3-position modulating control ⇒ cannot be used as a safety shutoff valve

Flow chart of VGD…

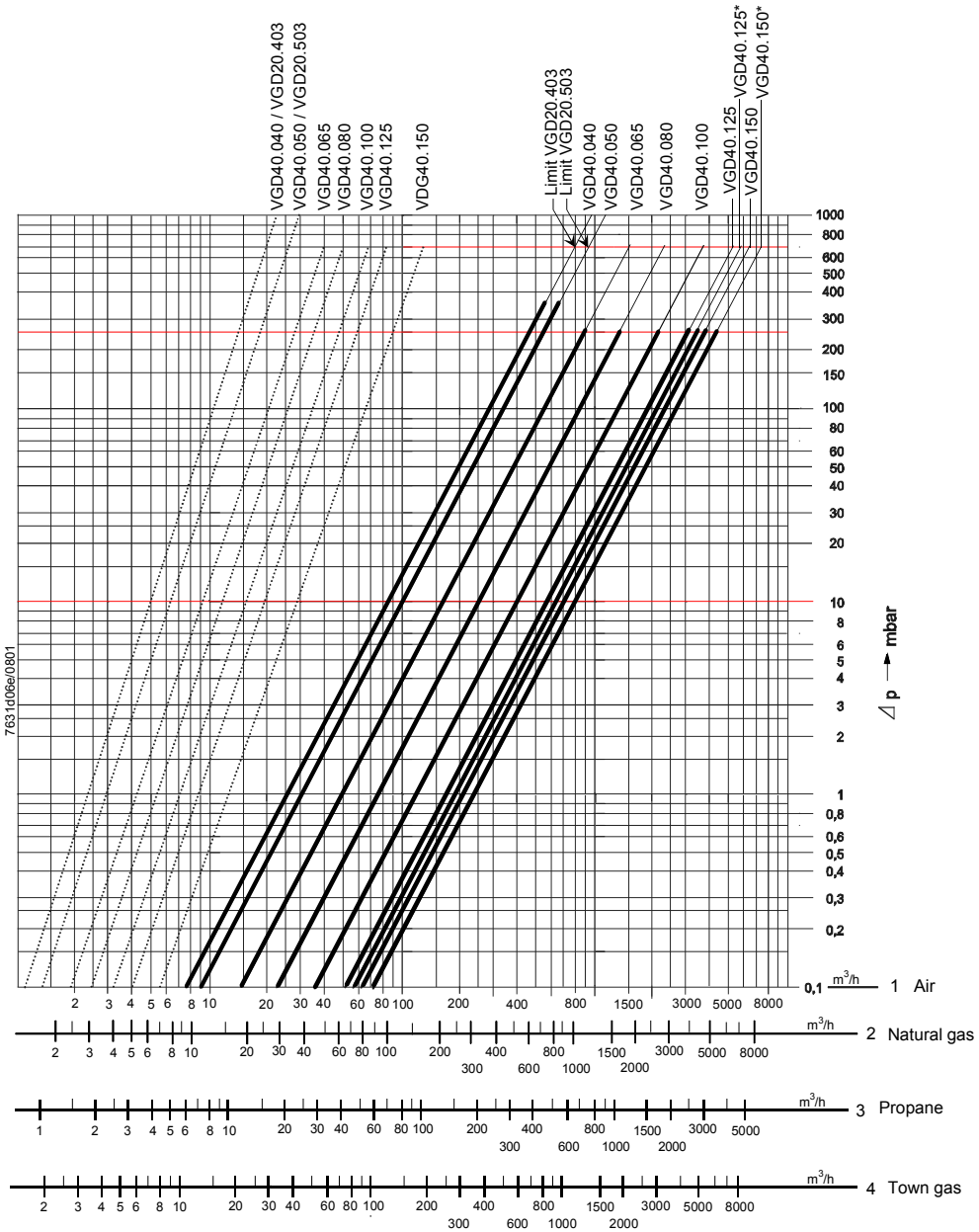

Legend:

*	Characteristic available only in connection with the future SKP… line
·····	Minimum flow characteristics
——	Maximum flow characteristics (valve fully open)

Practical experience shows that applications in the range confined by the bold characteristics (max. 70 m/s) do not produce significant noise levels.

Note:

- In the case of burners with small low-fire volumes, select a tightly sized valve (refer to SKP… Data Sheets)
- If the gas pressure exceeds the maximum permissible operating pressure, reduce it with a pressure controller upstream of the valve
- The pressure drop (at maximum flow) is based on a fully open valve

Conversion of air volume to a corresponding gas volume (natural gas)

Basis of scale

Abcissa	Medium Volumetric flow QG in m³ / h	Density ratio dv to air	Conversion factor $f = \sqrt{\frac{1}{d_v}}$
1	Air	1	1
2	Natural gas	0.61	1.28
3	Propane	1.562	0.8
4	Town gas	0.46	1.47

Conversion to air (m³ / h) from other types of gases:

$$QL = \frac{QG}{f}$$

QL = amount of air m³ / h producing the same pressure drop as «QG»

Example: Recommended working range (extract of flow chart VGD…)

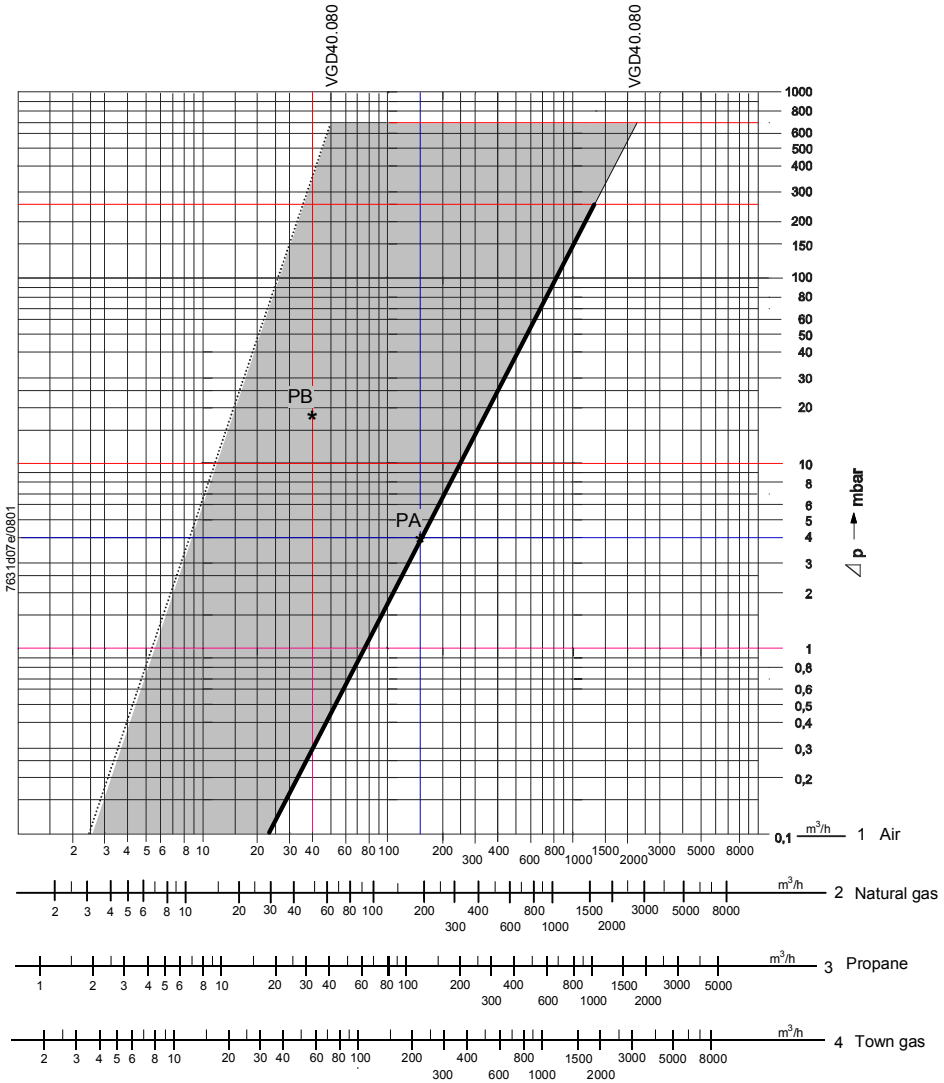

Legend:
····· Minimum flow characteristics (can vary, depending on the quality of the pressure test points)
—— Maximum flow characteristics (valve fully open)
Points «PA / PB», refer to «Sizing examples» below
PA / PB = working points

Function

VGD20... / VGD40...

Simplified sizing example based on above chart:

VGD... with SKP70...

Prerequisite	Burner's gas outlet towards the combustion chamber
Simplified example: constant combustion chamber pressure	= 0 mbar
Required control ratio	RV = 4:1
Gas inlet pressure	20 mbar

1. **High-fire**
   Burner pressure at nominal load 16 mbar
   Volumetric flow at nominal load 200 m³ / h natural gas, corresponding to 156 m³ / h air
   - ΔpVGD40.080 at nominal load 20-16 = 4 mbar
   → Point «PA» in the highlighted area
   Point «PA» must be on or to the left of the maximum flow characteristic
2. **Low-fire**
   $$PG\min = \frac{PG\max}{RV^2} = \frac{16\,mbar}{16} = 1\,mbar$$ (Δp chart = 20 – 1 = 19 mbar)
   $$VGmin = \frac{VGas\ max}{RV} = \frac{200\ m^3/h}{4} = 50\ m^3$$ corresponding to h = 39 m³ / h air
   → Point «PB» in the highlighted area
   - Selected valve size VGD40.080
   Point «PB» must be on or to the right of the minimum flow characteristic.

Combinations of VGD40... and actuator (here with the SKP10... and SKP20...)

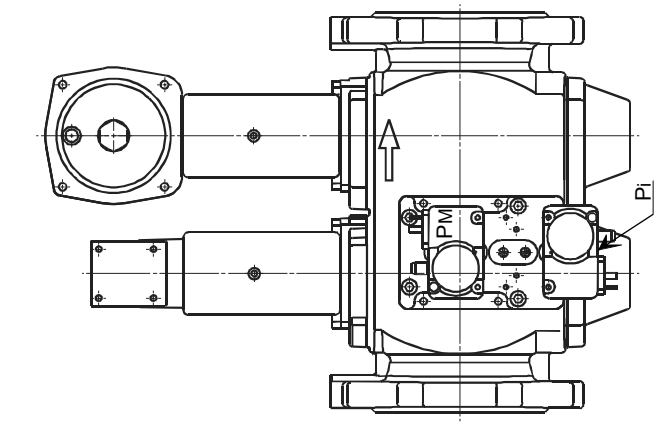

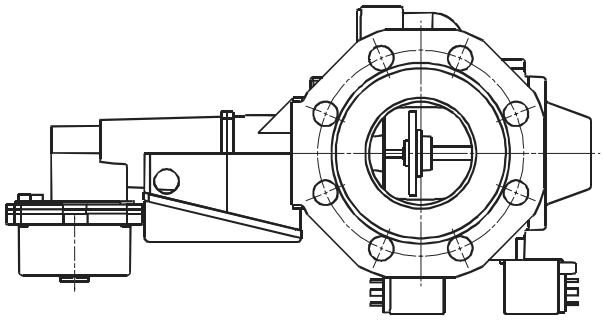

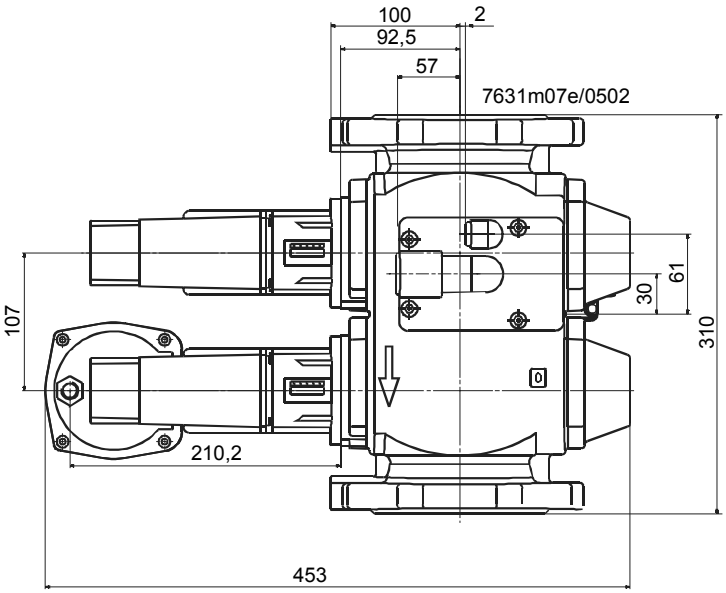

Valve proving device "A" and pressure switch (Pi)

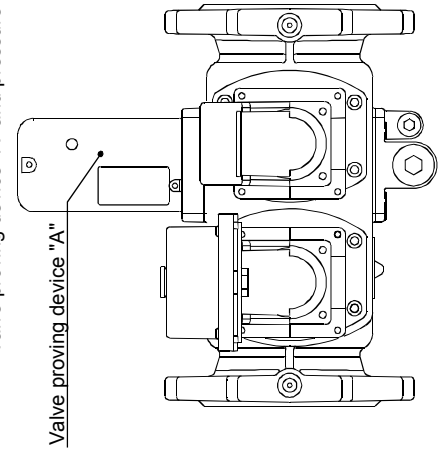

Valve proving device "A" and pressure switch (Pi)

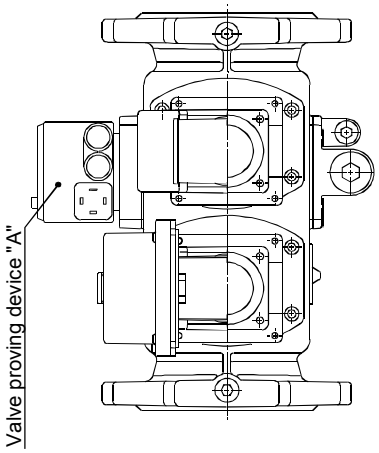

Ancillary units

2 pressure switches (PM, Pi)

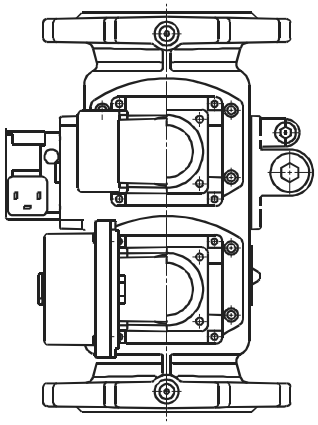

(Some ancillary units are non - Siemens HVAC products)

Legend

Pi Inlet pressure upstream of valve 1

PM Intermediate chamber pressure upstream of valve 2

Dimensions (not to scale)

VGD20...

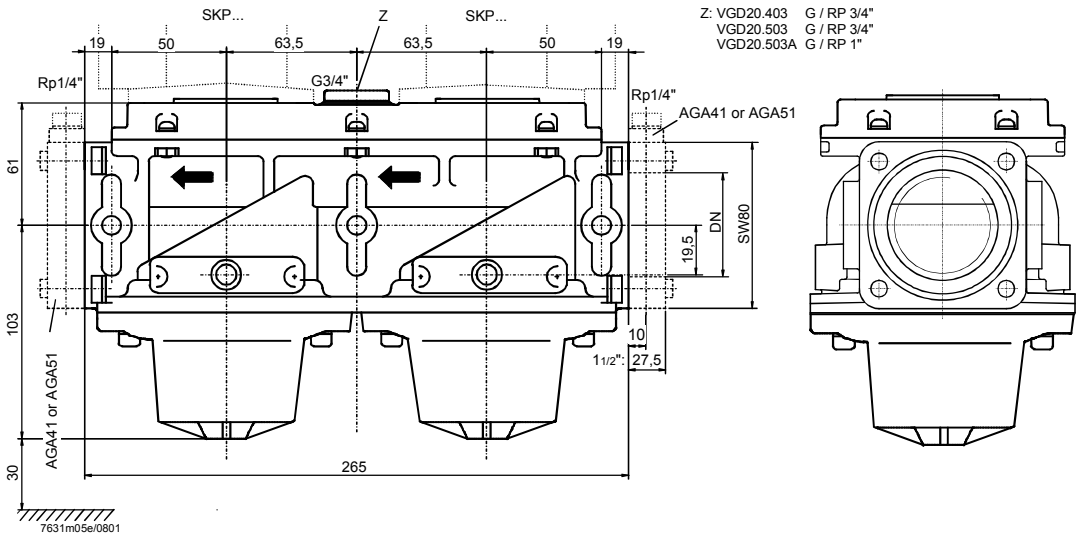

VGD40...

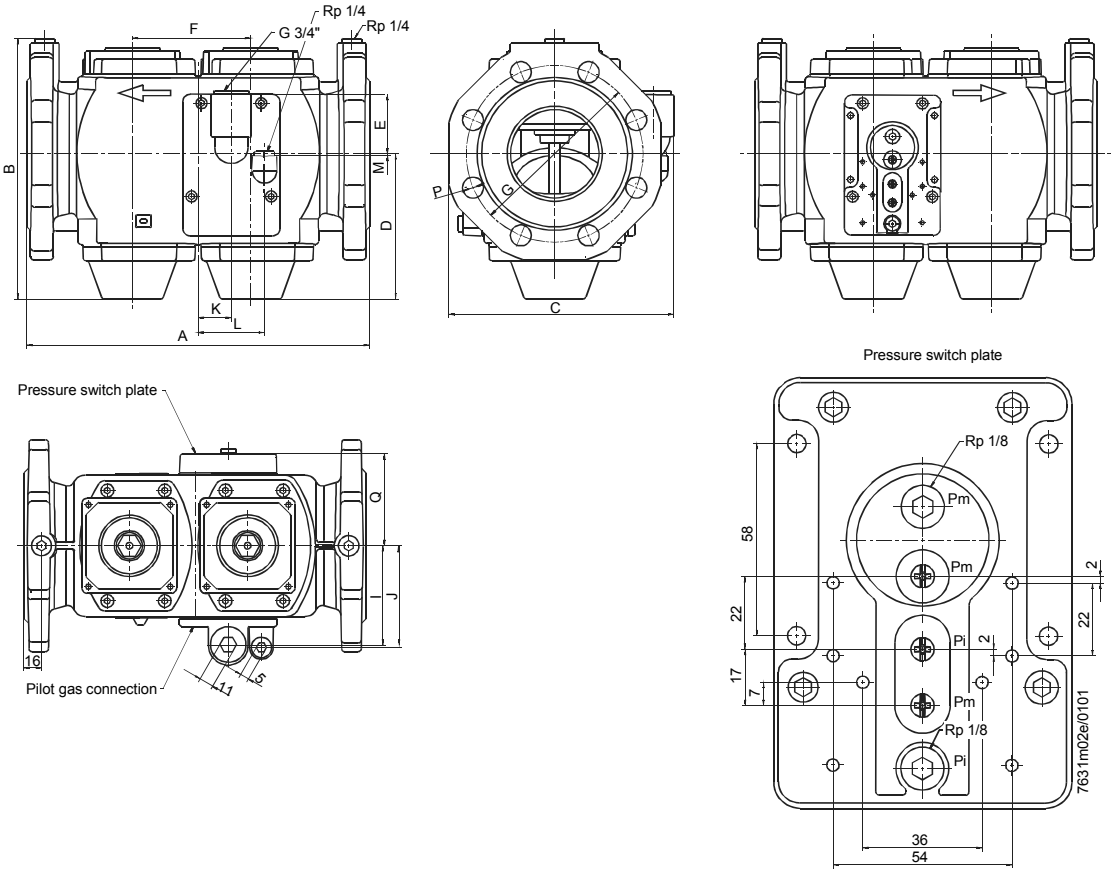

Dimensions

Type reference	DN	A	B	C	D	E	F	G	I	J	K	L	M	P	Q
VGD40.040	40	240	195	168	115	58	88	110	77	79	20	50	2	19	70
VGD40.050	50	240	202	174	115	58	88	125	77	79	20	50	2	19	70
VGD40.065	65	290	215	194	118	60	102	145	87	90	30	60	4	19	81
VGD40.080	80	310	236	204	132	54	107	160	90	92	30	60	2	19	88
VGD40.100	100	350	259	227	145	43	131	180	105	108	41	71	13	19	99
VGD40.125	125	400	305	255	175	31	150	210	119	122	41	71	25	19	113
VGD40.150	150	480	335	293	188	20	168	240	140	143	39	69	36	23	134

©2002 Siemens Landis & Staefa Produktion GmbH
Subject to change