SIEMENS

7153

ISO 9001

Oil Burner Controls LAL...

Oil burner controls

- **With or without air pressure supervision for checked air damper control**
- **Flame supervision with**
  – photoresistive detector QRB1..., or
  – blue-flame detector QRC1..., or
  – selenium photocell detector RAR...

The LAL... and this Data Sheet are intended for OEMs which integrate the oil burner controls in their products!

Use

- For the control and supervision of oil atomization burners
- For burners of medium to high capacity
- For intermittent operation (at least one controlled shutdown every 24 hours)
- Can be universally used with multistage or modulating burners
- Suited for use with stationary air heaters

LAL1...	- Yellow- and blue-flame burners without air pressure supervision
LAL2...	- Yellow-flame burners with air pressure supervision
LAL3.25	- For special applications, e.g. burners of incinerator plants (for details, refer to «Type summary» and «Notes»)
LAL4...	- Yellow- and blue-flame burners with air pressure supervision

For burner controls used in connection with burners for continuous operation, refer to Data Sheet 7785 (LOK16...).

To avoid injury to persons, damage to property or the environment, the following warning notes should be observed!

Do not open, interfere with or modify the unit!

- Before performing any wiring changes in the connection area of the LAL…, completely isolate the burner control from the mains supply (all-polar disconnection)
- Ensure protection against electric shock hazard by providing adequate protection for the burner control's connection terminals
- Check to ensure that wiring is in an orderly state and that the wires are firmly connected
- Press the lockout reset button / operation button only manually (applying a force of no more than 10 N), without using any tools or pointed objects
- **Do not press the lockout reset button on the unit or the remote reset button for more than 10 seconds since this damages the lockout relay in the unit**
- Fall or shock can adversely affect the safety functions. Such units may not be put into operation, even if they do not exhibit any damage

Engineering notes

- Install switches, fuses, earthing, etc., in compliance with local regulations
- Connect valves and other plant components as specified in the burner manufacturer's documentation

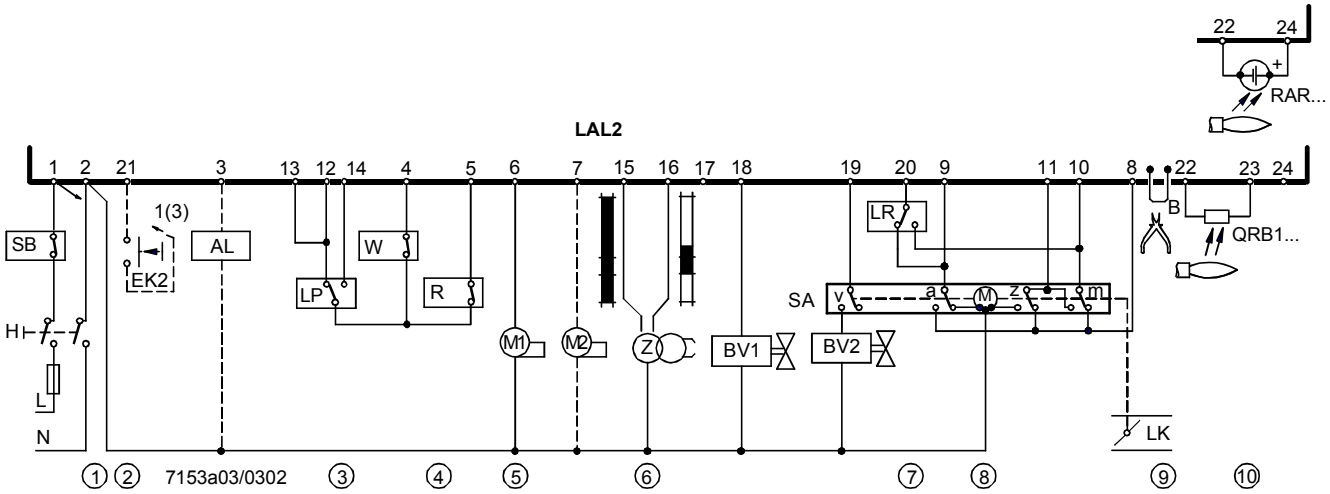

①	Connect safety limit thermostats (manual reset) in the line (e.g. «SB»)
②	Remote reset When connecting lockout reset button «EK2» between terminals 21 and - 3: For remote reset only - 1: For remote reset and remote emergency shutdown
③	With LAL…: Required switching capacity of - switching devices connected between terminals 4 and 5 (refer to «Technical data»)
	With LAL2... / LAL3... / LAL4...: Required switching capacity of - switching devices connected between terminal 12 and «LP» (refer to «Technical data») - «LP» (refer to «Technical data»)
④	When using series connection, the control contacts of other devices contained in the burner plant must be connected as follows:
	To terminal 4 or 5 → contacts that must be closed from startup to controlled shutdown → otherwise no startup or shutdown
	To terminal 12 (not with LAL1...) → contacts that must only be closed on startup → otherwise no startup
	To terminal 14 (not with LAL1...) → contacts that must be closed no later than at the beginning of «t3» or «t3´» and that must remain closed until controlled shutdown occurs → otherwise lockout
⑤	Maximum current draw, refer to «Technical data»
⑥	«Z» connected to terminal 15 → «t3´» and «t3n»
⑦	Connection of «BV...» to terminal 20, refer to «Connection examples»
⑧	When using burners without air damper, or with an air damper not controlled and monitored by the LAL…, terminal 8 must be connected to terminal 6
⑨	Wire link «B» clearly marked on the underside of the LAL… When wire link «B» is fitted, the LAL... initiates lockout if loss of flame occurs during operation. For repetition of the startup sequence, wire link «B» on the plug-in section of the LAL... must be cut away. Just cutting is not permitted!
⑩	For the permissible lengths and laying of detector cables, refer to «Flame supervision»

Mounting notes

- Ensure that the relevant safety regulations are complied with

Installation notes

- Installation work must be carried out by qualified staff
- Live and neutral conductors may not be mixed up

Electrical connection of the flame detector

It is important to achieve practically disturbance-free signal transmission:

- Never run the detector cable together with other cables
  – Line capacitance reduces the magnitude of the flame signal
  – Use a separate low-capacitance cable
- Observe the permissible cable lengths (refer to «Technical data»)
- Always run high-voltage ignition cables separately, with the greatest possible distance to the unit and to other cables

Commissioning notes

- Commissioning work must be carried out by qualified staff

- When commissioning the plant or when doing maintenance work, make the following safety checks:

	Safety check	Anticipated response
a)	Burner startup with flame detector darkened	Lockout at the end of «TSA»
b)	Burner startup with flame detector exposed to extraneous light	Lockout after 40 seconds at the latest
c)	With wire strap «B»: Simulation of loss of flame during operation. For that purpose, darken the flame detector during operation and maintain this state	Lockout
d)	Without wire strap «B»: Simulation of loss of flame during operation. For that purpose, darken the flame detector during operation and maintain this state	Repetition followed by lockout at the end of «TSA»

Standards

Conformity to EEC directives

- Electromagnetic compatibility EMC (immunity)	89 / 336 EEC
- Low-voltage directive	73 / 23 EEC

Service notes

- Maintenance work must be carried out by qualified staff
- Each time a unit has been replaced, check to ensure that wiring is in an orderly state and that the wires are firmly connected

Disposal notes

The unit contains electrical and electronic components and may not be disposed of together with household waste.
Local and currently valid legislation must be observed.

Mechanical design

LAL...
- Plug-in design
- Exchangeable unit fuse (including spare fuse)

LAL3.25

Difference to LAL1... / LAL2... / LAL4...:
- Extraneous light does not initiate lockout
  – during burner off times
  – during the prepurge time
- Extraneous light prevents burner startup

Housing
- Made of impact-proof and heat-resistance black plastic
- Lockout reset button with viewing window; located behind it:
  – Lockout warning lamp
  – Lockout indicator
    - coupled to the spindle of the sequence switch
    - visible in the transparent lockout reset button
    - uses easy-to-remember symbols to indicate the type of fault and the point in time lockout occurred

Plug-in base
- Base and plug-in section of the LAL... are designed such that only burner controls of the LAL... family can be plugged in
- 24 connection terminals
- Auxiliary terminals «31» and «32»
- 3 earth terminals terminating in a lug for earthing the burner
- 3 neutral conductor terminals
  – prewired to terminal 2
- 14 knockout holes for cable entry by means of cable glands
  – 8 at the side
  – 6 in the bottom of the base
- 6 lateral threaded knockout holes for cable entry glands Pg11 or M20

Type summary

Switching times are given in the order of the startup sequence, valid for 50 Hz mains frequency. At 60 Hz frequency, switching times are about 17 % shorter.

	Flash steam generators	**Universal use**	**Medium- or heavy-oil burners**
Flame supervision with QRB1... or QRC1... for blue-flame burners		LAL1.25 LAL4.25A27	
Flame supervision with QRB1... or RAR... Choice of air pressure supervision Choice of semiautomatic startup	LAL2.14	LAL2.25	LAL2.65
Same as LAL2.25 with the following exception: No lockout, but prevention of startup in the case of extraneous light		Special applications such as incinerator plants LAL3.25	
t1	10 s	22.5 s	67.5 s
TSA	4 s	5 s	5 s
t3	2 s	2.5 s	2.5 s
t3´	From the start [1])		
t3n	10 s	15 s	15 s
t4	8 s	7.5 s	7.5 s
t5	4 s	7.5 s	7.5 s
t6	10 s	15 s	15 s
t7	2 s	2.5 s	2.5 s
t8	30 s	47.5 s	92.5 s
t10	6 s	10 s	10 s
t11	Optional		
t12	Optional		
t13	10 s	15 s	15 s
t16	4 s	5 s	5 s
t20	32 s	35 s	12.5 s

[1]) With air pressure supervision: From the time the air pressure signal is received

Ordering

When ordering, please give full type reference according to «Type summary».

Accessories

Plug-in base

- With Pg11 threads for cable entry glands	**AGM410490500**
- With M16 threads for cable entry glands	**AGM13.1**

Technical data

General unit data LAL...	Mains voltage	AC 230 V –15 / +10 %
	- With LAL1... / LAL2... / LAL3... incl.	AC 100 V –15 %...AC 110 V +10 %
	Mains frequency	50...60 Hz ±6 %
	Unit fuse (built-in)	T6,3H250V to DIN EN 60 127
	Primary fuse (external)	max. 10 A (slow)
	Weight	
	- LAL...	approx. 1,000 g
	- Plug-in base	approx. 165 g
	Flame detectors:	
	- QRB1...	refer to Data Sheet 7714
	- QRC1...	refer to Data Sheet 7716
	- RAR...	refer to Data Sheet 7713
	Power consumption	approx. AC 3.5 VA
	Mounting position	optional
	Degree of protection	IP 40, when fitted, with the exception of the connection area (terminal base)
	Safety class	II
	Perm. input current at terminal 1	max. 5 A (peaks of 20 A / 20 ms)
	Perm. current rating of control terminals 3, 6, 7, 9...11 and 15...20	max. 4 A (peaks of 20 A / 20 ms)
	Required switching capacity of switching devices	
	- Between terminals 4 and 5	1 A, AC 250 V
	- Between terminals 4 and 12	1 A, AC 250 V
	- Between terminals 12 and «LP»	1 A, AC 250 V
	- Between terminals 4 and 14	5 A (peaks of 20 A)
	- «LP»	5 A
Plug-in base AGM...	Degree of protection	IP 00
	Cable connection	screw terminal cross-sectional area of wire: 0.5...1.5 mm²
	With stranded wires	use adequate ferrules
Environmental conditions	**Transport**	DIN EN 60 721-3-2
	Climatic conditions	class 2K2
	Mechanical conditions	class 2M2
	Temperature range	-50...+60 °C
	Humidity	< 95 % r.h.
	Operation	DIN EN 60 721-3-3
	Climatic conditions	class 3K5
	Mechanical conditions	class 3M2
	Temperature range	-20...+60 °C
	Humidity	< 95 % r.h.

⚠ **Condensation, formation of ice and ingress of water are not permitted!**

Flame supervision

	LAL1... with		**LAL2... / LAL3...** with		**LAL4... with**	
	QRB1...	QRC1...	QRB1...	RAR...	QRB1...	QRC1...
Min. detector current required at AC 230 V	95 µA	80 µA	8 µA	6,5 µA	95 µA	80 µA
Max. permissible detector current with no flame	12 µA	12 µA	0.8 µA	0.7 µA	12 µA	12 µA
Max. detector current that can occur	160 µA	130 µA	35 µA	30 µA	160 µA	130 µA
Instrument's +pole	To terminal 23	To terminal 23	To terminal 22	To terminal 22	To terminal 23	To terminal 23
Length of detector cable						
In the same cable as the control lines	Max. 30 m	---	Not permitted	---	Max. 30 m	---
Separate cable in cable duct	Max. 1000 m	---	20 m	RAR7...: 30 m	Max. 1000 m	---
3-core cable	---	Max. 1 m	---	---	---	Max. 1 m
2-core cable for the detector line (bl, sw); separate single-core cable for the live conductor (br)	---	Max. 20 m	---	---	---	Max. 20 m
Shielded cable (e.g. RG62, shield insulated)	---	---	200 m	RAR8...: 100 m	---	---
Shield	---	---	To terminal 23	---	---	---

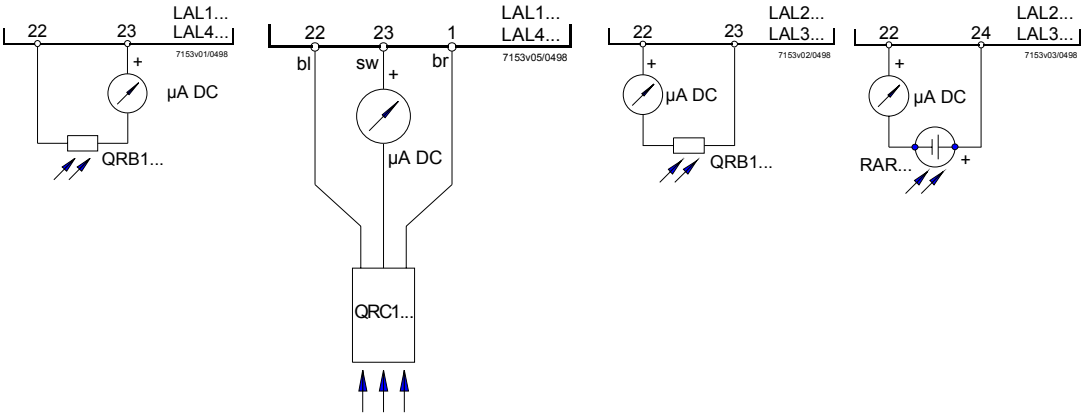

Function

2-stage expanding flame burner

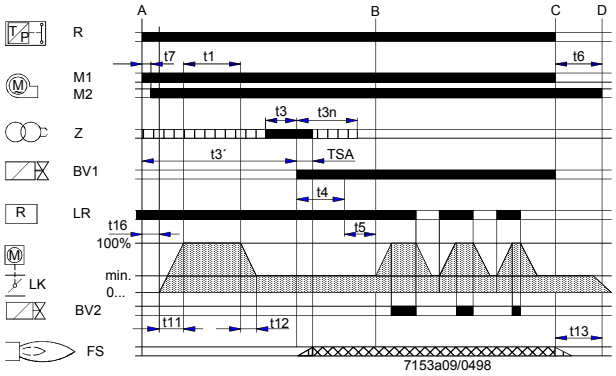

Modulating expanding flame burner

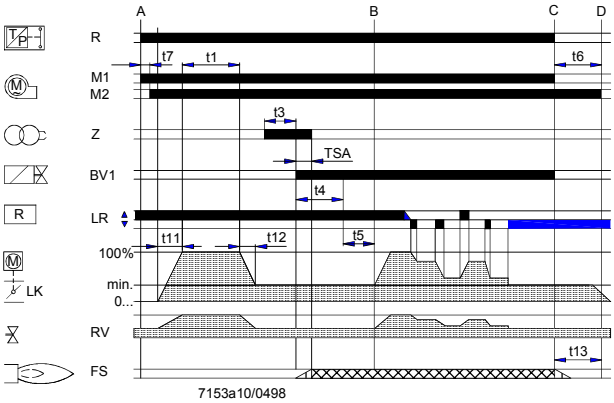

Legend

BV...	Fuel valve	M...	Fan or burner motor
FS	Flame signal amplifier	R	Control thermostat or pressurestat
LK	Air damper	RV	Modulating fuel valve
LR	Load controller	Z	Ignition transformer

General

The following features of the LAL... afford a high level of safety:

- Detector and flame simulation test are restarted on completion of the afterburn time «t13». Open or not fully closed fuel valves immediately initiate lockout at the end of «t13». The test ends on completion of the prepurge time «t1» of the next startup sequence
- The correct functioning of the flame supervision circuit is automatically checked during each burner startup sequence
- The control contacts for the release of fuel are checked to ensure they have not welded «t6»
- A built-in unit fuse protects the control contacts against overloads

Control of the burner

- Burner operation with or without postpurge
- Fan motors with a current draw of up to 4 A can be connected directly → starting current max. 20 A (for max. 20 ms)
- Separate control outputs for
  – preignition from start command
  – postignition until shortly before the burner startup sequence is completed
  – short preignition with postignition up to the end of «TSA»
- Separate control outputs for the actuator's positioning directions OPEN, CLOSE and MIN
- Checked air damper operation to ensure prepurging with the nominal air volume
- Checked positions:
  - CLOSED or MIN on startup → low-fire position
  - OPEN at the beginning of prepurging
  - MIN on completion of prepurging
  If the actuator does not drive the air damper to the required position, the burner startup sequence will be stopped
- 2 control outputs for the release of the second and third output stage or for load control
- When load control is enabled, the control outputs for the actuator will be galvanically separated from the burner control's control section
- Connection facilities for
  – remote lockout warning device
  – remote reset
  – remote emergency shutdown
- In addition, with LAL2... / LAL3... / LAL4...:
  – possibility of air pressure supervision with functional test of the air pressure monitor on startup
  – possibility of semiautomatic burner startup

Flame supervision

- Flame detector and flame simulation test are made automatically during burner off times and the prepurge time «t1»
- If loss of flame occurs during operation, the burner control will initiate lockout
- If automatic repetition of the startup sequence is required, the clearly marked wire link on the plug-in section of the LAL... must be cut away → start repetition

Preconditions for burner startup

- Burner control is not in the lockout position
- Sequence switch is in its start position
  → with LAL1..., voltage is present at terminals 4 and 11
  → with LAL2... / LAL3... / LAL4..., voltage is present at terminals 11 and 12
- Air damper is closed
- End switch «z» for the CLOSED position must feed power from terminal 11 to terminal 8
- Contact of the limit thermostat or pressure switch «W» and the contacts of any other switching devices in the control loop between terminals 4 and 5 must be closed → e.g. a control contact for the oil preheater's temperature

With the exception of LAL1...

- Normally closed contact of the air pressure switch must be closed → «LP» test

Startup sequence

A Start command by «R»:
→ «R» closes the start control loop between terminals 4 and 5
- The sequence switch starts to run
  - Only prepurging, fan motor at terminal 6 receives power
  - Pre- and postpurging, fan motor or flue gas fan at terminal 7 receives power on completion of «t7»
- On completion of «t16», the control command for opening the air damper is delivered via terminal 9
- Terminal 8 receives no power during the positioning time
- The sequence switch continues to run only after the air damper has fully closed

t1 Prepurge time with air damper fully open:
- The correct functioning of the flame supervision circuit is checked during «t1»
- The burner control will initiate lockout if correct functioning is not ensured

With **LAL2... / LAL3... / LAL4...**:
Shortly after the beginning of «t1», the air pressure switch must change over from terminal 13 to terminal 14
→ otherwise, the burner control will initiate lockout
→ start of the air pressure check

t3 Short preignition time:
«Z» must be connected to terminal 16, release of fuel via terminal 18

t3´ Long preignition time:
«Z» connected to terminal 15.

With **LAL1...**:
«Z» is switched on when start command is given.

With **LAL2... / LAL3... / LAL4...**:
«Z» is switched on when «LP» changes over
→ no later than at the end of «t10»

- On completion of «t1», the LAL... drives the air damper to the low-fire position via terminal 10
  → the low-fire position is defined by the changeover point of auxiliary switch «m» in the actuator
- During the positioning time, the sequence switch maintains its position
  → until terminal 8 receives power via «m»
- The motor of the sequence switch is switched to the control section of the LAL...
  → positioning signals delivered to terminals 8 now have no impact on the further startup sequence and on subsequent burner operation

TSA Ignition safety time:
On completion of «TSA», a flame signal must be present at terminal 22. It must be available until controlled shutdown occurs
→ otherwise, the burner control will initiate lockout and lock itself in the lockout position

t3n Postignition time:
- «Z» must be connected to terminal 15
- With short preignition, «Z» remains on until «TSA» has elapsed
  → connection to terminal 16

t4 Interval «BV1 – BV2» or «BV1 - LR»:
- On completion of «t4», voltage is present at terminal 19
- The voltage is required to power «BV2» connected to auxiliary switch «v» in the actuator

t5 Interval:
- On completion of «t5», terminal 20 receives power. At the same time, control outputs 9 to 11 and input 8 are galvanically separated from the LAL...'s control section
  → LAL... is now protected against reverse voltages from the load control circuit
- With the release of «LR» at terminal 20, the startup sequence of the LAL... ends
- After a few idle steps (steps with no contact position changes), the sequence switch switches itself off

B Operating position of the burner

B-C Burner operation:
- During burner operation, «LR» drives the air damper to the nominal load or low-fire position, depending on heat demand
- Release of the nominal load takes place via auxiliary switch «v» in the actuator
- In the event of loss of flame during operation, the LAL... will initiate lockout
- For automatic start repetition, the clearly marked wire link «B» on the plug-in section of the LAL... must be cut away

C Controlled shutdown:
In the case of controlled shutdown, «BV...» will immediately be closed. At the same time, the sequence switch is started to program «t6»

C-D Sequence switch travels to start position «A»

t6 Postpurge time:
- Fan «M2» connected to terminal 7
- Shortly after the start of «t6», terminal 10 receives power
  → air damper is driven to the MIN position
- Full closing of the air damper starts only shortly before «t6» has elapsed
  → initiated by the control signal at terminal 11
- During the following burner off time, terminal 11 is live

t13 Permissible afterburn time:
During «t13», the flame signal input may still receive a flame signal
→ no lockout

D-A End of control program:
→ start position
As soon as the sequence switch has reached the start position – having thereby switched itself off – the flame detector and flame simulation test will start again

During burner off times, the flame supervision circuit is live.

When the start position is reached:
With **LAL1...**, a voltage signals is fed to terminal 4
With **LAL2... / LAL3... / LAL4...**, a voltage signal is fed to terminal 12

Control sequence under fault conditions and lockout indication

Whenever a fault occurs, the sequence switch stops and with it the lockout indicator.

The symbol appearing above the reading mark indicates the type of fault:

◀	No start	• One of the contacts is not closed (also refer to «Preconditions for burner startup») • Extraneous light: Lockout during or after completion of the control program Examples: – Nonextinguished flame – Leaking fuel valves – Faulty flame supervision circuit
▲	Interruption of startup sequence	• No OPEN signal at terminal 8 from the changeover end switch «a» • Terminals 6, 7 and 15 are live until fault has been corrected
P	Lockout	Does not apply to LAL1...: • No air pressure indication at the beginning of the air pressure check • Air pressure failure after the air pressure check
■	Lockout	• Defect in the flame supervision circuit
▼	Interruption of startup sequence	• No positioning signal at terminal 8 from the auxiliary switch «m» for the low-fire position • Terminals 6, 7 and 15 are live until fault has been corrected
1	Lockout	• No flame signal at the end of the safety time
I	Lockout	• Flame signal has been lost during operation

Lockout indicator

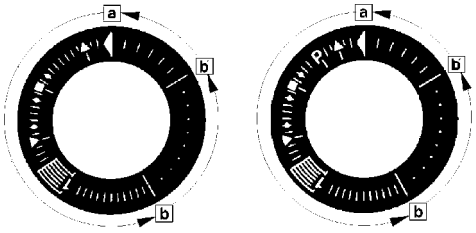

LAL1 LAL2..., LAL3..., LAL4...

a-b	Startup sequence
b-b´	Idle steps (with no contact confirmation)
b (b´)-a	Postpurge program

- Burner control can immediately be reset after lockout:
  – Do not press the lockout reset button for more than 10 seconds
- The sequence switch always travels to the start position first
  – After resetting
  – After rectification of a fault that led to shutdown
  – After each power failure
  During this period of time, power is only fed to terminals 7 and 9...11.
- Then, the LAL.... will program a new burner startup sequence

Connection diagrams (for variants, refer to «Connection examples»)

LAL1...

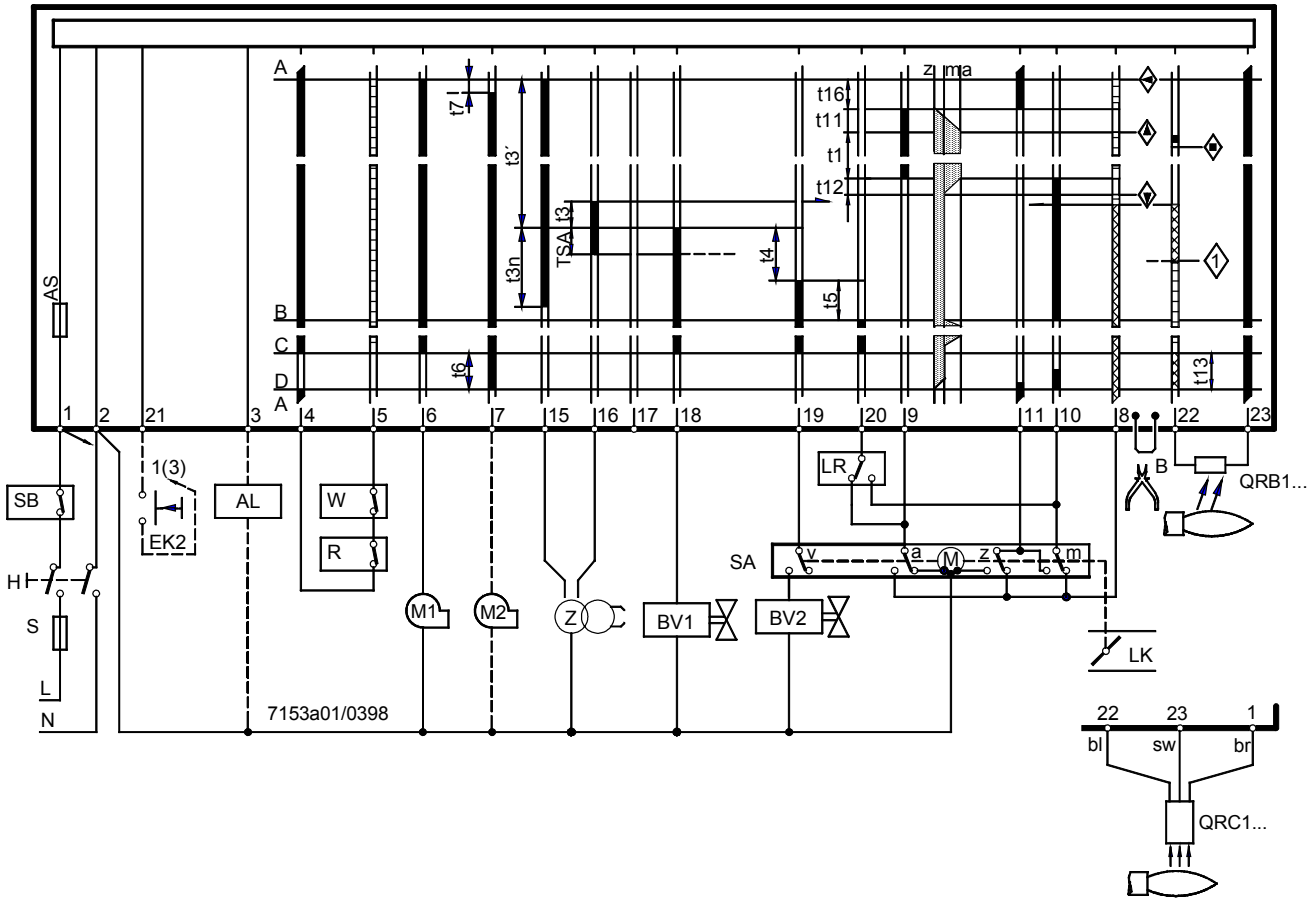

LAL2... / LAL3...

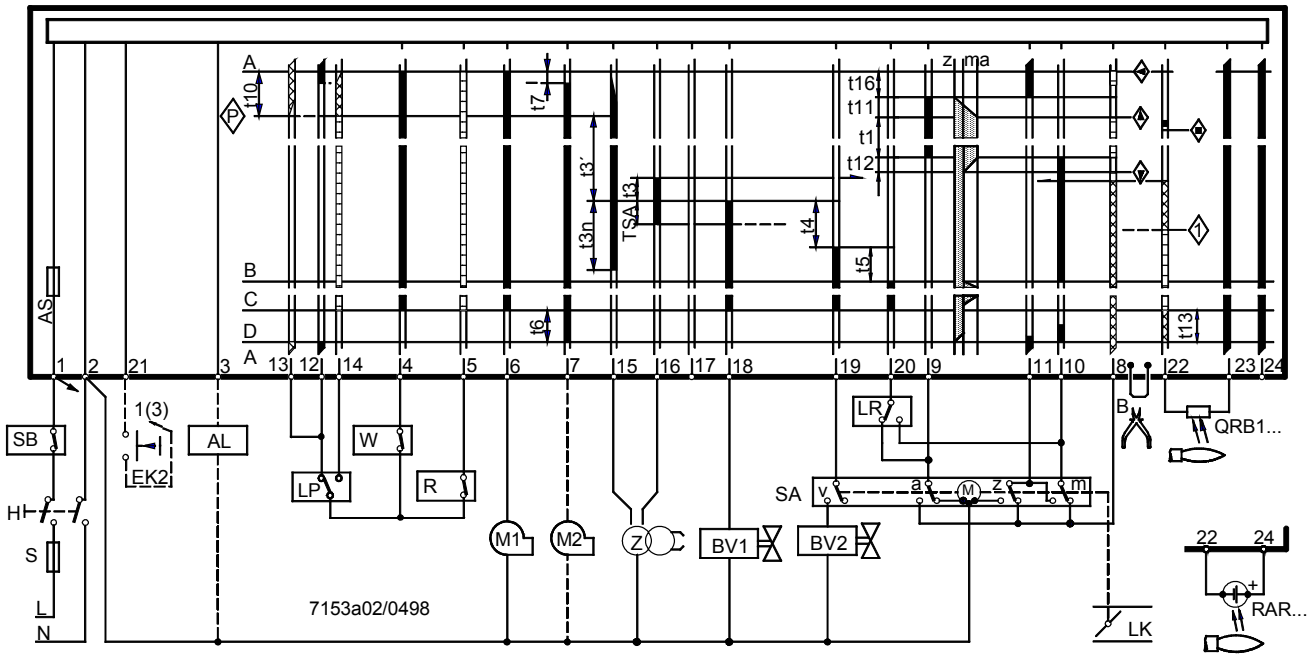

LAL4...

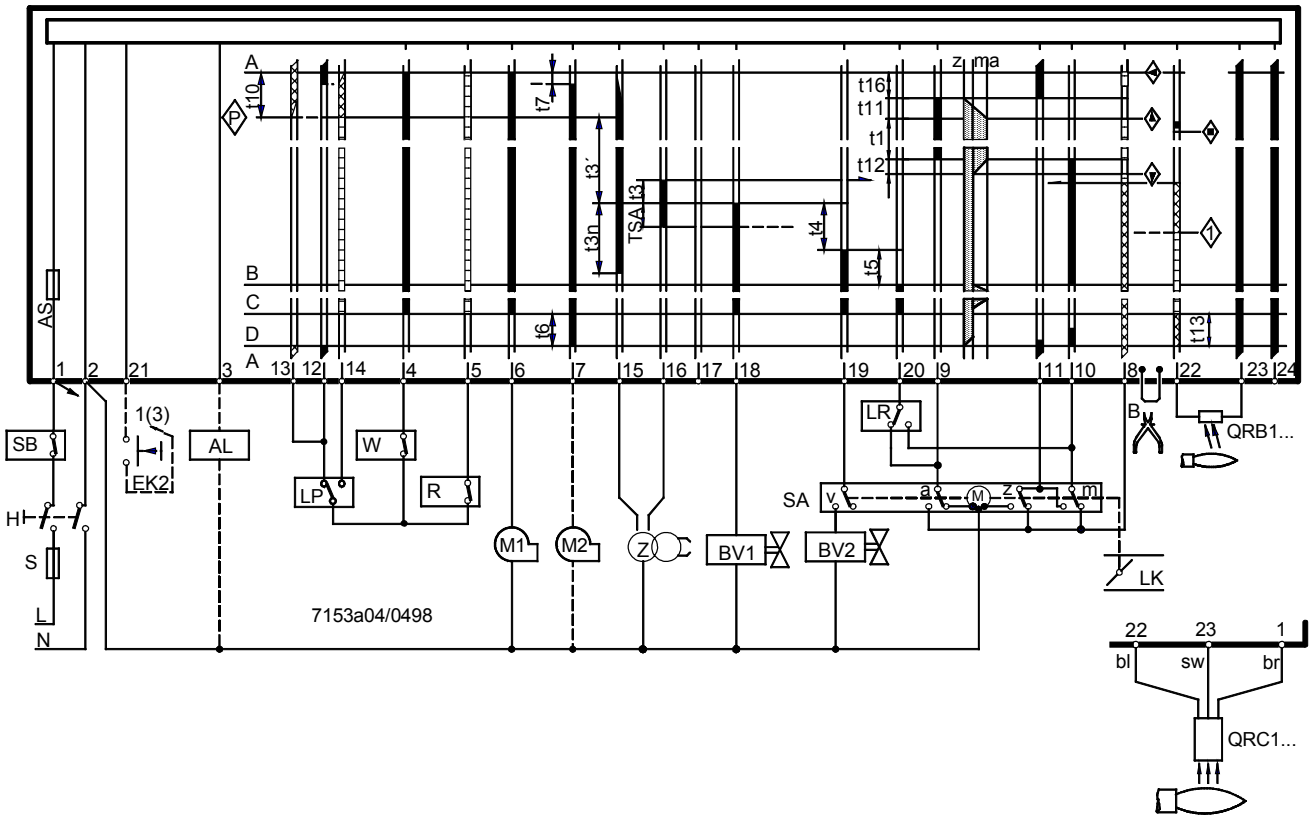
A
B
C
D
A
t10
t7
t3'
t3n
TSA
t3
t4
t5
t6
t16
t11
t1
t12
t13
z
ma
P
AS
1
2
21
3
13
12
14
4
5
6
7
15
16
17
18
19
20
9
11
10
8
22
23
24
SB
H
S
L
N
1(3)
EK2
AL
LP
W
R
M1
M2
Z
BV1
BV2
LR
SA
v
a
M
z
m
B
QRB1...
LK
7153a04/0498
22
23
1
bl
sw
br
QRC1...

Connection diagrams

LAL1...

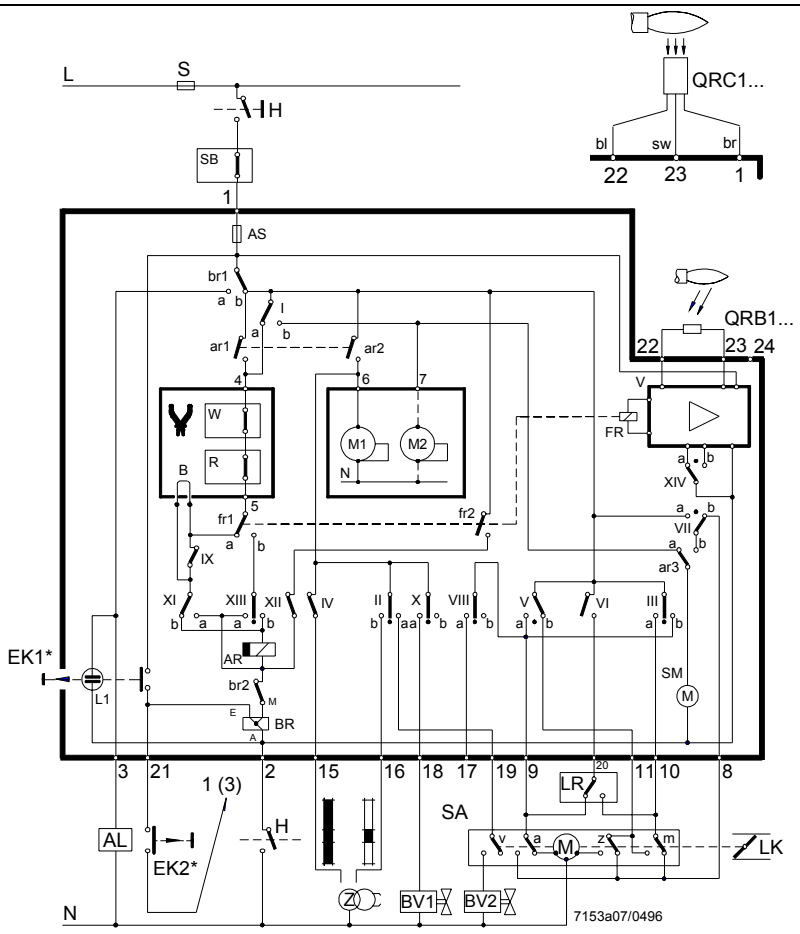

LAL2... / LAL3...

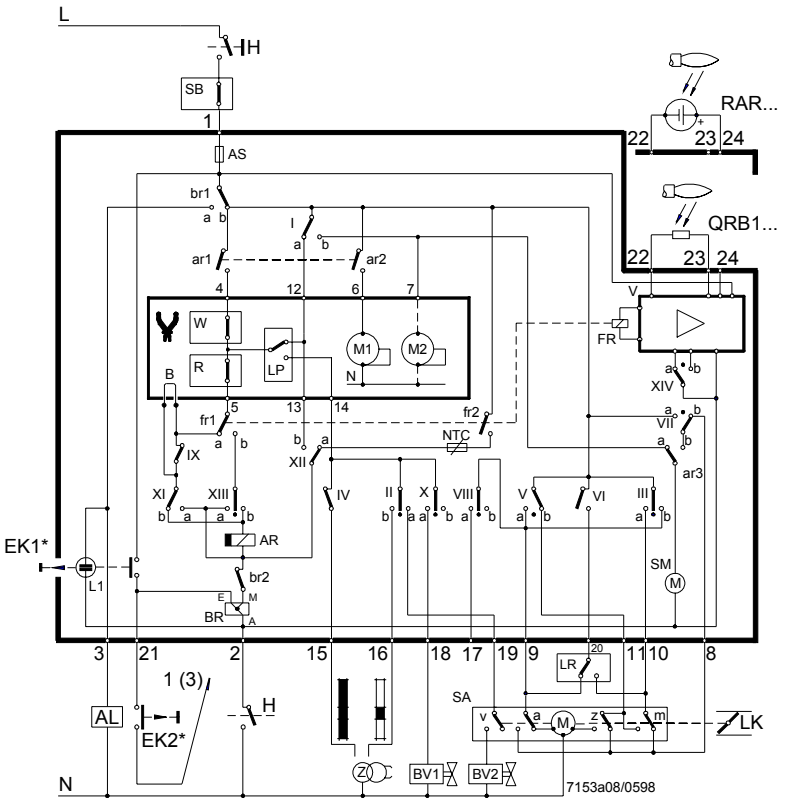

⚠ Do not press the lockout reset button for more than 10 seconds!
For the connection of the safety shutoff valve, refer to the plant diagram provided by the burner supplier.

Connection diagrams (cont'd)

LAL4...

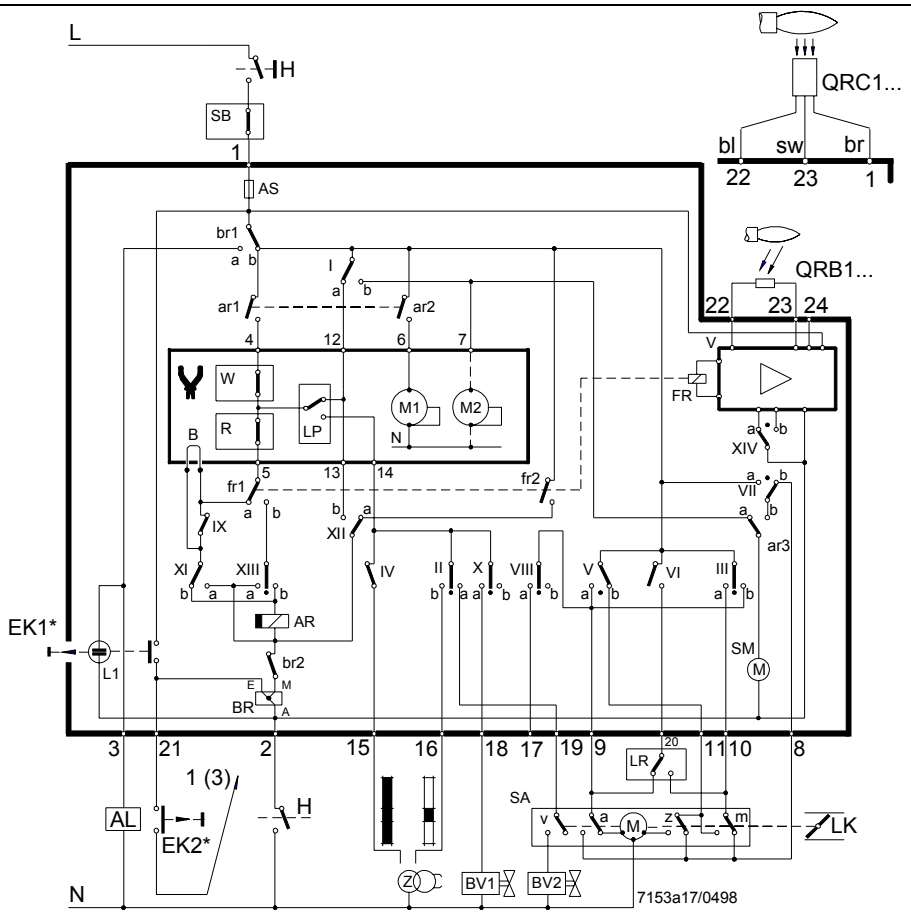

⚠ Do not press the lockout reset button for more than 10 seconds!
For the connection of the safety shutoff valve, refer to the plant diagram provided by the burner supplier.

Sequence diagram

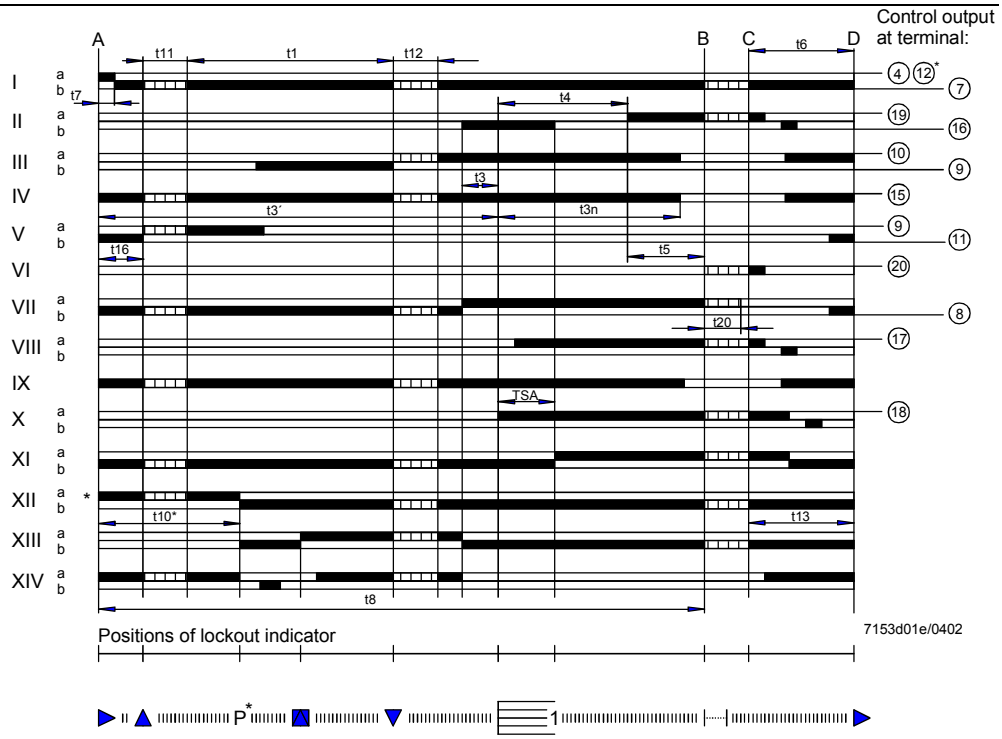

* These data do not apply to LAL1...

Legend

a	Changeover end switch for air damper's OPEN position
AL	Remote lockout indicator (alarm)
AR	Load relay with «ar...» contacts
AS	Unit fuse
B	Wire link
bl	Blue
br	Brown
BR	Lockout relay with «br...» contacts
EK...	Lockout reset button
FR	Flame relay with «fr...» contacts
H	Mains isolator
L...	Lockout warning lamp
LP	Air pressure switch
m	Auxiliary switch for air damper's MIN position
NTC	Resistor with negative temperature coefficient
QRC1...	Blue-flame detector
QRB1...	Photoresistive detector
RAR...	Selenium photocell detector
S	Fuse
SA	Air damper actuator
SM	Synchronous motor of sequence switch
sw	Black
v	In the actuator: Auxiliary changeover switch for position-dependent release of fuel
V	Flame signal amplifier
W	Limit thermostat or pressure switch
z	In the actuator: End switch for air damper's CLOSED position

Control signals delivered by the LAL...

Permissible input signals

Required input signals:

If these signals are not present during ◊ or ▨, the burner control will stop the startup sequence or initiate lockout

TSA	Ignition safety time
t1	Prepurge time with air damper fully open
t3	Preignition time, short («Z» connected to terminal 16)
t3´	Preignition time, long («Z» connected to terminal 15)
t3n	Postignition time («Z» connected to terminal 15)
t4	Interval between voltage at terminals 18 and 19 («BV1-BV2»)
t5	Interval between voltage at terminals 19 and 20 («BV2» load controller)
t6	Postpurge time (with «M2»)
t7	Interval between start command and voltage at terminal 7 (start delay time for «M2»)
t8	Duration of startup sequence (excluding «t11» and «t12»)
t10	Only with LAL2... / LAL3... / LAL4...: Interval from startup to the beginning of the air pressure check
t11	Air damper running time to the OPEN position
t12	Air damper running time to the low-fire position (MIN)
t13	Permissible afterburn time
t16	Interval to the OPEN command for the air damper
t20	Not with all LAL…: For self-shutdown of the sequence switch

Connection examples

Connection of actuators without changeover end switch for the CLOSED position

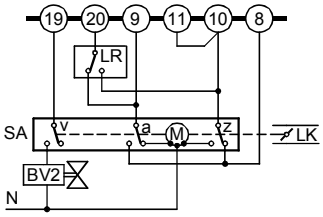

7153a11/0498

«z» adjusted for low-fire air volume

Control of actuator during operation by control signals fed to terminal 17

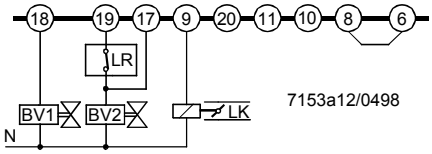

7153a12/0498

For signal path, refer to «Connection diagrams»

Control of «BV...» via terminal 20

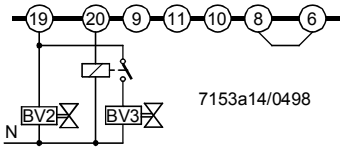

7153a14/0498

Relay is not required if «BV3» at terminal 20 is hydraulically series-connected with «BV2».
«BV2» is controlled by terminal 18 or 19.
→ Burner with no air damper or with air damper not controlled by the LAL…

Wiring required with LAL2... for operation with no air pressure supervision

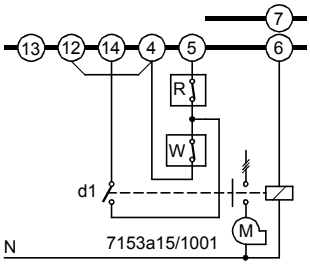

7153a15/1001

If an auxiliary contact «d1» of the fan contactor is included in the circuit as shown in the diagram, ignition and release of fuel take place only when the contact is closed.

Semiautomatic startup

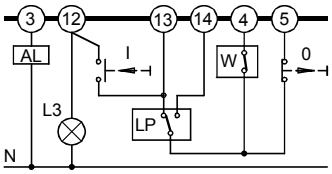

7153a16/0498

The burner is switched on manually by pressing the «I» button.
Then, the LAL... programs startup and flame supervision.
Burner shutdown is also made manually by pressing the «0» button, or automatically when limit thermostat or pressure switch «W» responds.
«L3» indicates when the burner is ready for startup. It extinguishes shortly after the burner is started up.
For other connections, refer to «Connection diagrams».

2-stage expanding flame burner

Load control with a 2-position controller.
During burner off times, the air damper is closed.

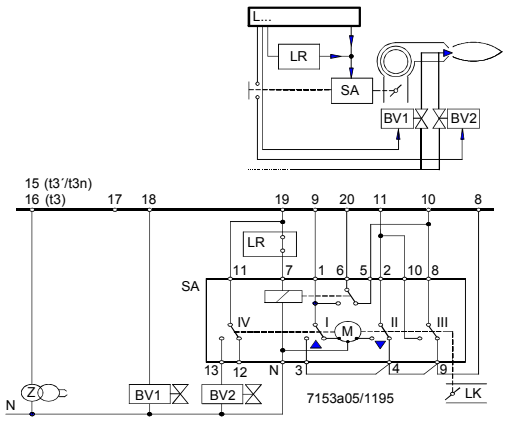

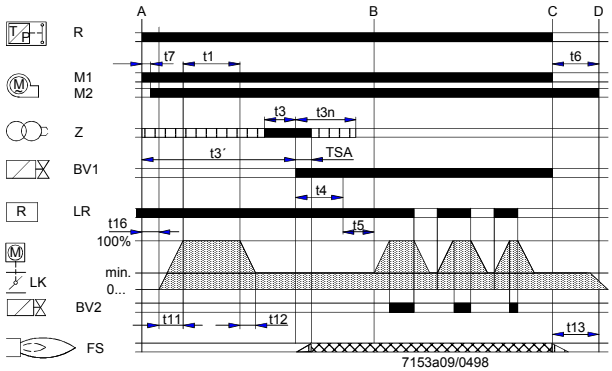

Control of actuator according to the single-wire control principle.
→ For actuator «SA» type SQN..., refer to Data Sheet 7808; for other connections, refer to «Connection diagrams»

Pre- and postignition when the ignition transformer is connected to terminal 15

Modulating expanding flame burner

Load control with modulating controller with galvanically separated control contacts for positioning directions OPEN and CLOSE.

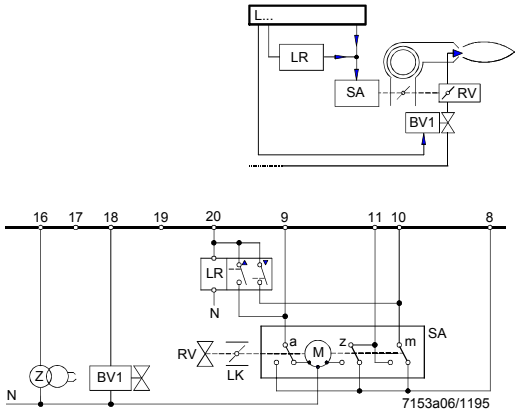

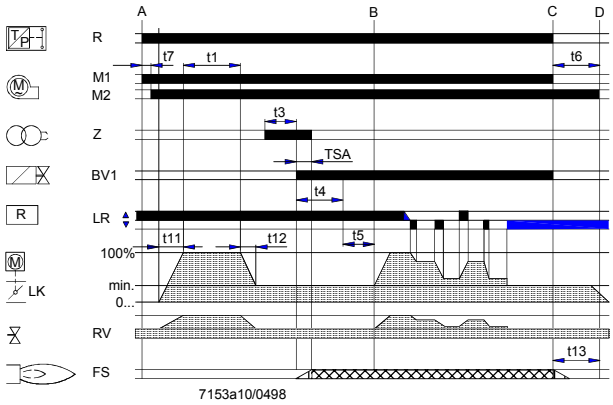

During burner off times, the air damper is fully closed.
When using actuators with changeover end switch «z» for the CLOSED position, terminals 10 and 11 must be interconnected.
For other connections, refer to «Connection diagrams».

Dimensions in mm

LAL... with plug-in base
AGM...

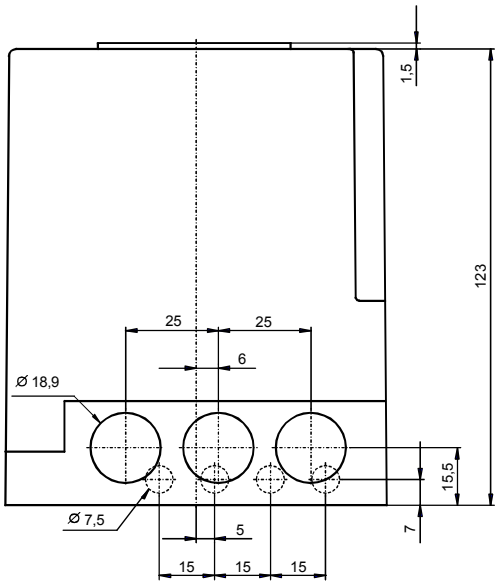

7153m02/0396

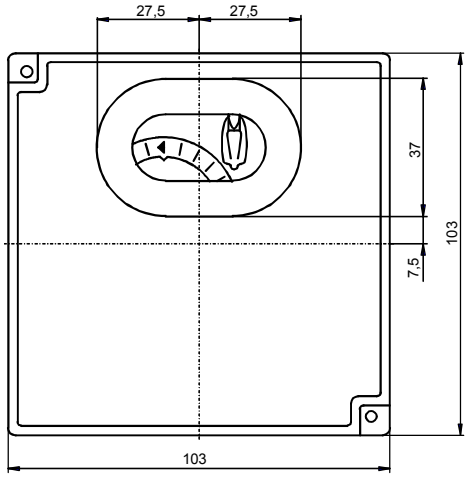

Plug-in base AGM...
(Pg11 or M16 threads)

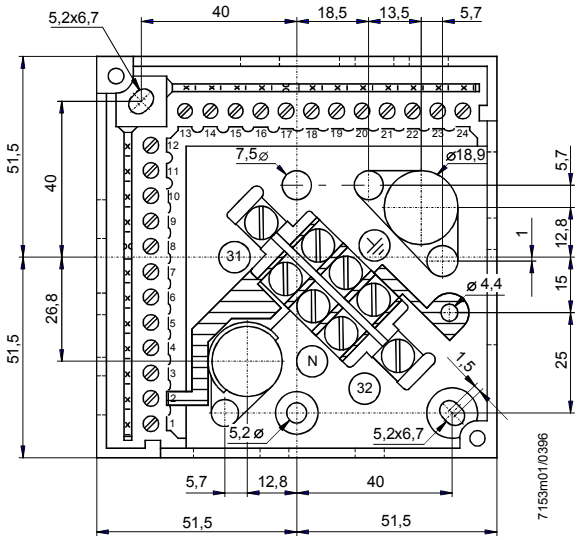

7153m01/0396

©2002 Siemens Building Technologies
Subject to change!