SIEMENS

LMV51... / LMV52…
Burner Control with integrated Fuel / Air Ratio and Load Control for Forced Draft Burners

LMV52...
with additional O2 Trim Control

Basic Documentation

The LMV5... and this Basic Documentation are intended for OEMs which integrate the systems in their products!

Based on the following software versions:

LMV51... :	V02.40
LMV51.200…:	V03.00
LMV52...:	V04.50
Int. LC:	V01.90
Int. VSD module:	V01.40
AZL52...:	V04.20 / 4.30
PLL52...:	V01.20

CC1P7550en
11.12.2008

Building Technologies
HVAC Products

Supplementary documentation

User Documentation AZL5… Modbus A7550

User Documentation Basic Diagram for Use of LMV5...
with 2 Types of Gases A7550.1

User Documentation Basic Diagram for Use of LMV5...
with 2 Types of liquid Fuels A7550.3

Operating Instructions ACS450 PC Software for LMV5... ..... J7550

Setting Lists I7550

Installation Guide LMV5… J7550.1

Data Sheet LMV5 ..... N7550

Product Range Overview LMV5… Q7550

Operating Instructions AZL5… (U7550.2) for the heating engineer level ... 74 319 0306 0

Operating Instructions AZL5… (U7550.3) for the user level 74 319 0307 0

Contents

1 Safety notes 17

1.1 Warnings 17

1.2 Mounting notes 18

1.3 Installation notes 20

1.4 Electrical connection of ionization probe and flame detector 21

1.5 Commissioning notes 21

1.6 Setting and parameter setting notes 22

1.7 Standards and certificates 23

1.8 Service notes 23

1.9 Life cycle 23

1.10 Disposal notes 24

2 General 25

2.1 Brief description 25

– Basic diagram 25

2.2 Block diagram inputs / outputs 27

– Block diagram (cont‘d) 29

3 Fuel train applications (examples) 30

– Gas direct ignition 30

– Gas pilot ignition 1 30

– Gas pilot ignition 2 30

– Fuel valve control sequence 30

– Fuel train applications (cont‘d) 31

– Direct ignition with light oil, multistage 31

– Direct ignition with light oil, modulating 32

– Fuel valve control sequence 32

– Direct ignition with heavy oil, multistage 33

– Direct ignition with heavy oil, modulating 33

– Fuel valve control sequence 34

– Dual-fuel burner gas / light oil with gas pilot ignition 35

– Fuel valve control sequence 35

– Dual-fuel burner gas / heavy oil with gas pilot ignition 36

– Fuel valve control sequence 36

4 Burner control 37

4.1 Description of inputs and outputs 37

– Flame signal input and flame detector X10–01 and X10–03 37

– Self-test function LMV5... / QRI... / QRA7... 37

– Separate flame supervision, only with LMV52... 38

– Application example 38

– Implementation 38

– Technical data, flame supervision 38

– QRI (suited for continuous operation) 38

– Connection diagram 38

– IONIZATION (suited for continuous operation) 39

– QRA2… / QRA4.U / QRA10… with AGQ1…A27 40

– Note 40
– QRA… 40
– LMV5…....40
– AGQ1…A27....40
– Connection diagram 40
– QRA7… (suited for continuous operation) 41
– Connection diagram 41
– QRB... (for intermittent operation only) 42
– Configuration extraneous light....42
– Indication of flame AZL5… 42
4.1.1 Digital inputs 43
– SAFETY LOOP X3–04 43
– FLANGE X3–03 43
– Lockout reset button X4-01 43
– Characteristics....43
– Characteristics....43
– Fuel selection with the fuel selector on the LMV5... X4-01 43
– Fan contactor contact (FCC) or flue gas recirculation pressure switch (FGR-PS) X4–01 44
– Inputs for external controller (ON/OFF) X5–03 44
– 2 inputs (ON / OFF or STAGE2 / STAGE3) 45
– X5–03....45
– Air pressure switch (APS) X3–02....45
– Pressure switch-valve proving-gas / leakage test or closed position indicator (CPI) X9–03....45
– Pressure switch-min-gas, start release gas (DWmin-gas) X9–03....46
– Start release gas / CPI X7–03 (only with LMV52...)....46
– Pressure switch-max-gas, (DWmax-gas) X9–03 47
– Pressure switch-min-oil (DWmin-oil) X5–01....47
– Pressure switch-max-Oil (DWmax-Oil) X5–02 47
– Start release-oil (START) X6–01 48
– Direct heavy oil start (HO-START) X6–01 48
4.1.2 Digital outputs 49
– Alarm output, type No-SI X3–01 49
– Output fan, type No-SI X3–01 49
– Output ignition, type SI (IGNITION) X4–02 49
– Outputs valves-oil, type SI (V...) X8–02, X8–03, X7-01, X7-02, X6-03 .49
– Outputs valves -gas, type SI (V..., main valve, shutoff valve, pilot valve) X9–01 49
– Operation indication gas, operation indication oil, type SI X8-01....50
– Output oil pump / magnetic clutch, type No-SI X6–02 50
– Output «Start signal» or «pressure switch-valve» (air pressure switch test valve) type No-SI (START) X4–03 50
4.2 Control sequence....51
4.2.1 Parameters 51
– Time parameters....51
4.2.2 Gas valve proving 52
– Recommendation 52
– Determination of valve proving leakage rate 53
4.2.3 Special functions during the control sequence 54
– Lockout phase (phase 00)....54
– Safety phase (phase 01) 54

– Repetition counter 54
– Signaling start preventions 55
– Safety shutdown in standby mode 55
– Forced intermittent operation 55
– Prepurging 55
– Prepurge time 55
– Prepurge time after safety shutdown 56
– Start without prepurging 56
– Program stop function 57
– Gas shortage program 57
– Sequence diagram 57
– Part load shutdown 58
– Normal / direct start 58
– Continuous fan operation 58
– Continuous pilot control (only LMV52...) 58
– Response to extraneous light in standby 58
4.2.4 Selection of fuel 59
– Selection of fuel on the AZL5... 59
– Selection of fuel via BACS (Modbus) 59
– Fuel changeover 59
4.2.5 Sequence diagrams 60
– Gas direct ignition 60
– Gas pilot ignition 1 61
– Gas pilot ignition 2 62
– Light oil direct ignition 63
– Heavy oil direct ignition 64
– Light oil with gas pilot ignition 65
– Heavy oil with gas pilot ignition 66
– Legend to the sequence diagrams 67
– Legend to the sequence diagrams (cont´d) 68

5 Fuel / air ratio control (FARC) 69

5.1 General 69
5.1.1 Control sequence 69
– Standby 69
– Preventilation 69
– Ignition 70
– Traveling to the operating position 70
– Operation 70
– End of operating position 70
– Postpurging 71
– Actuator speed outside normal operation 71
– Operating position 71
– Modulating 71
– Multistage operation 72
5.1.2 Position check 73
– Dynamic safety time fuel / air ratio control 73
– Outside the operating position 75
– Operating position modulating 75
– Operating position multistage 75
5.1.3 Special features 75
– Program stop 75

– Direction of rotation of actuators 75
– Limitation of the load range 76
– Hiding a load range 77
– Activation of actuators / VSD 77
– LMV51... 77
– LMV52... 77
– Number of fuel actuators 77
– Traveling times 77
– Shutdown behavior 78
– Overload protection of actuators 78
– Curve adjustment 78

6 Temperature or pressure controller (internal load controller LC).....79

6.1 General 79

6.2 Connection diagram 79

6.3 Operating modes with the load controller 80
– Operating mode 1 (ExtLC X5-03).....80
– Operating mode 2 (intLC).....81
– Operating mode 3 (int LC bus).....81
– Operating mode 4 (int LC X62) 82
– Operating mode 5 (Ext LC X62).....82
– Operating mode 6 (Ext LC bus) 83

6.3.1 Operating mode changeover to internal load controller 83

6.4 Control (characteristics) 84
– Operating mode 84

6.4.1 Integrated 2-position controller (C = ON / OFF).....84
– General 84
– Switching differentials 84

6.4.2 Modulating control.....85
– General 85
– Function diagrams.....85
– Control parameters 85
– Manual setting of the control parameters 85
– Self-setting of control parameters (adaption) 86
– Adaption sequence 87
– Checking the control parameters 88
– Example.....88
– Settling of the manipulated variable 89
– Principle 89
– Description (graph) 90

6.4.3 Multistage control.....91
– General 91
– Load-dependent activation of the higher burner stages.....91
– Function diagrams.....92

6.5 Actual values (X).....93
– Input 1, TEMP, Pt100 sensor (DIN) X60 93
– Input 2: TEMP. / PRESS INPUT, DC 0...10 V / DC 2...10 V / 4...20 mA / 0…20 mA X61 94
– Measuring range temperature (can be parameterized) 94
– Measuring range pressure (can be parameterized) 94
– Input 4: TEMP, Pt1000 / LG-Ni 1000 X60 94

6.6 Setpoints (W) ... 95
– Internal setpoint ... 95
– Input 3: SET POINT INPUT X62 ... 95
– External predefined setpoint ... 96
– External predefined load ... 96
– External predefined load, modulating ... 96
– External predefined load, multistage ... 96
– External setpoint changeover ... 97
– External setpoints or predefined load via digital ... 97
6.7 Integrated temperature limiter function ... 98
– temperature limiter ... 98
– Temperature limiter with external predefined load ... 98
– Requirements placed on sensor and protection pocket ... 99
6.8 Cold start thermal shock protection (CSTP) ... 100
6.8.1 Cold start thermal shock protection – modulating operation ... 100
6.8.2 Cold start thermal shock protection – multistage operation ... 101
6.8.3 Cold start thermal shock protection with temperature sensor in pressure plants 101
6.9 Output ... 102
6.9.1 Analog output 0 / 4...20 mA ... 102
– Restrictions: ... 102
– Output, modulating ... 102
– Output, multistage ... 102
– Output other values ... 102
– Upper scaling parameter: ... 102
– Lower scaling parameter: ... 102
6.10 Multiboiler plants ... 103
6.10.1 Multiboiler plants by means of an analog input ... 103
6.10.2 Multiboiler plants by means of a digital interface ... 103
7 Display and operating unit AZL5... ... 104
7.1 Assignment of AZL5… terminals ... 105
– Connecting cable to the PC ... 106
– Pin assignment cable connection Siemens AZL5… - Trebing & Himstedt SPI3 ... 106
7.2 Ports of the AZL5… ... 107
7.2.1 Port for the PC ... 108
7.2.2 Connection to superposed systems ... 109
– General information and BACS functions ... 109
– Writing parameters ... 109
7.3 Display and settings ... 110
7.3.1 Menu structure ... 110
– Displays ... 111
– Display (cont'd) ... 112
– Displays (cont'd) ... 113
– Lockout and error messages ... 114
– Lockout and error messages (cont'd) ... 115
– Standard parameterizations (incl. entry of password) ... 116
– Entry of password (PW) ... 117
– Start display ... 117
– First submenu level ... 118

– Second submenu level 118
– Third submenu level 118
– Fourth submenu level 119
– Addressing the actuators (function assignment) 120
– Direction of rotation 120
– Reset 120
– Operational status indication by LED on the actuator 120
– Power is fed to unaddressed actuator 120
– Button for addressing is pressed (display during addressing procedure) 121
– Addressing completed, normal operation of actuator 121
– Special function curve settings fuel / air ratio control 122
– Special function adaption load controller 132
– Burner identification (burner ID) 134
– Makeup of burner ID 135
– Languages 135
– Real time clock and calendar 135
– S / W changeover 135
– Backup 135
– Type of battery 135
– Adjustment of contrast (display) 135
– Shutdown function 135
– Quick access Normal operation 135
7.4 TÜV (German technical inspection association) test 136
– Loss-of-flame test 136
– Safety limit thermostat test 136
8 Commissioning instructions for the LMV5... system 137
8.1 Practice-oriented setting instructions for the system configuration, the burner control, and the electronic fuel / air ratio control system 137
8.1.1 Basic configuration 137
– 1. Parameterizing the burner identification (burner ID) 137
– 2. Selecting the fuel trains 137
– 3. Checking the inputs / outputs while taking into account the burner and plant conditions. *For details, refer to chapter Digital inputs.* 137
– 4. Setting gas valve proving 138
– 5. Addressing the actuators 138
– 6. Selecting the actuator's direction of rotation 139
– 7. Configuration of VSD (only LMV52.2...) (subsection 17.1.2) 139
– LMV52... activating and deactivating the actuators 139
– 8. Setting the load controller (option) 140
– 9. Selecting a temperature or pressure sensor 140
8.1.2 Settings for gas-fired operation 141
– 10. Activating program stops in different program phases 141
– 11. Checking and presetting the actuators positions for gas ignition 141
– 12. Manual startup 141
– 13. Actuator positions during the prepurge time 142
– *Note:* 142
– 14. Ignition positions 142
– 15. Setting the curve 143
– First setting 143
– Changing an existing curve 144
– Creating a new curvepoint 144

– 16. Load limits ... 144
– 17. Shutdown ... 144
8.1.3 Settings for multistage oil-fired operation ... 145
– 18. Fuel changeover for oil-fired operation ... 145
– 19. Changing the burner operating mode from modulating to multistage (only when firing on oil) ... 145
– 20. Activating the program stops in the different program phases ... 145
– 21. Checking and presetting the ignition positions for firing on oil ... 146
– 22. Manual startup ... 146
– 23. Actuator positions during the prepurge time ... 146
– *Note:* ... 146
– 24. Ignition positions ... 147
– 25. Setting the burner stages ... 148
– 26. Shutdown ... 149
8.1.4 Extra functions of the LMV5... ... 150
– 27. Valve proving (leakage test) ... 150
– Example 1 (calculation of test time) ... 151
– Example 2 (determination of detectable leakage rate) ... 151
8.1.5 Configuration of the load controller ... 152
– Selection of operating mode ... 152
8.1.6 Control parameters of the load controller ... 153
– 1. Selection of the standard parameter set ... 153
– 2. Individual setting of the PID parameters ... 153
– 3. Automatic adaption ... 153
– Temperature limiter function ... 154
– Boiler setpoints W1 and W2 ... 154
– 2-position controller (C = ON / OFF) ... 155
– Diagram ... 155
– Cold start thermal shock protection (CSTP) ... 156
– Description ... 156

9 Connection terminals / coding of connectors ... 158

9.1 Connection terminals LMV51.040x1 ... 158

9.2 Connection terminals LMV51.000x1 / LMV51.000x2 / LMV51.040X22 ... 159

9.3 Connection terminals LMV51.140x1 ... 160

9.4 Connection terminals LMV51.100x1 / LMV51.100x2 / LMV51.140x2 ... 161

9.5 Connection terminals LMV51.200x1 / LMV51.200x2 ... 162

9.6 Connection terminals L LMV51.300B1 / LMV51.300B2 / LMV52.200B1 / LMV52.200B2 / LMV52.240B2 ... 163

9.7 Connection terminals LMV51.340B1 / LMV52.240B1 ... 164

9.8 Coding of connectors ... 165
– AGG5.720 ... 166
– AGG5.721 ... 167

10 Description of connection terminals (AC 120 V) ... 168

11 Description of connection terminals (AC 230 V) ... 174

12 Mounting, electrical installation and service ... 180
– Installation ... 180
– Electrical connections and wiring ... 180
– Connection of LMV5... CAN bus ... 180

12.1 Power supply to the LMV5... system 181
– Notes on example 3a / 3b 184
– Determination of the maximum cable length 185
– Types of cable 186
12.2 Suppliers of other accessory items 187
– Mounting clip for mounting rail order no. 2309.000 187
– PC adapter part no. 230 437 187
13 Duties of the authorized inspector 188
– LMV51... systems 188
– In addition with LMV52... systems 188
– Correct parameterization of the system 188
– Fuel / air ratio control system 189
– Burner control section 189
– O2 trim control (only with LMV52... system) 190
– General 190
14 Technical data 191
14.1 LMV5... and AZL5... 191
– Basic unit LMV5... 191
14.2 Loads on terminals, cable lengths and cross-sectional areas 192
– Loads on terminals «inputs» 192
– Loads of terminals «Outputs» 193
14.3 Cross sectional areas 194
14.4 AZL5... display and operating unit 194
14.5 CAN-bus 195
14.6 Environmental conditions (of all LMV5... system components) 195
15 Dimensions 196
– LMV5... 196
– AZL5... 197
– AGG5.210… / AGG5.220… 198
16 Addendum 2: Connection diagram 199
17 Addendum 3: Variable speed drive (VSD) module 200
– General 200
– Basic diagram 200
– LMV51... Configuration of the basic unit (BU) 200
– LMV52... configuration of the basic unit (BU) 200
17.1 VSD module 201
– General 201
17.1.1 Inputs / outputs 201
– Connection diagram 201
– Release contact X73-1 / -2 201
– Alarm input X73-3 201
– Analog output to the VSD X73-4 202
– Quick shutdown in the event of great speed deviations during operation 202
– Speed feedback signal 202
– Speed input X70 202

– Safe separation between mains voltage and protective extra low-voltage 203
– Sensor disk 203
– Speed sensor 203
– Selection of fan motor 203
– Fuel meter 203
– Fuel meter input X71 / X72 203
17.1.2 Configuring the VSD 204
17.1.3 Configuration of speed acquisition 205
– Standardization 205
– *Note* 205
– Settling time 206
17.1.4 Configuration of current interface 206
17.1.5 Configuration of fuel meter 206
– Pulse value gas 206
– Pulse value oil 206
17.1.6 Fuel meter readings 207
17.1.7 Process data 208
– Note 208
17.2 Differences to LMV51.200..., LMV51.0x0… / LMV51.1x0… 209
– Special functions Curve settings for electronic fuel / air ratio control 209
17.3 EMC: LMV5... system – VSD 210
17.4 Connection terminals 211
17.5 Description of the connection terminals for the VSD module 212
18 Addendum 4: LMV52... with O2 trim control and O2 module 213
18.1 General 213
18.2 Functioning principle of O2 trim control 214
18.2.1 Air rate reduction 214
18.2.2 Definition of O2 setpoint 214
18.2.3 Lambda factor 215
18.3 Precontrol 216
18.3.1 Calculation of precontrol 216
18.4 O2 trim control 217
18.4.1 Operating modes of O2 controller / O2 monitor 217
18.4.2 Load limitation with O2 trim control 218
18.4.3 Startup 218
18.4.4 Heating up the O2 sensor after «PowerOn» 218
18.4.5 Initializing the O2 controller 219
18.4.6 Behavior in the event of load changes 220
18.4.7 Increasing the manipulated variable in the case of a load change (offset).. 221
18.4.8 Control interventions by the O2 controller 222
18.5 O2 monitor 223
18.5.1 Delayed O2 min. value 223
18.5.2 Switch-off criteria 223
18.6 Self-test 224
18.6.1 Sensor test 224
18.6.2 Checking the O2 content (20.9 %) 225
18.7 Auxiliary functions 226

18.7.1 Warning when flue gas temperature is too high....226
18.7.2 Combustion efficiency....226
18.8 O2 module....227
18.8.1 Inputs and outputs....227
18.8.2 CAN bus X84, X85....230
18.9 Configuration of O2 module....230
18.10 Configuration of the system....231
18.10.1 Actuators / VSDs....231
18.10.2 Parameterization of the type of fuel....231
18.10.3 Setting the user-defined type of fuel....232
– Preset fuel parameters....232
18.11 Commissioning the O2 trim control system....233
18.11.1 Setting ratio control....233
18.11.2 Setting the O2 monitor....233
18.11.3 Direct entry of O2 min. values....234
18.11.4 Measuring the O2 min. values by lowering the air rate....234
18.11.5 Setting O2 trim control....235
18.11.6 Checking and changing the controller parameters....236
18.12 Setting notes....237
18.12.1 Parameter settings....237
18.12.2 Setting O2 ratio control....237
18.12.3 Setting the O2 controller....239
18.12.4 Other notes....239
18.13 Technical Data....240
– **LMV52... basic unit**....240
– PLL52.......240
– Environmental conditions....240
18.14 Terminal ratings, cable lengths and cross-sectional areas....240
– LMV52... basic unit....240
– PLL52.......240
19 Addendum 5: LMV52… with flue gas recirculation....241
19.1 Function principle of flue gas recirculation....241
19.1.1 Setting the flue gas recirculation function....241
19.2 Setting the fuel / air ratio....242
20 Dimensions....243
– PLL52.......243
21 Revision history....244
– Notes on compatibility....244
21.1 Basic unit LMV51.......244
– Software changes....244
21.1.1 Program stop....244
21.1.2 Deactivating the alarm....244
21.1.3 Pressure switch-min in the oil program....244
21.1.4 Shutoff-valve oil, switch-off time....244
21.1.5 «DWminOil» in program «Heavy oil with gas pilot»....244

21.1.6 «DWminOil» is only valued during the safety time after a delay time has elapsed 244
21.1.7 Air pressure switch test valve, inverted control 245
21.1.8 External controller contact with «Manually on» 245
21.1.9 Prepurge time after safety shutdown 245
21.1.10 Changes to the supplied parameter set 245
21.1.11 Driving to the low-fire positions 245
21.2 Basic unit LMV52 245
21.3 Load controller card 245
– Software changes of load controller 245
21.3.1 Auxiliary sensor for cold start thermal shock protection 245
21.3.2 Straightforward changeover of operation to internal load controller 245
21.3.3 With software version V01.50 or higher, Pt100 sensors in operating mode 6 are permitted 246
New load controller function for manipulated variable input and load output 246
– Modulating burners 246
– Multistage burners 246
21.3.4 Plausibility check at inputs X61 and X62 246
21.4 Display and operating unit AZL5... 247
21.4.1 Software changes to the flash memory 247
21.4.2 New designations of load controller inputs 247
21.4.3 Fuel counter with reading in liters 247
21.4.4 Preventing the transfer of parameter copies from new basic units to the backup memory of the AZL5 247
21.4.5 Parameter changes 247
21.4.6 Name changes of load controller operating modes 247
21.4.7 New display text for actuator faults 248
21.4.8 Changes to the LMV5… release 249
– Basic unit 249
– Load controller card 250
– VSD module 250
– O2 trim control 250
– AZL52... 251
– General 251
– AZL52... 251

1 Safety notes

1.1 Warnings

To avoid injury to persons, damage to property or the environment, the following warning notes must be observed!

The LMV5... is a safety device! Do not open, interfere with or modify the unit. Siemens will not assume responsibility for any damage resulting from unauthorized interference!

The addendum to the LMV51.2... and LMV52... documentation contains additional warning notes which should also be observed when using these system versions. After commissioning and after each service visit, check the flue gas values across the entire load range.

Risk of explosion!
Incorrect configuration can lead to excessive fuel supply which might cause an explosion! Operators must be aware that incorrect settings made on the AZL5… display and operating unit and incorrect settings of the fuel and / or air actuator positions can lead to dangerous burner operating conditions.

The present Basic Documentation describes a wide choice of applications and functions and shall serve as a guideline. The correct functioning is to be checked and proven with the help of function tests on a test rig or on the plant itself!

- All activities (mounting, installation and service work, etc.) must be performed by qualified staff
- Degree of protection IP40 as per DIN EN 60 529 for burner controls must be ensured through adequate mounting by the burner or boiler manufacturer
- Before making any wiring changes in the connection area of the LMV5..., completely isolate the plant from mains supply (all-polar disconnection). Ensure that the plant cannot be inadvertently switched on again and that it is indeed dead. If not observed, there is a risk of electric shock hazard
- Protection against electrical shock hazard on the LMV5... and on all connected electrical components must be ensured through appropriate mounting
- Each time work has been carried out (mounting, installation and service work, etc.), check to ensure that wiring is in an orderly state, that the parameters have been correctly set and make the safety checks as described in «Commissioning notes»
- Fall or shock can adversely affect the safety functions. Such units must not be put into operation even if they do not exhibit any damage
- In programming mode, the position check of actuators and VSD (checking electronic fuel / air ratio control) is different from the check during automatic operation. Like in automatic operation, the actuators are still jointly driven to their required positions. If an actuator does not reach the required position, corrections are made until that position is reached. However, in contrast to automatic operation, there are no time limits to these corrective actions. The other actuators maintain their positions until all actuators have reached the positions currently required. This is essential for setting fuel /air ratio control. This means that during the time the fuel / air ratio curves are programmed, the person making the plant settings must continuously monitor the quality of the combustion process (e.g. by means of a flue gas analyzer). Also, if combustion levels are poor, or in the event of dangerous situations, the commissioning engineer must take appropriate action (e.g. switching off manually)

To ensure the safety and reliability of the LMV5... system, the following points must also be observed:
- Condensation and ingress of humidity must be avoided. Should such conditions occur, make sure that the unit will be completely dry before switching on again!
- Static charges must be avoided since they can damage the unit's electronic components when touched. **Recommendation:** Use ESD equipment

1.2 Mounting notes

- Ensure that the relevant national safety regulations are complied with
- In the geographical areas where DIN regulations apply, the requirements of VDE must be satisfied, especially the standards DIN / VDE 0100, 0550 and DIN / VDE 0722

Notes for mounting LMV5...

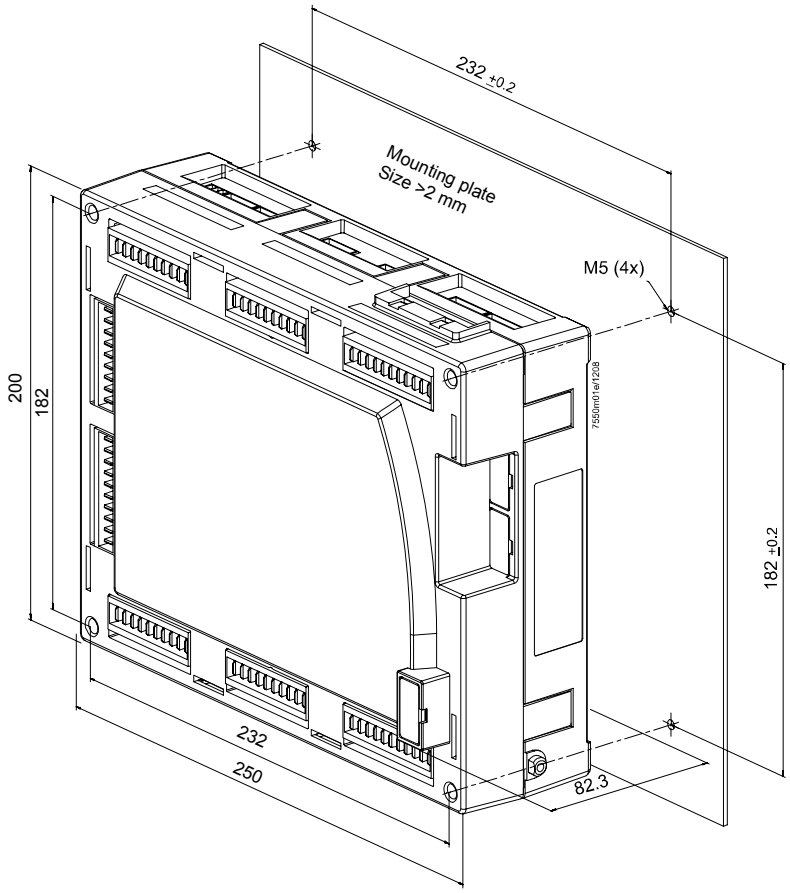

Notes for mounting AZL5...

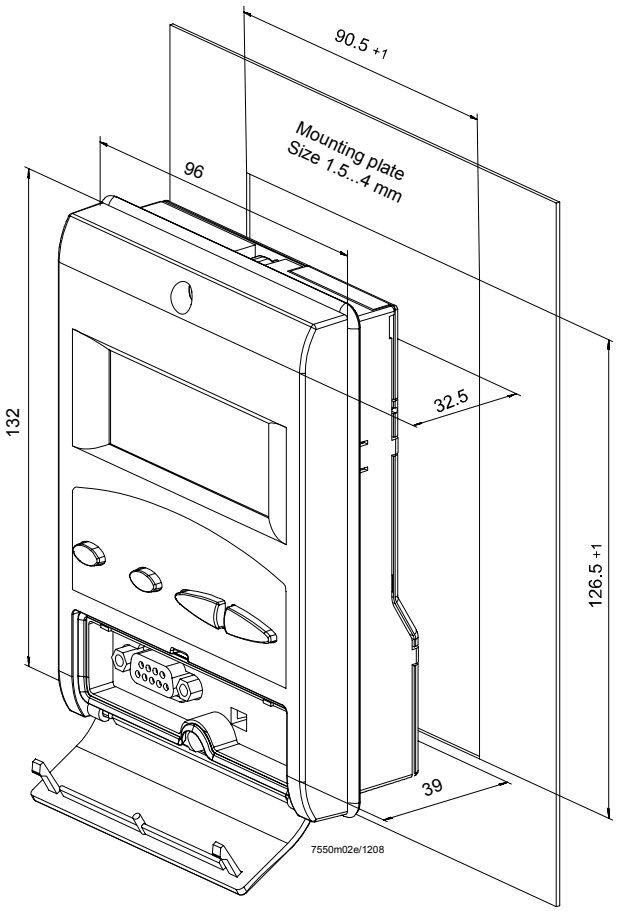

1.3 Installation notes

- Ensure that the electrical wiring inside the boiler is in compliance with national and local safety regulations
- **Do not mix up live and neutral conductors**
- Make certain that strain relief of the connected cables is in compliance with the relevant standards (e.g. as per DIN EN 60730 and DIN EN 60 335)
- Ensure that spliced wires cannot get into contact with neighboring terminals. Use adequate ferrules
- **Always run high-voltage ignition cables separately while observing the greatest possible distance to the unit and to other cables**
- The burner manufacturer must protect unused AC 230 V terminals with dummy plugs (*refer to sections Suppliers of other accessory items*)
- When wiring the unit, ensure that AC 230 V mains voltage cables are run strictly separate from extra low-voltage cables to warrant protection against electrical shock hazard

- This equipment has been tested and found to comply with the limits for a **Class A digital device**, pursuant to part 15 of the FCC Rules. These limits are designed to provide reasonable protection against harmful interference when the equipment is operated in a commercial environment. This equipment generates, uses, and can radiate radio frequency energy and, if not installed and used in accordance with the Instruction Manual, may cause harmful interference to radio communications. Operation of this equipment in a residential area is likely to cause harmful interference in which case the user will be required to correct the interference at his own expense
- This equipment has been tested and found to comply with the limits for a **Class B digital device**, pursuant to part 15 of the FCC Rules. These limits are designed to provide reasonable protection against harmful interference in a residential installation. This equipment generates, uses and can radiate radio frequency energy and, if not installed and used in accordance with the instructions, may cause harmful interference to radio communications. However, there is no guarantee that interference will not occur in a particular installation

If this equipment does cause harmful interference to radio or television reception, which can be determined by turning the equipment off and on, the user is encouraged to try to correct the interference by one or more of the following measures:

- Reorient or relocate the receiving antenna
- Increase the separation between equipment and receiver
- Connect the equipment into an outlet on a circuit different from that to which the receiver is connected
- Consult the dealer or an experienced radio / TV technician for help

1.4 Electrical connection of ionization probe and flame detector

It is important to achieve practically disturbance- and loss-free signal transmission:

- Never run the detector cables together with other cables
  – Line capacitance reduces the magnitude of the flame signal
  – Use a separate cable
- Observe the permissible cable lengths
- The ionization probe is not protected against electrical shock hazard. The mains-powered ionization probe must be protected against accidental contact
- **Locate the ignition electrode and the ionization probe such that the ignition spark cannot arc over to the ionization probe (risk of electrical overloads)**

1.5 Commissioning notes

- When commissioning the plant or when doing maintenance work, make the following safety checks:

	Safety check to be carried out	Expected response
a)	Burner startup with flame detector darkened	Lockout at the end of «TSA»
b)	Burner startup with flame detector exposed to extraneous light, e.g. to incandescent light with detectors for infrared or visible radiation (with QRI…, interrupted at about 20 Hz), quartz-halogen bulb or cigarette lighter flame with detectors for UV radiation (QRA7...)	Lockout at the end of the prepurge time Note: Only when supervision of extraneous light is activated!
c)	Simulation of loss of flame during operation. For that, darken the flame detector in the operating position and maintain that state	Lockout or restart, depending on the burner control's configuration
d)	Check the plant's response time with loss of flame during operation. For that purpose, manually disconnect the fuel valves from power and check the time from this moment the burner control requires to switch off power to the valve	Turning off power to the valves by the burner control within the period of time permitted for the respective type of plant

- There is no absolute protection against incorrect use of the RAST5 connectors. For this reason, prior to commissioning the plant, check the correct assignment of all connectors
- Electromagnetic emissions must be checked on an application-specific basis
- Make a loss-of-flame test using the AZL5… of the LMV5…

1.6 Setting and parameter setting notes

- When adjusting the electronic fuel / air ratio control system integrated in the LMV5…, allow for sufficient amounts of excess air since – over a period of time – the flue gas settings will be affected by a number of factors (e.g. density of air, wear of actuating devices, etc.). For this reason, the flue gas values initially set must be checked at regular intervals
- To provide protection against inadvertent or unauthorized parameter transmission between the parameter backup memory of the AZL5... display and operating unit and the LMV5... basic unit, the OEM (burner or boiler manufacturer) must enter an individual burner identification (ID) for every burner. Compliance with this regulation is mandatory to ensure that the LMV5… system will prevent parameter sets from other plant (with unsuited and possibly dangerous parameter values) to be transmitted to the LMV5… basic unit via the backup memory of the AZL5... (*also refer to the description of burner identification in chapter Display and operating unit AZL5...*)

- With the LMV5..., it is to be noted that the unit's characteristics are determined primarily by the specific parameter settings rather than by the type of unit. This means that, among other things, each time a plant is commissioned, the parameter settings must be checked and the LMV5... must not be transferred from one plant to another without adapting the parameter settings to the new plant
- In the case of dual-fuel burners and oil-firing, the short preignition (phase 38) parameter *OnTmeOilIgnition* is to be selected and a magnetic clutch is to be used, ensuring that there will be no oil pressure until this phase is reached. The magnetic clutch can be renounced at a pure oil burner, then the long preignition (from phase 22) must be parameterized
- When using the ACS450 PC software, the safety notes given in the relevant Operating Instructions (CC1J7550) must also be observed
- A password protects the parameter setting level against unauthorized access. The OEM allocates individual passwords to the setting levels he can access. The standard passwords used by Siemens must be changed by the OEM. These passwords are confidential and may only be passed on to persons authorized to access such setting levels
- The responsibility for setting the parameters lies with the person who – in accordance with his access rights – has made changes to the respective setting level

In particular, the OEM will assume responsibility for the correct parameter settings in compliance with the standards covering the specific applications (e.g. EN 676, EN 267, EN 1643, etc.).

1.7 Standards and certificates

Conformity to EEC directives

- Electromagnetic compatibility EMC (immunity)	2004/108/EC
- Directive for gas-fired appliances	90/396/EEC
- Low-voltage directive	2006/95/EC
- Directive for pressure devices	97/23/EEC
- Safety limit thermostats	to EN 14597

ISO 9001: 2000
Zert. 00739

ISO 14001: 2004
Zert. 38233

Type	DIN	DVGW	VDE	TÜV CERT	CSA	FM APPROVED	UL	Lloyd's Register		TÜV
LMV51.000C1	x	x	---	x	x	x	x	x	x	x
LMV51.000C2	x	x	x	x	---	---	---	x	x	x
LMV51.040C1	---	x	---	---	x	x	x	x	x	x
LMV51.040C2	---	x	x	---	---	---	---	x	x	x
LMV51.100C1	x	x	---	x	x	x	x	x	x	x
LMV51.100C2	x	x	x	x	---	---	---	x	x	x
LMV51.140C1	---	x	---	---	x	x	x	x	x	x
LMV51.140C2	---	x	x	---	---	---	---	x	x	x
LMV51.200A1	x	x	---	x	x	x	x	x	x	x
LMV51.200A2	x	x	---	x	---	---	---	x	x	x
LMV51.300B1	x	x	---	x	x	x	x	---	x	x
LMV51.300B2	x	x	---	x	---	---	---	---	x	x
LMV51.340B1	---	x	---	---	x	x	x	---	x	x
LMV52.200B1	x	x	---	x	x	x	x	---	x	x
LMV52.200B2	x	x	---	x	---	---	---	---	x	x
LMV52.240B1	---	x	---	---	x	x	x	---	x	x
LMV52.240B2	---	x	---	---	---	---	---	---	x	x

1.8 Service notes

- **If fuses are blown, the complete unit must be returned to Siemens**

1.9 Life cycle

Burner controls has a designed lifetime* of 250,000 burner startup cycles which, under normal operating conditions in heating mode, correspond to approx. 10 years of usage (starting from the production date given on the type field). This lifetime is based on the endurance tests specified in standard EN298 and the table containing the relevant test documentation as published by the European Association of Component Manufacturers (Afecor) (www.afecor.org).

The designed lifetime is based on use of the burner controls according to the manufacturer's Data Sheet and Basic Documentation. After reaching the designed lifetime in terms of the number of burner startup cycles, or the respective time of usage, the burner control is to be replaced by authorized personnel.

* The designed lifetime is not the warranty time specified in the Terms of Delivery

1.10 Disposal notes

The unit contains electrical and electronic components and must not be disposed of together with household waste. Legal and currently valid legislation must be observed.

2 General

2.1 Brief description

The LMV5... is a microprocessor-based burner management system with matching system components for the control and supervision of forced draft burners of medium to large capacity.

The following components are integrated in the basic unit of the LMV5...:

- Burner control with gas valve proving system
- Electronic fuel / air ratio control with a maximum of 4 (LMV51…) or 6 (LMV52…) actuators
- Optional PID temperature / pressure controller (load controller)
- Optional VSD module

The system components (AZL5... display and operating unit, actuators, O2 module, etc.) are interconnected via a bus system. Communication between the bus users takes place via a safety-related, system-bound data bus (for safety reasons, integration of the bus into external CAN bus systems is not possible). All safety-related digital outputs of the system are permanently monitored via a contact feedback network. For flame supervision in connection with the LMV5... and continuous operation, the infrared flame detector type QRI... / flame detector QRA7... or an ionization probe can be used, for intermittent operation, optical flame detectors type QRB... / QRA2… / QRA4.U / QRA10… with AGQ1… (AC 230 V).

Basic diagram

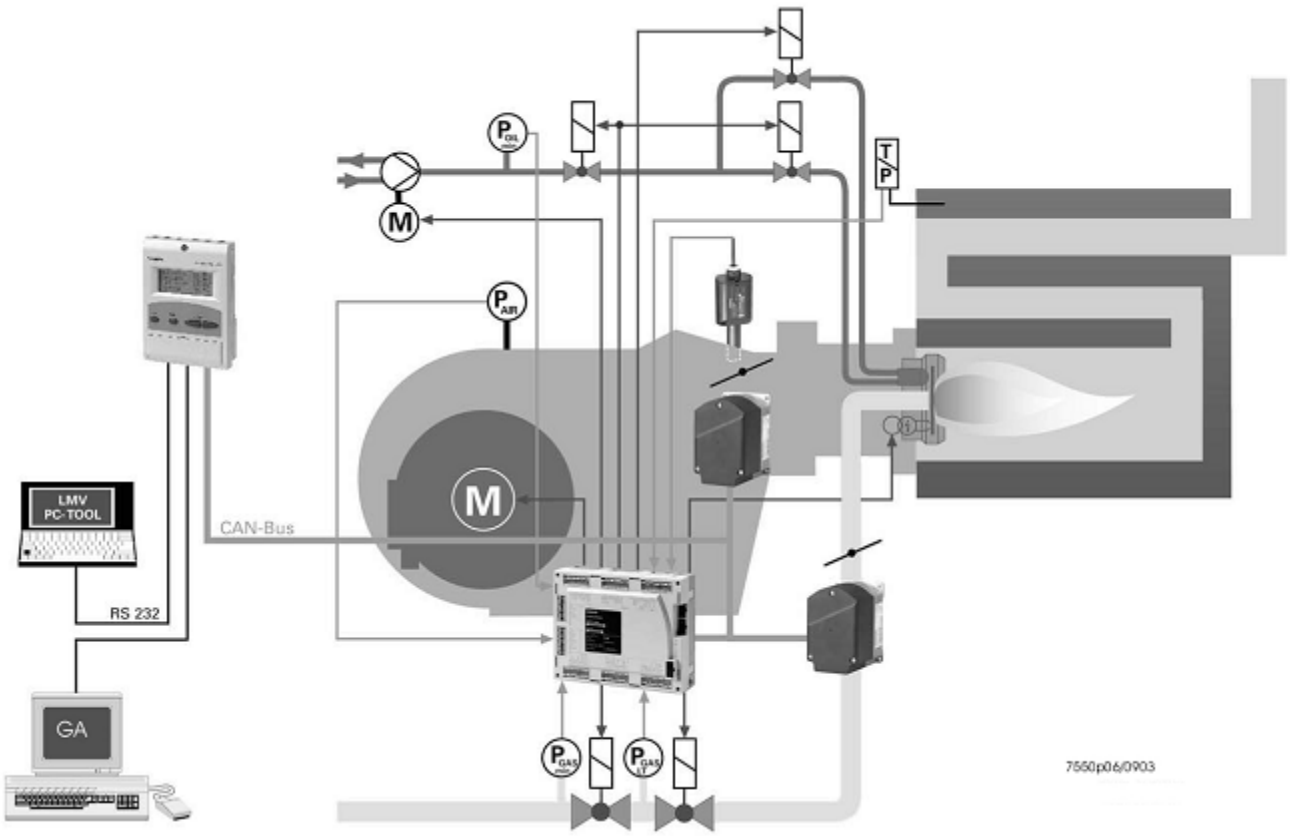

Example: Dual-fuel burner
- Gas: Modulating
- Oil: 2-stage

The burner management system is operated and programmed with the help of the AZL5… display and operating unit or a PC tool.
The AZL5… with LCD clear text and menu-driven operation affords straightforward operation and targeted diagnostics.
For making diagnostics, the LCD shows the operating states, the type of fault and the point in time the fault occurred.
The parameter setting levels for the burner / boiler manufacturer and heating engineer are password-protected to prevent unauthorized access.
Basic settings that the plant operator can make on site do not demand a password.
Also, the AZL5... is used as an interface for superposed systems such as a building automation and control system, or for a PC using the ACS450 software.
Among other features, the unit affords convenient readout of settings and operating states, parameterization of the LMV5..., and trend recording.
When replacing the LMV5... basic unit (BU), all parameters can be saved in a backup memory of the AZL5... to be loaded back into the basic unit.
This means that reprogramming is not required.

When designing the fuel trains, the burner / boiler manufacturer can choose from a total of 7 valve families. The large number of individual parameterization choices (program times, configuration of inputs / outputs, etc.) enable him to make optimum adaptions to the specific application.

The universal SQM4... actuators are driven by stepper motors and can be positioned with high resolution. The characteristics and settings of the actuators are defined by the basic unit of the LMV5...

2.2 Block diagram inputs / outputs

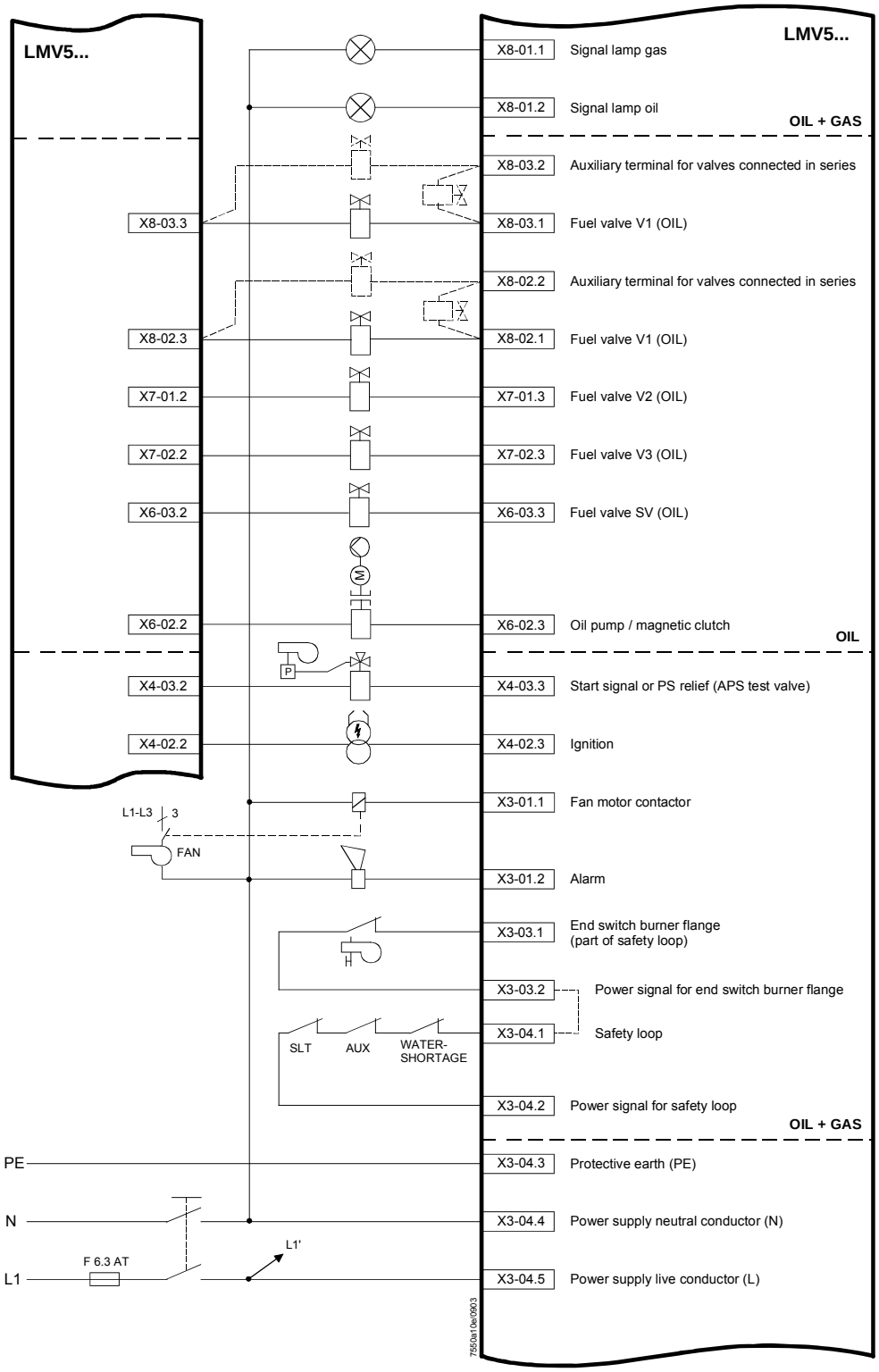

Block diagram (cont'd)

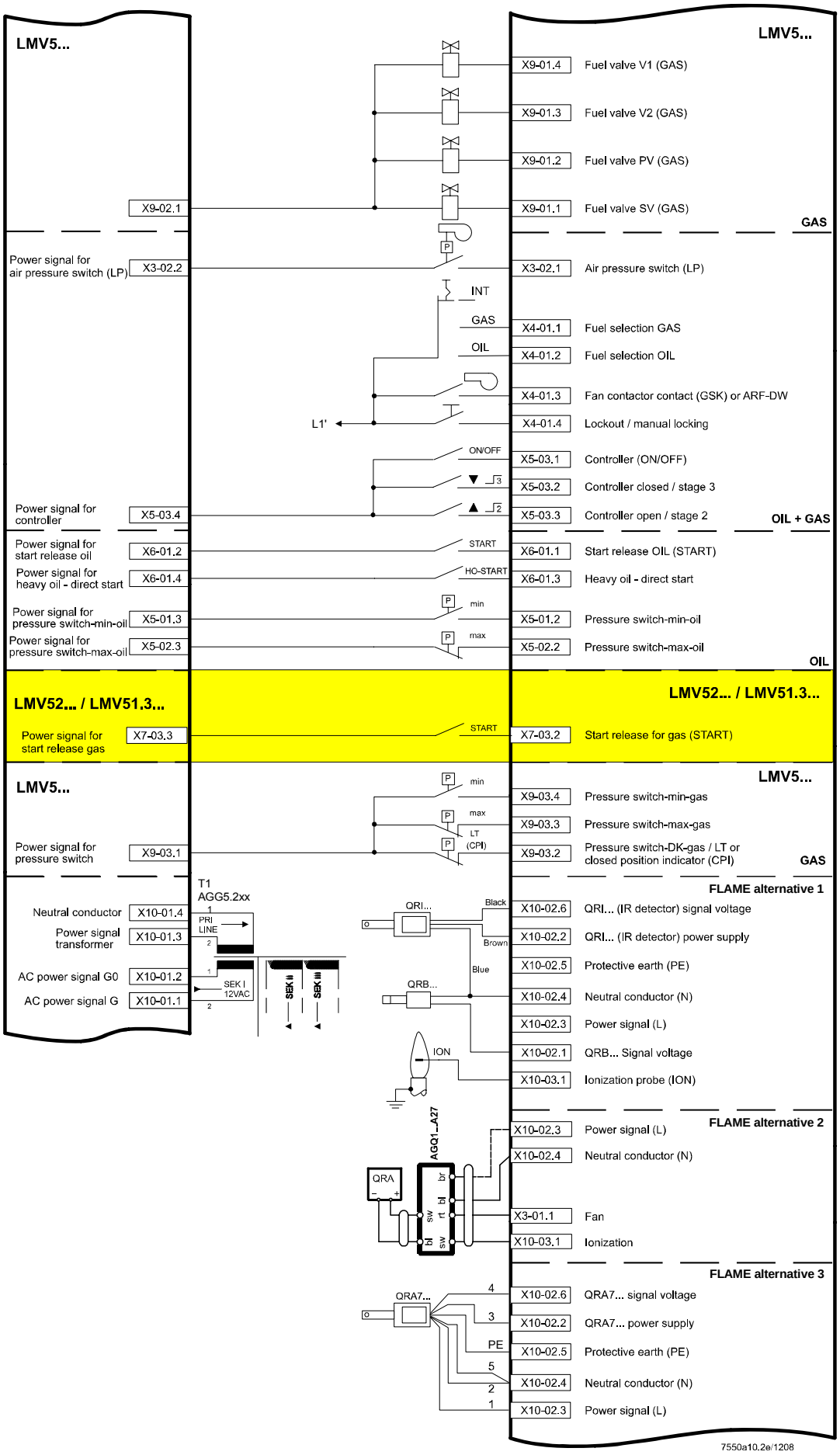

Block diagram (cont'd)

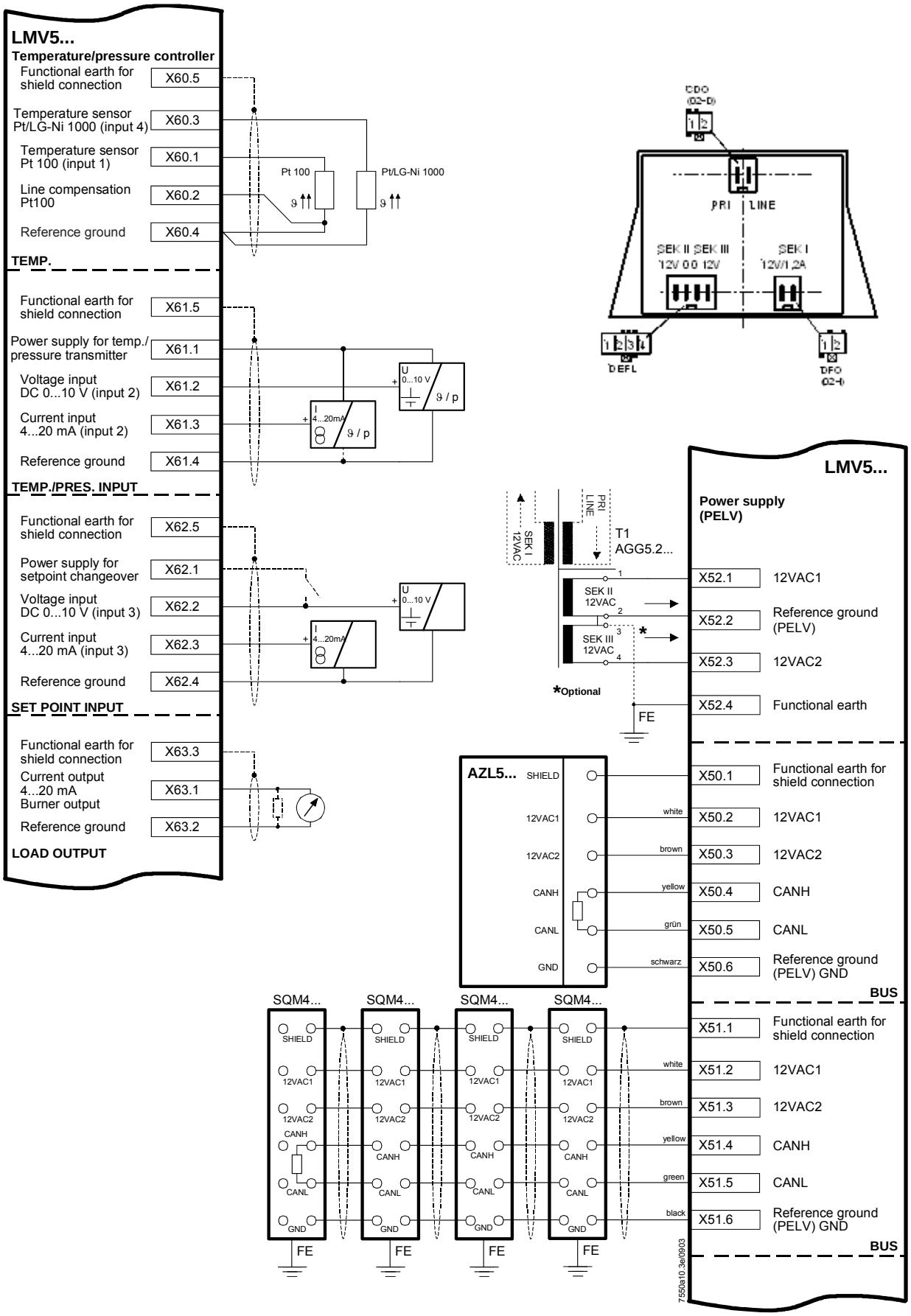

3 Fuel train applications (examples)

Gas direct ignition

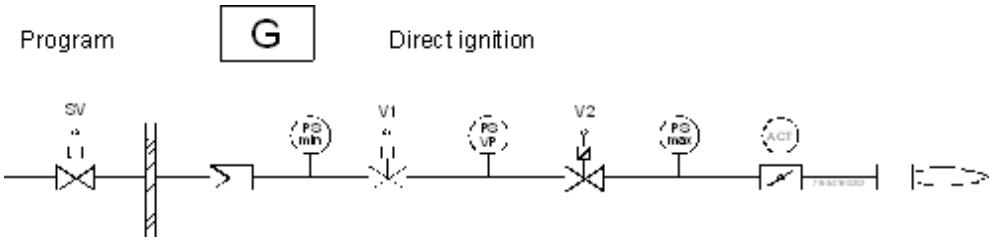

Gas pilot ignition 1

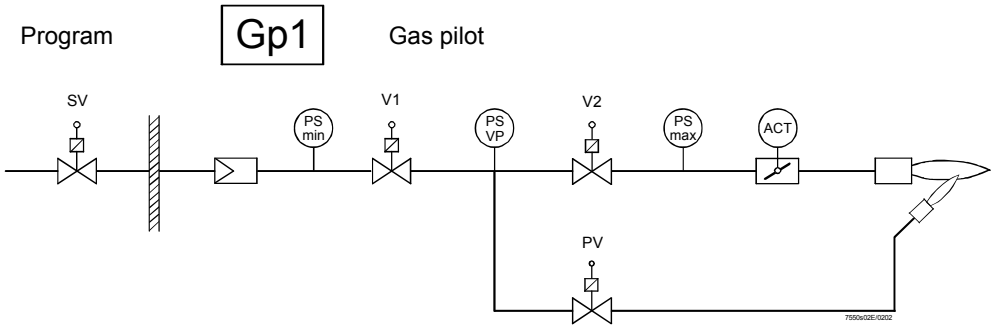

Gas pilot ignition 2

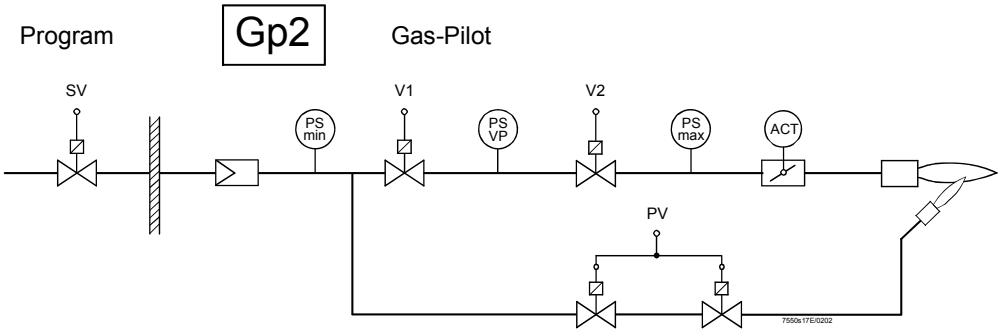

Fuel valve control sequence

Gas (always modulating)

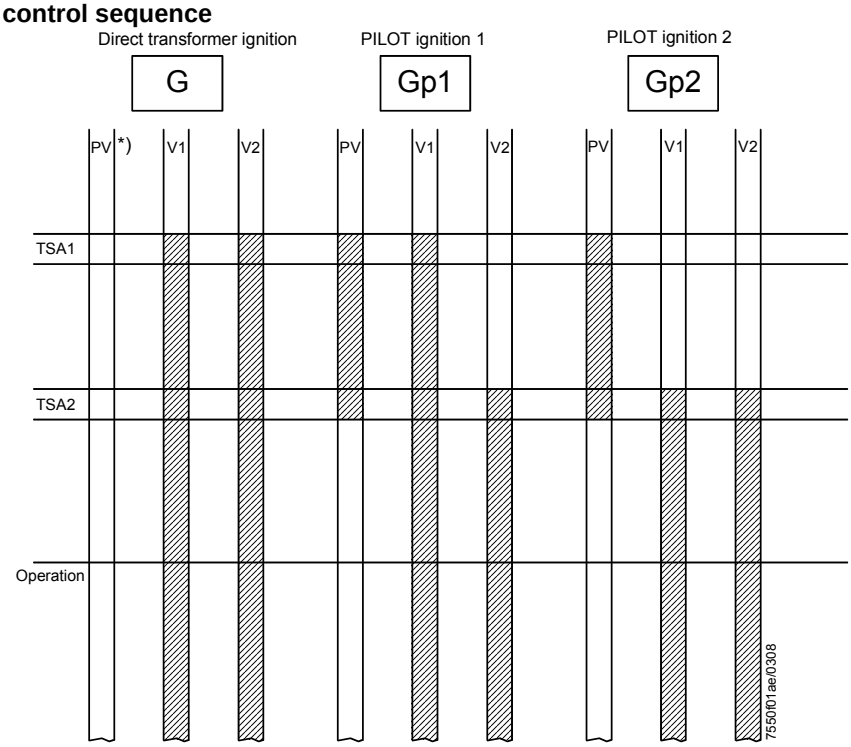

Legend to fuel trains:

*)	Not used
1)	Preheating device
V	Fuel valve
VP	Gas valve proving
PS	Pressure switch
HE	Heating element
HO	Heavy oil
LO	Light oil
SA	Actuator
NO	**N**ormally **O**pen
SV	Shutoff valve (outside the building)
PV	Pilot valve

Fuel train applications
(cont'd)

Direct ignition with light oil, multistage

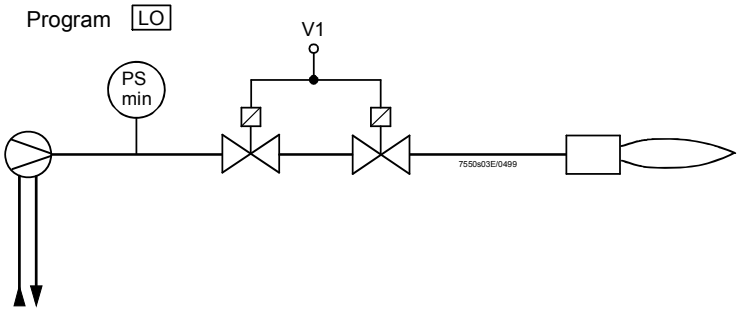

Single-stage burner

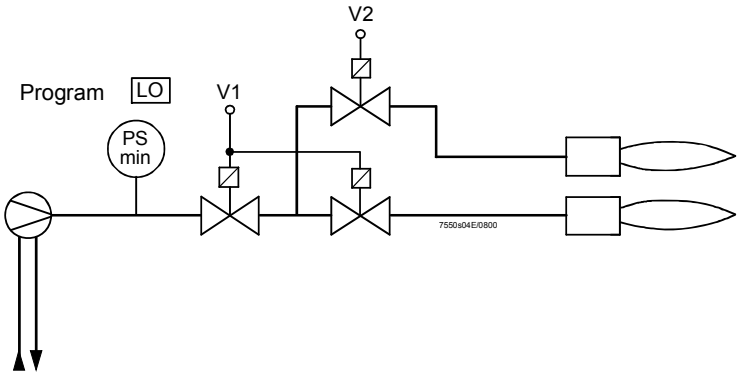

2-stage burner

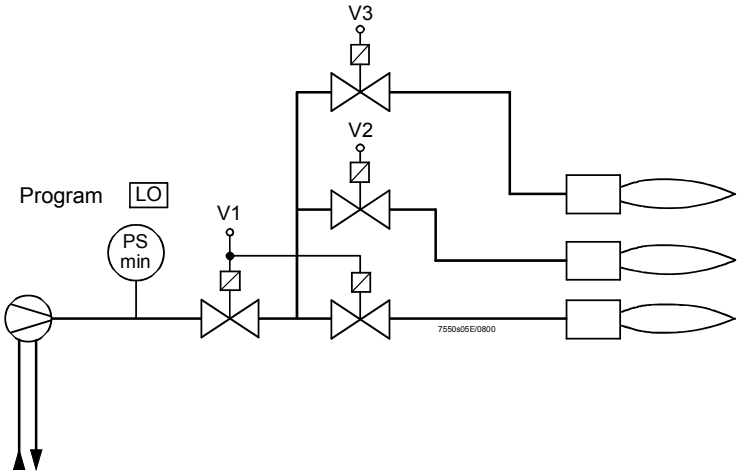

3-stage burner

Direct ignition with light oil, modulating

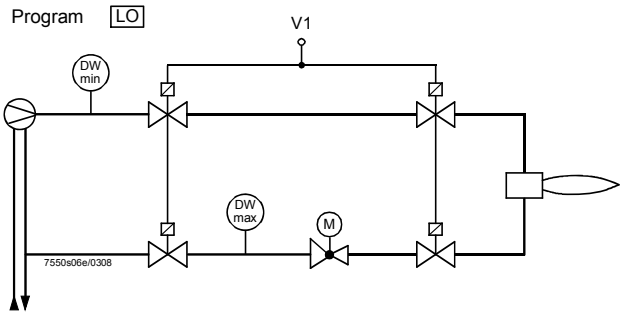

Modulating burner (without shutdown facility for adjustable head)

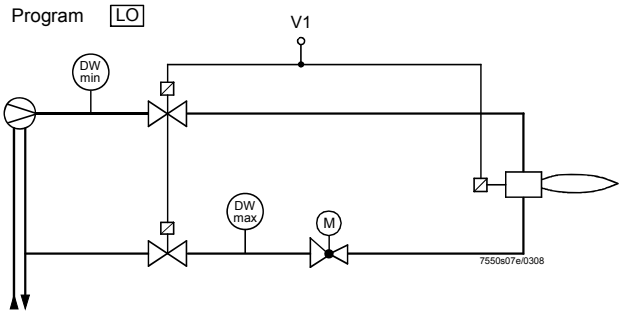

Modulating burner (with shutdown facility for adjustable head)

Fuel valve control sequence

Light oil (direct transformer ignition)

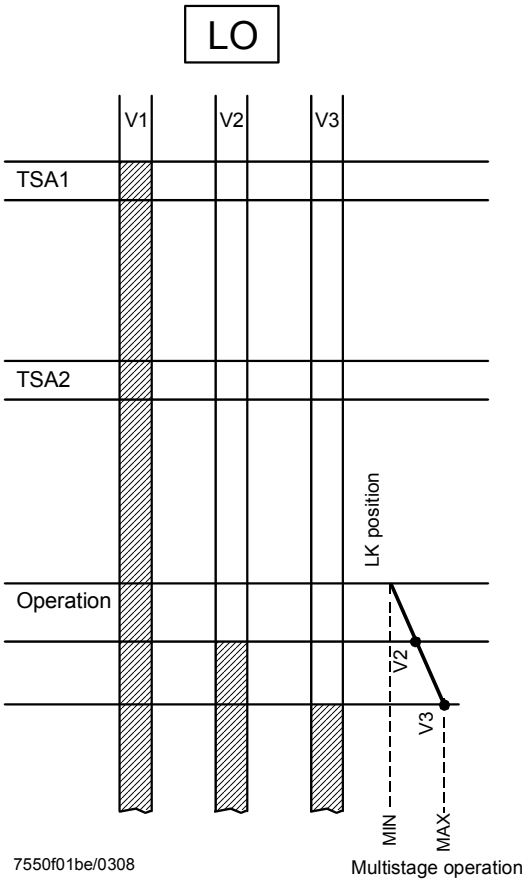

Direct ignition with heavy oil, multistage

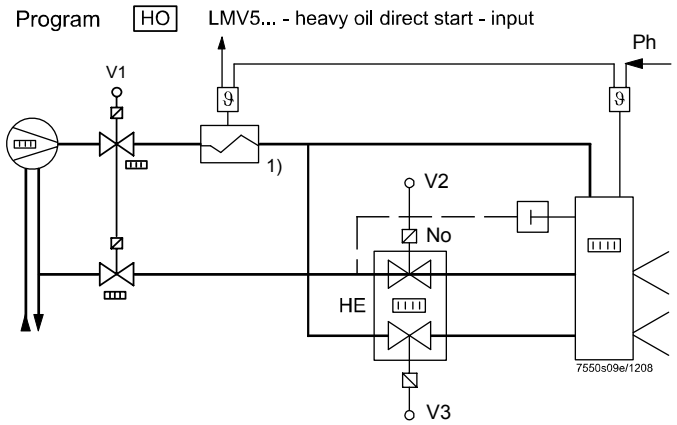

2-stage burner

Direct ignition with heavy oil, modulating

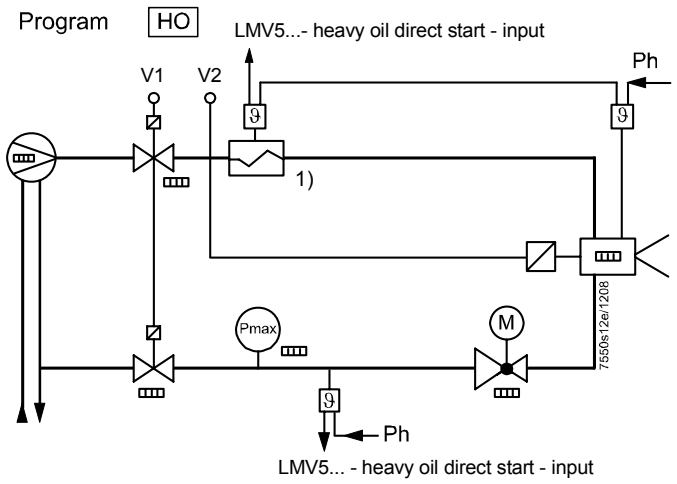

Modulating burner
Circulation from phase 38, max. 45 s, as soon as direct heavy oil start = ON in phase 38:
→ Phase change in phase 40
Direct heavy oil start = OFF at the end of phase 38
→ Repetition (max. 3 times in total)

Fuel valve control sequence

Heavy oil (direct transformer ignition)

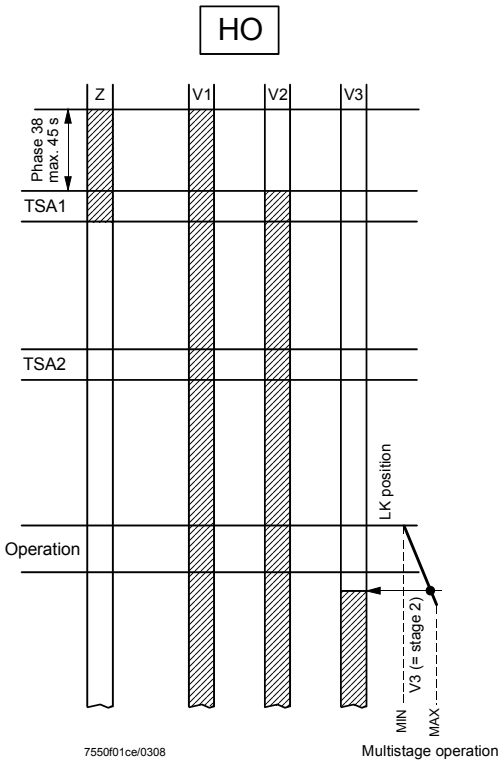

Note on dual-fuel burners

Gas trains **G**, **Gp1** and **Gp2** [1] can be randomly combined with oil trains **LO** and **HO** for operation with dual-fuel burners since these fuel trains operate independently.

Oil trains **LOgp** and **HOgp** are designed for ignition with a gas pilot. They must **always** be combined with a special gas train **Gp2** for operation with a dual-fuel burner.

1) With **Gp2** permitted with
HW 01.C0 and SW V01.40 or higher

Dual-fuel burner gas / light oil with gas pilot ignition

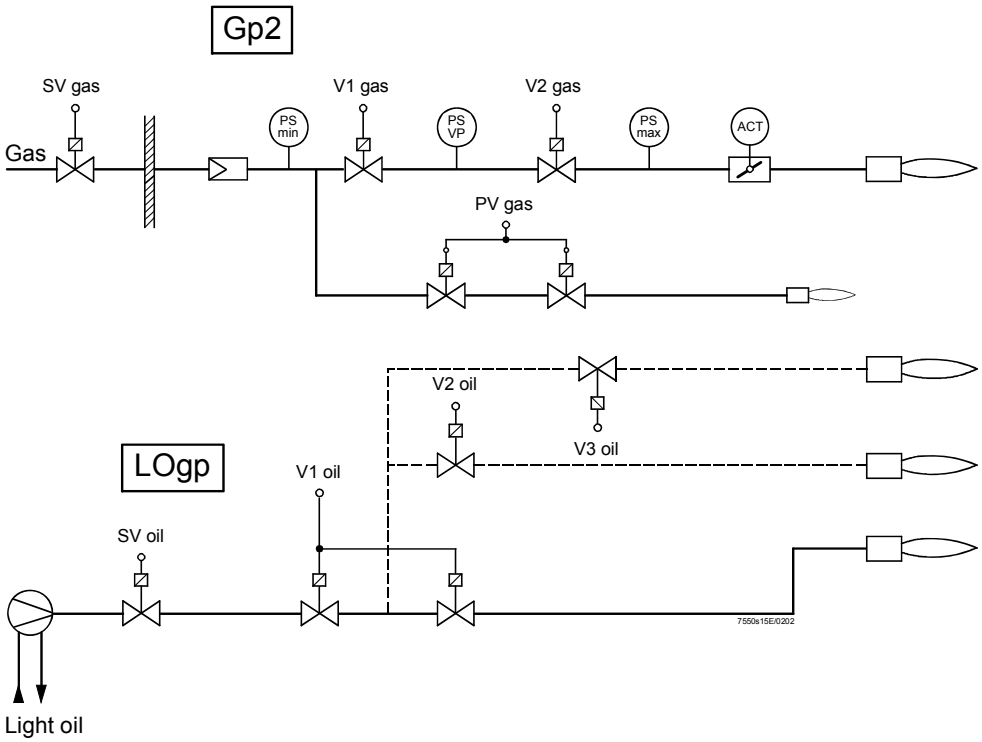

Fuel valve control sequence

Light oil (with gas pilot ignition)

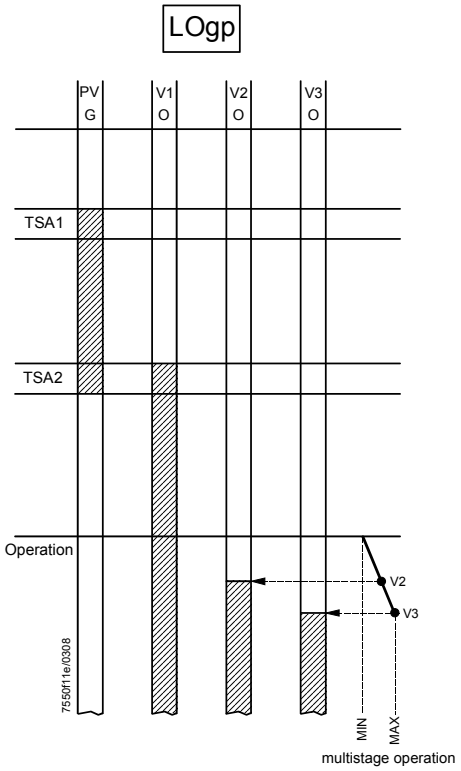

Dual-fuel burner gas / heavy oil with gas pilot ignition

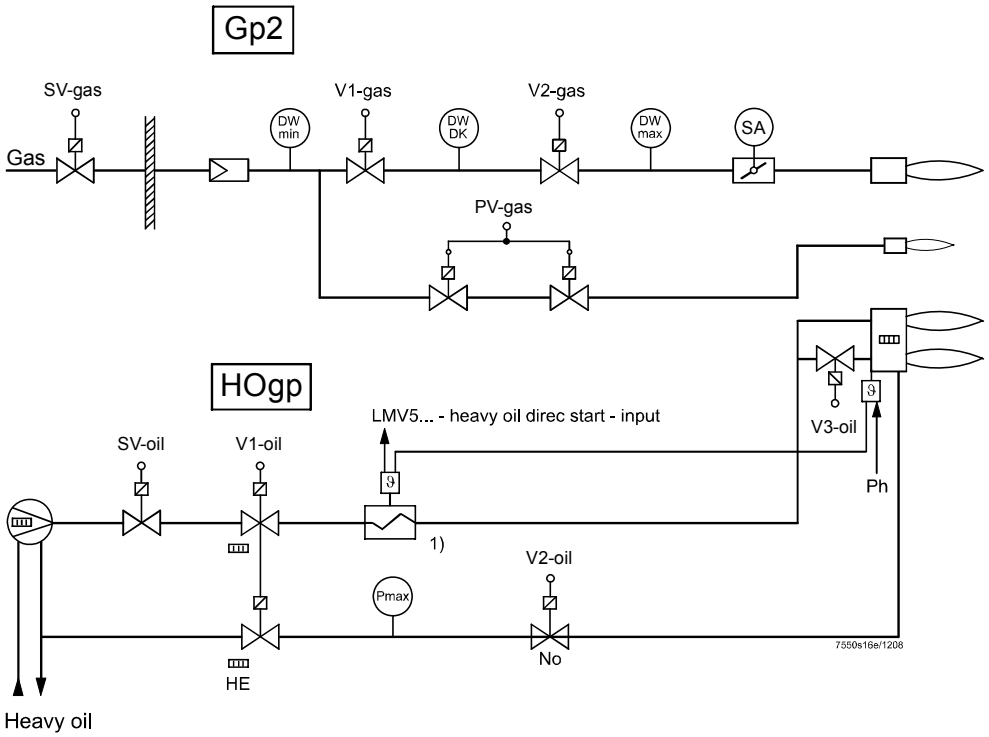

Fuel valve control sequence

Heavy oil (with gas pilot ignition)

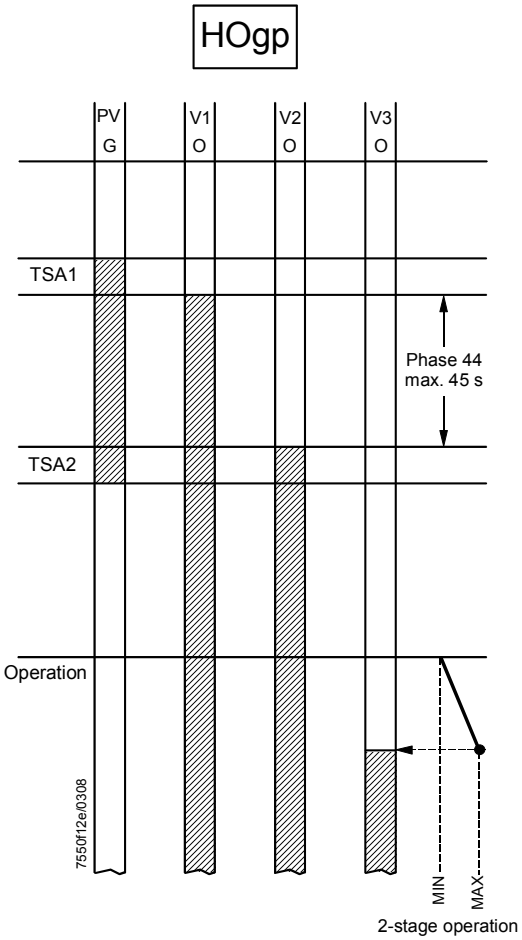

Circulation from phase 44, max. 45 s, as soon as direct heavy oil start = ON in phase 44:
→ Phase change in phase 40
Direct heavy oil start = OFF at the end of phase 44
→ Repetition (max. 3 times in total)

4 Burner control

4.1 Description of inputs and outputs

This chapter describes the basic characteristics of the burner control's inputs and outputs. For the valuation of inputs and the activation of outputs, *refer to the «Sequence diagrams»*.

Flame signal input and flame detector X10–01 and X10–03

The following connection facilities are provided:

- QRI... (infrared flame detector) for continuous or intermittent operation
- Ionization probe for continuous or intermittent operation
- QRB... flame detector for intermittent operation only
- QRA2… / QRA4.U / QRA10… flame detector with AGQ1… for intermittent operation at AC 230 V
- QRA7... for continuous or intermittent operation

Continuous operation with the QRB… is **not** possible!

Do not use terminal X10-02/1. This also applies to the connection of idle lines if the LMV5... is used for continuous operation!

Caution!
The response time of flame detector leads to a prolongation of the second safety time (TSA2)!

Self-test function LMV5... / QRI... / QRA7...

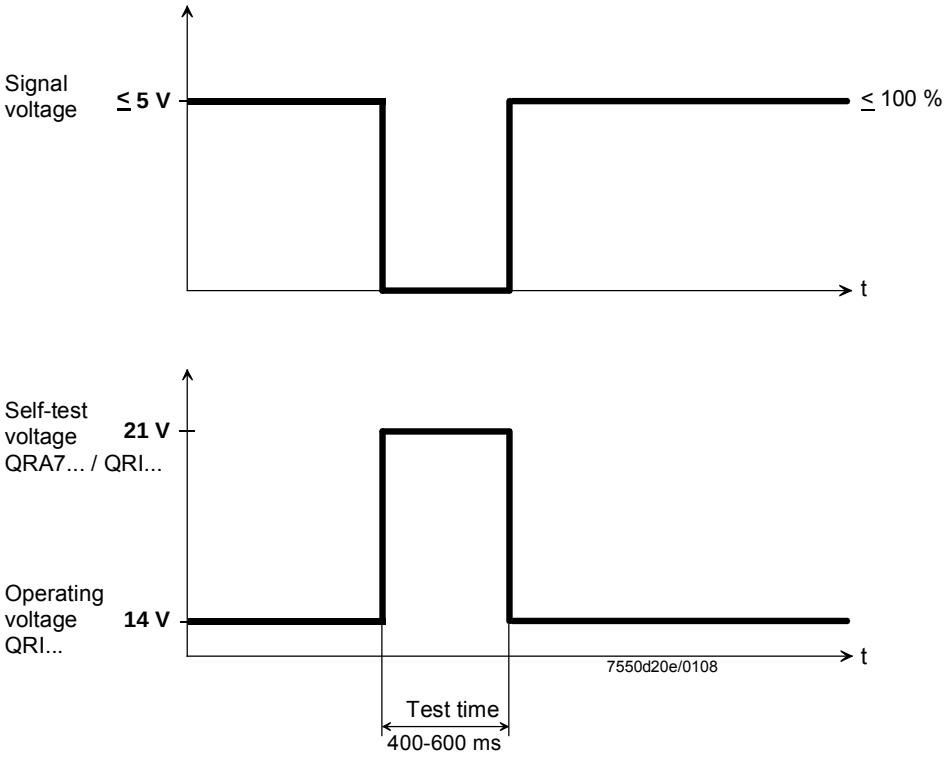

The self-test function of the QRI... / QRA7... is triggered by increasing the supply voltage to the level of self-test voltage. During the following test time, the signal voltage at the output of the QRI... / QRA7... changes to zero so that the LMV5… will receive the anticipated flame OFF signal as a response to the test. If the behavior is correct, operation is continued until the next test cycle is reached. The test cycle is dependent on the parameterization of the LMV5...

Separate flame supervision, only with LMV52...

The hardware of the LMV52... assigns the flame signals to 2 channels (channel «A» for QRI... / QRA7... or QRB..., and channel «B» for ION).
As an alternative for ionization current supervision – using the AGQ1… – the QRA2… / QRA4.U or QRA10… can be connected to the ionization input of the LMV5…
The connection / processing of the individual flame signals are selected via 6 parameters («Pilot phase», «Operating phase», «Extraneous light» – for both gas- and oil-firing).
The pilot phase covers phase 40 through phase 50 and operating phase 52 through 62. In all the other phases, the flame signal(s) is (are) evaluated via parameter «Extraneous light».

The parameters offer the following setting choices:

- *Single-detector operation* (corresponding to the LMV51..., plus error message if 2 flame detectors are connected)
- *QRI_B or ION* (parallel operation of QRI... / QRA.7... / QRB... and ION, flame signal if 1 of the 2 channels indicates a flame)
- *QRI_B and not ION* (parallel operation of QRI... / QRA7... / QRB... and ION, flame signal if <u>only</u> the QRI... / QRA7... / QRB... indicates a flame)
- *QRI_B* (flame signal if the QRI... / QRA7... / QRB... indicates a flame; ION will not be evaluated)
- *ION and not QRI_B* (parallel operation of QRI... / QRA7... / QRB... and ION, flame signal if <u>only</u> ION indicates a flame)
- *ION* (parallel operation of QRI... / QRA7... / QRB... and ION, flame signal if ION indicates a flame; the QRI... / QRA7... / QRB... will not be evaluated)
- *QRI_B and ION* (both must indicate a flame; this selection is not available with the «Extraneous light» block)

Application example

Selective supervision of pilot ignition with ION, which means that the ION probe only detects the pilot flame. The main flame is supervised with the QRI... / QRA7...

Implementation

Parameter «Extraneous light» must be set to «QRI_B | ION», which means that extraneous light is detected if 1 of the 2 flame detectors indicates that a flame is present.
Parameter «Pilot phase» must be set to «ION», which means that in the pilot phases (phase 40 through phase 50), only ION will be evaluated (QRI... / QRA7... don't care).
Parameter «Operating phase» must be set to «QRI_B &/ ION», which means that in the operating phases (phase 52 through phase 62) only the QRI... / QRA7... may deliver a flame signal. With this kind of parameterization, a flame signal via ION in the operating phases will lead to loss of flame.

Technical data, flame supervision

Note: All measured voltages refer to connection terminal N (X10–02, terminal 4).

QRI (suited for continuous operation)

Supply voltage operation / test at terminal POWER QRI...
(X10–02, terminal 2) approx. DC 14 / 21 V

Required signal voltage at terminal FSV / QRI...
(X10–02, terminal 6) min. DC 3.5 V
Display flame approx. 50 %

Connection diagram

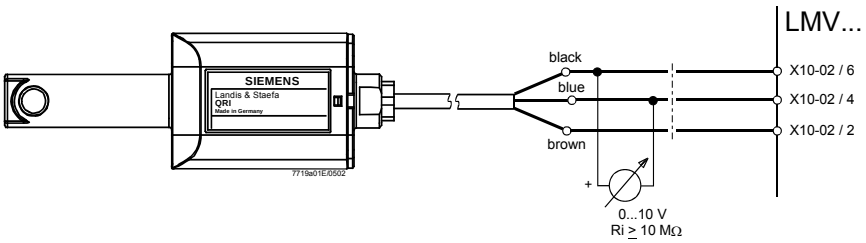

For detailed information, refer to Data Sheet N7719.

IONIZATION (suited for continuous operation)

No-load voltage at terminal ION (X10–03, terminal 1)	approx. U_{Mains}

Note: The ionization probe must be installed such that protection against electrical shock hazard is ensured!

Short-circuit current	max. AC 0.5 mA
Required detector current	min. DC 6 µA, display flame approx. 50 %
Possible detector current	max. DC 85 µA, display flame approx. 100 %
Permissible length of detector cable (lay separately)	100 m (wire-earth 100 pF / m)

Note

The greater the detector cable capacitance (cable length), the lower the voltage at the ionizations probe and, therefore, the lower the detector current. In the case of extensive cable lengths and high-resistance flames, it may be necessary to use low-capacitance cables (e.g. ignition cable).
The electronic circuit is designed such that impacts of the ignition spark on the ionization current will be largely eliminated. Nevertheless, it must be ensured that the minimum detector current required will already be reached during the ignition phase.
If that is not the case, the connections of the ignition transformer on the primary side must be changed and / or the location of the electrodes also.

QRA2… / QRA4.U / QRA10… with AGQ1…A27

For intermittent operation only.

Note

AGQ1… is only available for AC 230 V mains voltage.

QRA…

Power supply in operation	DC 280…325 V
Power supply in test mode	DC 350…450 V

For more detailed information about QRA2… / QRA10…, refer to Data Sheet N7712.

For more detailed information about QRA4.U, refer to Data Sheet N7711.

Flame detectors type QRA2… / QRA4.U / QRA10... must not be used when extraneous light suppression is activated since detector tests will not be made in that case!

LMV5…

Possible ionization current	Max. 10 µA
Ionization current required	min. 6 µA

AGQ1…A27

In connection with the LMV5…, ancillary unit AGQ1…A27 must be used.

Power supply	AC 230 V
Possible current	Max. 500 µA
Current required	min. 200 µA

Connection diagram

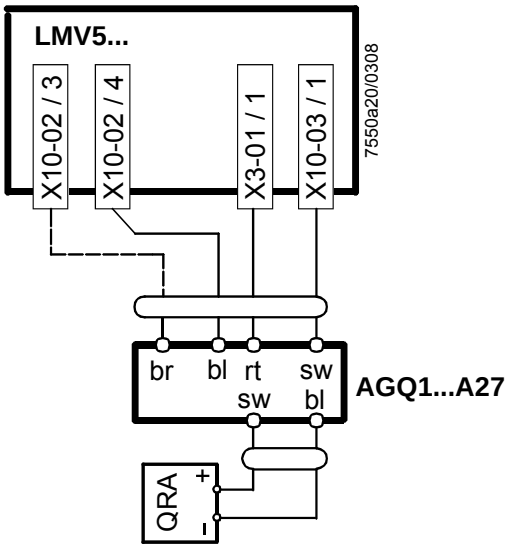

Assignment of LMV5…terminals:

X10-02 / 3	L
X10-02 / 4	N
X10-03 / 1	Ionization
X3-01 / 1	Fan

When laid together with other cables (e.g. in a cable duct), the length of the 2-core cable between QRA… and AGQ… must not exceed 20 m.
A maximum cable length of 100 m is permitted if the 2-core cable is run at a distance of at least 5 cm from other live cables.
The length of the 4-core cable between AGQ… and LMV5… is limited to 20 m.
A maximum cable length of 100 m is permitted if the signal line (ionization / black) is not run in the same cable but separately at a distance of at least 5 cm from other live cables.

QRA7… (suited for continuous operation)	Power supply for operation - QRA73A17 / QRA75A17 - QRA73A27 / QRA75A27	 AC 120 V AC 230 V
	Power supply for test via increasing the power supply for QRI... (X10-02 terminal 2)	From DC 14 V up to DC 21 V
	Required signal voltage (X10-02 terminal 6)	Min. DC 3.5 V
	Perm. length of detector cable - 6 wire cable - Signal cable no. 3, 4 and 5	 Max. 10 Max. 100 m (lay separately from L, N and PE in shielded cable)

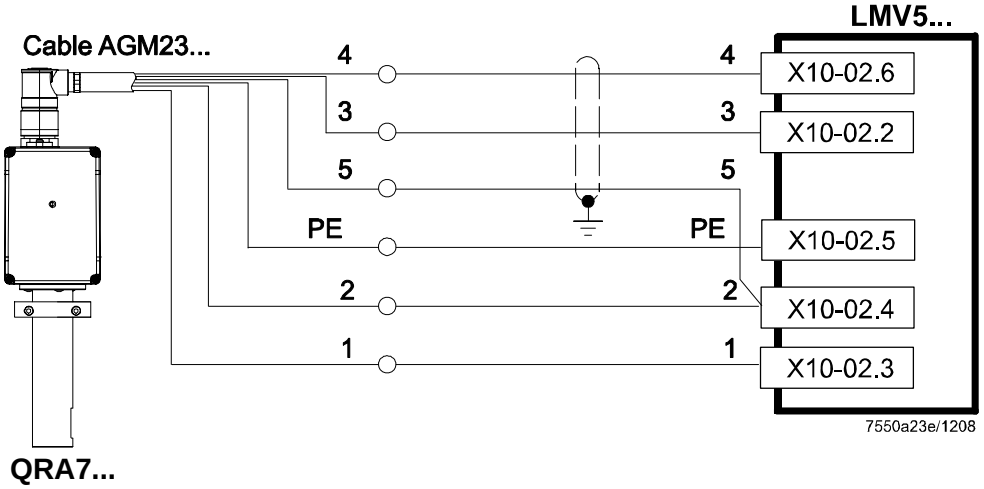

For more detailed information about QRA7…, refer to Data Sheet N7712.

Connection diagram

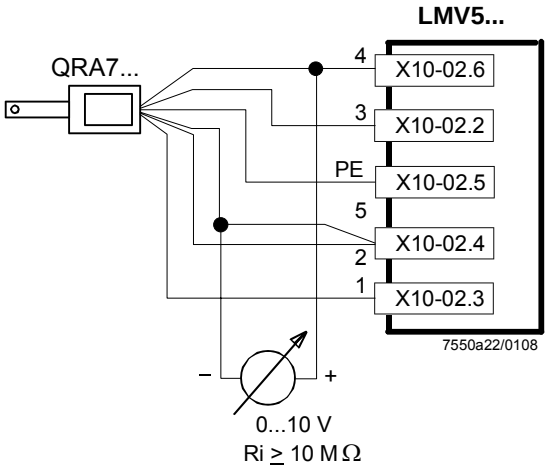

Assignment of LMV5… terminals:

X10-02 / 2	QRI... supply
X10-02 / 3	L
X10-02 / 4	N
X10-02 / 5	PE
X10-02 / 6	QRI... signal

QRB... (for intermittent operation only)

No-load voltage at the QRB... terminal (X10–02, terminal 1)	approx. DC 8 V
Required detector current required (with flame)	min. DC 30 µA, display flame 35 %
Permissible detector current (dark current with no flame)	max. DC 5 µA
Possible detector current	max. DC 70 µA, display flame approx. 100 %
Permissible length of QRB... detector cable (lay separately)	100 m (wire-wire 100 pF / m)

Notes

A detector resistance value of RF < 5 kΩ is identified as a short-circuit and, in operation, will lead to safety shutdown as if loss of flame had occurred.
Measurement of the voltage at terminal QRB... during burner operation gives a clear indication: If voltage drops below 1 V, safety shutdown will probably occur.
For that reason, before using a highly sensitive photoresistive flame detector (QRB1B or QRB3S), it should be checked whether such a detector is really required!
Increasing line capacitance between the QRB... terminal and mains live «L» adversely affects the sensitivity and increases the risk of damaged flame detectors due to mains overvoltages.
Separate routing of detector cables as specified in Data Sheet 7714 must be observed.

Configuration extraneous light

In the case of incinerator plant or other types of plant operating at combustion chamber temperatures of >650 °C, an extraneous light test must not be made.

Observe the relevant standards and regulations (e.g. extra supervision of the combustion chamber temperature)!

Parameter	*ExtranLightTest (on / off)*
	Response in case of extraneous light (start prevention / lockout)

Indication of flame AZL5…

For **indication of flame** (on the AZL5...), observe the following general rules:
The above percentage values are obtained when, for parameter «Standardize» (standardization of flame signal), the default setting is used.
The accuracy of the display is a maximum of ± 10 %, depending on the tolerances of the components.
It should also be noted that, for physical reasons, there is no linear relationship between the display and the detector signal values. This is especially obvious with ionization current supervision.

For more detailed information, refer to Data Sheet N7714.

Flame detectors type QRB… must not be used when extraneous light suppression is activated since detector tests will not be made in that case!

4.1.1 Digital inputs

SAFETY LOOP X3–04

This input serves for including the safety loop. The special feature of this input is that all signal source contacts connected in series here directly switch off the power supply to the fuel valves and ignition.

Typically, the following contacts are included in the safety loop:
- External burner switch ON / OFF
- Safety limit thermostat / safety pressure limiter (SLT / SPL)
- External temperature limiter / pressure switch, if required
- Water shortage switch

In the safety loop, temporarily switching contacts (<1 s) must not be wired (switch or other)!

FLANGE X3–03

- End switch burner flange (component of safety loop)

For diagnostics, the signal source contacts are combined for delivering the «Safety loop» message. If no signal is received, the burner will at least be shut down. What follows is a number of repetitions that can be parameterized.

Parameter	*SafetyLoop*

Lockout reset button X4-01

The system can be reset in 2 different ways:

1. Resetting on the AZL5... display and operating unit.

Characteristics

When the burner control has gone to lockout, a reset leads to the following reactions:
- The alarm relay will be deenergized and fault indication switched off
- The lockout position will be canceled

The function is only available when the unit is in the lockout position.
The system can be manually locked by pressing simultaneously the **Enter** and **Esc** buttons on the AZL5...
This function enables the operator to stop the system during programming should an emergency occur.

2. Resetting with the button at connection terminal «Reset» on the LMV5... basic unit

Characteristics

When the burner control has gone to lockout, a reset leads to the following reactions:
- The alarm relay will be deenergized and fault indication switched off
- The lockout position will be canceled

If the burner control is **not** in the lockout position and the lockout reset facility is activated, the unit will go to lockout.
If this kind of reaction is not desired, power for the reset button can be picked up from the alarm output, thus achieving the same reaction as described above under **1.**

Fuel selection with the fuel selector on the LMV5... X4-01

The fuel selector is given priority. It has the positions «INT», «GAS» and «OIL» and is to be connected directly to the LMV5... basic unit.
It is possible to switch between oil-fired and gas-fired operation.
When the fuel selector is set to «INT», one of the other 2 sources can be selected (building automation and control system **or** AZL5...).

Fan contactor contact (FCC) or flue gas recirculation pressure switch (FGR-PS) X4–01

This input is used for connecting a fan contactor contact (FCC) or a flue gas recirculation pressure switch (FGR-PS).

a) The input is active both with oil-fired **and** gas-fired operation. It serves for checking the position of the fan contactor. A signal is expected at this input after control of the fan.

Parameter	*Config_FGR-PS/GSK (FCC)*

b) The input is used for connecting an air pressure switch required for flue gas recirculation (only from LMV52...).

Parameter	*Config_ FGR-PS/FCC (ARF-DW)*

c) The input's function can be deactivated.

Parameter	*Config_ FGR-PS/FCC (deactivated)*

Inputs for external controller (ON/OFF) X5–03

When the external control loop is closed, the signal from the integrated controller (if present) is used to deliver the internal «Heat demand» information to the input.

– There is a demand for heat when this external controller signal is present and – if present and configured – there is a demand for heat from the internal load controller or the building automation system

When there is no more demand for heat, the burner will be shut down. Depending on the parameterization, the fuel valves will either be shut the moment the period of time is completed by the timer, or after the MIN load is reached → Part load shutdown. In operation with the internal load controller or with load control, the input can be deactivated via a building automation and control system. This means that a wire link at this controller input is not required. In operating mode 1 (ExtLR X5-03), the input is always active, deactivation is not active → Operating modes with load controller.

Parameter	*InputController (activated / deactivated)* [1)]

[1)] *(Parameter text) in Italics* = text displayed on the AZL5...

Note

The input is also valued with manual operation burner ON / OFF!

2 inputs (ON / OFF or STAGE2 / STAGE3)

(2 3)

X5–03

This input serves for the connection of an external controller with contact outputs. The input is only active when configured as «External load controller».

Parameter	*LC_OptgMode (ExtLC X5-03)*

2 operation modes are possible. The one active depends on the parameterization of the fuel / air ratio control system.

a) Multistage operation can be accomplished by using additional thermostats / pressure switches.
Input 2« » activates stage 2.
Input 3« » and input 2« » activate stage 3.

Parameter	*Operation Mode (Two-stage / Three-stage)*

b) The burner's output can be increased or decreased by means of a 3-position step controller output with 2 relays.
«▲» increases the output
«▼» decreases the output
If none of the 2 inputs is active, the burner's output is maintained at a constant level.
The shortest permissible positioning step is about 100 ms.

Parameter	*Operation Mode (Modulating)*

Air pressure switch (APS) X3–02

An air pressure switch can be connected to these terminals. Air pressure is anticipated after the fan has been switched on. If there is no pressure signal, safety shutdown will occur in any case. The input can be deactivated.

Parameter	*AirPressureTest (activated / deactivated)*

Pressure switch-valve proving-gas / leakage test or closed position indicator (CPI)
X9–03

The input can be configured either as a pressure switch – valve proving – input (pressure switch-valve proving) **or** as a closed position indicator input (CPI).

a) The input is only active when firing on gas and when valve proving is activated.
→ Valve proving

Parameter	*Config_PS-VP/CPI (PS-VP)*

b) CPI: The input is active in both gas- and oil-fired operation. It is used for checking the **gas** valves' fully closed position. For that purpose, the gas valves' contacts for the fully closed position are to be connected in series using this input.

Parameter	*Config_PS-VP/CPI (CPI or CPI Gas LMV52)*

Function extension CPI Oil, only with LMV52...

With the LMV52..., this input has been extended by the function of a CPI contact for oil valves. Setting «CPI Gas» corresponds to the function of the LMV51...

c) In phase 54 through phase 60 of gas-fired and oil-fired operation, the input is checked for «Off» (valve fully open). The CPI contacts of the gas and oil valves must be connected in series and then to this input.

Parameter	*Config_DW-DK/CPI (CPI Gas+Oil) (LMV52…)*

d) In phase 54 through phase 60 of oil-fired operation, the input is checked for «Off» (valve fully open) and, in the case of gas firing, for «On» (valve fully closed).

Parameter	*Config_DW-DK/CPI (CPI Oil) (LMV52…)*

Note on a, b), c), d)

If the signal received at this input does not correspond to the anticipated value, safety shutdown will occur in any case. The input can be deactivated by configuring the input as pressure switch-valve proving and by switching off valve proving (no leakage test).

Parameter	*Config_PS-VP/CPI (PS-VP)*
	ValveProvingType (No VP / VP startup / VP shutdown / VP stup/shd)

Pressure switch-min-gas, start release gas (DWmin-gas) X9–03

The input is used for connecting the gas pressure switch-min and the start signal, e.g. from the release contact of an external outside air damper. In that case, both signal sources are to be connected in series. With the LMV52..., only gas pressure switch-min is to be connected here; for start release, there is a specific input available (start release gas). The input is only active when firing on gas and in the LOgp and HOgp programs until the end of «TSA». It can be deactivated for oil programs LOgp and HOgp. The signal is anticipated in phase 21. If there is no gas pressure, the → gas shortage program will be activated. Loss of gas pressure / start signal causes the burner to shut down. The input can be deactivated.

Parameter	*GasPressureMin (activated / deact x OGP / deactivated)* [2)]

[2)] *(activated / deactivated)* Active inputs are checked for signal input.

There is a delayed reaction to loss of gas pressure during «TSA1» and «TSA2» to prevent shutdown caused by pressure shocks when the valves open.

Parameter	*PressReacTme*

Start release gas / CPI X7–03 (only with LMV52...)

The input is used for connecting the start signal, e.g. from the release contact of an external outside air damper.
The input is only active when firing on gas and in programs LOgp and HOgp until the end of TSA2.
The signal is anticipated in phase 21.
Loss of the start signal causes the burner to shut down.
The input can be deactivated.

Parameter	*StartReleaseGas (activated / deactivated / CPI Gas / CPI Gas+Oil / CPI Oil) (LMV52…)*

With the LMV52..., input «Start release gas» can alternatively be used as a CPI input. In that case, it offers the same functionality as the original CPI input. This is needed on applications that demand gas valve proving and CPI. If a «Start release gas» signal is required, it must be delivered via input «Pressure switch-min-gas» (same as with the LMV51...).

Pressure switch-max-gas, (DWmax-gas)
X9–03

The input is used for connecting the gas pressure switch-max. It is only active when firing on gas.
The signal is anticipated when «TSA1» starts.
If the gas pressure is exceeded, safety shutdown will occur in any case.
The input can be deactivated.

Parameter	*GasPressureMax (activated / deactivated)*

There is a delayed reaction to loss of gas pressure during «TSA1» and «TSA2» to prevent shutdown caused by pressure shocks when the valves open.

Parameter	*PressReacTme*

Pressure switch-min-oil (DWmin-oil)
X5–01

The input is used for connecting an oil pressure switch-min. It is only active when firing on oil.

a) It is anticipated that the pressure signal appears during preignition to be critically valued (with HOgp in phase 44). If there is no oil pressure, or if the oil pressure drops, safety shutdown will occur in any case. The signal will be valued from TSA1. If there is no oil pressure, safety shutdown will occur in any case.

Parameter	*OilPressureMin (activated)*

b)

Parameter	*OilPressureMin (act from ts)*

During preignition, there is no waiting for the oil pressure. The signal will be valued from TSA1. If there is no oil pressure, safety shutdown will occur in any case.

Note: This kind of parameterization is only permitted in case of individual system approvals.

c) The input can be deactivated.

There is a delayed reaction to loss of oil pressure during TSA1 and TSA2 to prevent shutdown caused by pressure shocks when the valves open.

Parameter	*OilPressureMin (deactivated)*
	PressReacTme

Pressure switch-max-Oil (DWmax-Oil)
X5–02

The input is used for connecting an oil pressure switch-max. It is active only when firing on oil.
The maximum oil pressure must not be exceeded. If exceeded, at least one safety shutdown will occur.
The input can be deactivated.

Parameter	*OilPressureMax (activated / deactivated)*

There is a delayed reaction to loss of oil pressure during «TSA1» and «TSA2» to prevent shutdown caused by pressure shocks when the valves open.

Parameter	*PressReacTme*

Start release-oil (START) X6–01

The input is used for connecting a start signal, e.g. from the release contact of an external outside air damper. It is only active when firing on oil.
The signal is anticipated in phase 21. If the signal is not delivered, or if it is lost, shutdown will occur.
The input can be deactivated.

Parameter	*StartReleaseOil (activated / deactivated)*

Direct heavy oil start (HO-START) X6–01

The input is used for connecting a heavy oil direct start signal with which circulation phase 38 with HO or phase 44 with HOgp can be shortened.
In the circulation phase, the waiting time for the signal is a maximum of 45 seconds. If the signal is not delivered, a home run will take place, followed by → repetition. The input is only active when firing on heavy oil (HO or HOgp).
The input can be deactivated.

Parameter	*HeavyOilDirStart (activated / deactivated)*

[2] *(activated / deactivated)* Active inputs are checked for signal inputs.

4.1.2 Digital outputs

Safety-related outputs, type SI
These contacts are read back by the microcomputers with the help of a contact feedback network (CFN) and then monitored for correct positions.

Non-safety-related outputs, type No-SI
These outputs are not monitored by CFN and, for this reason, can only be used for non-safety-related actuating devices are actuating devices that are secured in some other form (e.g. fans, oil pump / magnetic clutch, alarm).

Alarm output, type No-SI X3–01

A signal lamp or horn can be connected to this output.
The output will be activated when the unit is in the lockout position (phase 00).
This output can also be used to signal start prevention
→ signaling of start preventions
An active alarm output can be manually deactivated. Deactivation remains active until a lockout reset or a system reset occurs, or up to the next startup. Then, the alarm will be activated again. Deactivation only applies to the alarm output, lockout or start prevention continue to be active.

Parameter	*Alarm act/deact (activated / deactivated)*

Output fan, type No-SI X3–01

This output is used for controlling a fan power contactor (200 VA). When changing to the lockout position, the fan continues to run for an adjustable period of time.

When → continuous purging is activated, the fan runs in all phases. This mode functions only when using an air pressure switch relieve valve which, in phase 21, ensures that the fan pressure switch does not sense any pressure, thus facilitating checking.

Parameter	*PostpurgeLockout*
	ContinuousPurge (activated / deactivated)

Output ignition, type SI (IGNITION) X4–02

This output is used for connecting ignition transformers or electronic igniters.
When firing on gas, ignition is switched on just prior to «TSA1» in phase 38.

When firing on oil, there is choice of short preignition as with gas operation and long preignition. In the case of long preignition, ignition will be switched on when the fan starts to run in phase 22.

Parameter	*PreIgnitionTGas*
	PreIgnitionTOil
	IgnOilPumpStart (on in Ph38 / on in Ph22)

Outputs valves-oil, type SI (V...) X8–02, X8–03, X7-01, X7-02, X6-03

These outputs are used for connecting the oil valves in accordance with the selected fuel train. → Fuel trains, → sequence diagrams.

Parameter	*FuelTrainOil (LightOilLO / HeavyOilHO / LO w Gasp / HO w Gasp)*

(light oil with gas pilot and heavy oil with gas pilot may only be used in connection with Gp2)

Outputs valves -gas, type SI (V..., main valve, shut-off valve, pilot valve) X9–01

These outputs are used for connecting the gas valves in accordance with the selected fuel train. → Fuel trains, → sequence diagrams.

Parameter	*FuelTrainGas (DirectIgniG / Pilot Gp1 / Pilot Gp2)*

Operation indication gas, operation indication oil, type SI X8-01

This output shows the operating position of the LMV5…The outputs are connected directly to valve output «V1Oil» or «V1Gas». The operating position outputs for oil and gas must not be directly connected, since a wrong contact position of valve output 1 (unused fuel) would be detected, which would trigger lockout.

☞ During the valve proof sequence *Filling* the gas fuel valve V1 is controlled, so that the operation display *Gas* is activated for a short time!

Output oil pump / magnetic clutch, type No-SI X6–02

a) Applications with a separate oil pump or magnetic clutch

This output can be used for connecting an oil pump or a magnetic clutch for an oil pump. The switch-on time can be parameterized together with preignition. In the case of dual-fuel burners, short preignition must be used (phase 38). In the case of long preignition, the oil pump is switched on in phase 22 together with ignition; in the case of short preignition, in phase 38. With the heavy oil programs (heavy oil HO, heavy oil with gas pilot), the oil pump with short preignition is already activated in phase 36 to ensure oil pressure is available when circulation starts.

Parameter	*OilPumpCoupling (Magneticcoupl)*
	IgnOilPumpStart (on in Ph38)

b) Single-fuel applications with direct coupled oil pump
On applications where the oil pump is coupled directly to the fan motor, the shutoff valve oil can be connected to that output. The output is always activated when the fan operates, plus another 15 seconds after the fan has been switched off. If «Directcoupl» is selected, long preignition will automatically become active. Direct coupling is only permitted in the case of oil-firing only.

Note:
With both variants, parameter *OnTmeOilIgnition* can be left on «On in Ph38». The short or long preignition will then automatically be correct, depending on the selection of *OilPumpCoupling.*

Parameter	*OilPumpCoupling (Directcoupl)*

Output «Start signal» or «pressure switch-valve» (air pressure switch test valve) type No-SI (START) X4–03

Depending on parameterization, the output can be used for a start signal or for a pressure switch relieve valve.

a) The start signal is used for controlling an outside air damper. When actuating the fresh outside air damper's end switch, which is fed back to the start release inputs of the LMV5..., the startup sequence will be continued.

Parameter	*Start/PS-Valve (StartSignal)*

b) In this configuration, a 3-port valve for testing (no pressure) the air pressure switch (APS) can be connected. During the test, the valve is controlled.

Parameter	*Start/PS-Valve (PS Relief)*

c) When using this configuration, a valve for testing (no pressure) the air pressure switch (APS) can be connected. The valve is controlled while the fan is running. During the test, the valve is deenergized.
This valve is required when parameterizing *NormDirectStart (NormalStart / DirectStart)* → direct start for testing the air pressure switch if *ContinuousPurge* is parameterized *(activated)* → continuous purging.

Parameter	*Start/PS-Valvel (PS Relief_Inv*)

4.2 Control sequence

The sequence diagrams show the control sequence in detail (*refer to Sequence Diagram*).

4.2.1 Parameters

Time parameters

The most important time parameters for the control sequence are the following (for values, refer to «Setting Lists», I7550):
- Prepurge time
- Preignition time / circulation time heavy oil
- Safety time 1 (TSA1)
- Safety time 2 (TSA2)
- Interval 1
- Interval 2
- Postpurge time 1 (t8-1) with flue gas recirculation damper shut (this part of the postpurge time is always executed)
- Postpurge time 3 (t8-3) with flue gas recirculation damper open (this part of the postpurge time will be interrupted when there is demand for heat)
- Postpurging in the lockout phase (if fan motor (G) = ON before lockout occurred)

All the times mentioned above – with the exception of «Postpurging in the lockout phase» – depend on the type of fuel, which means that different times can be set for oil and gas.
The prepurge time and the safety times are safety-related. This means that, using the AZL5…, the heating engineer can only readjust them in the «safe» direction (against internal maximum or minimum values).
In other words, «ts» times can only be shortened and «tv» times can only be extended.

4.2.2 Gas valve proving

Gas valve proving is only active when firing on gas.
When a leak is detected, the gas valve proving function ensures that the gas valves will not be opened and that ignition will not be switched on. Safety shutdown will take place.

Example

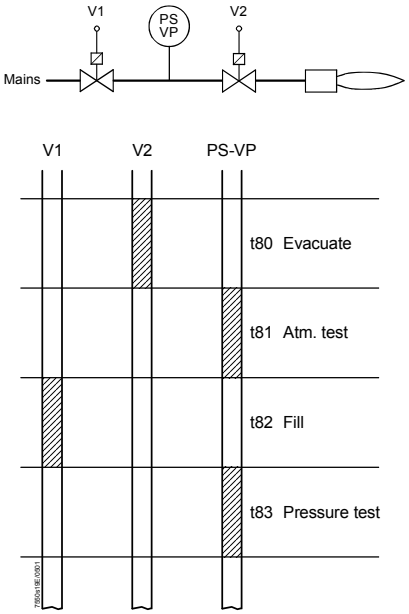

With gas valve proving, first the gas valve on the burner side is opened to bring the test space to atmospheric pressure.
After the valve has closed, the pressure in the test space must not exceed a certain level.
Then, the gas train is filled by opening the gas valve on the gas network side.
After shutting the gas valve, the gas pressure must not drop below a certain level.

It is possible to parameterize whether gas valve proving shall be performed. Also, the time can be set. Gas valve proving can be carried out during startup, shutdown, or in both phases.

Recommendation

Perform gas valve proving during shutdown.

The evacuation and filling times as well as the test times at atmospheric pressure or mains pressure must be set by the OEM, for each individual plant and in accordance with the requirements of EN 1643.

In particular, it must be ensured that the 2 test times will be set correctly. It must also be checked whether - on the specific application - it is permitted to introduce into the combustion chamber the gas required for testing.
The test times are safety-related.
After a reset, or in the event gas valve proving has been aborted or prevented, the burner control will carry out gas valve proving during the next startup sequence (only if gas valve proving is activated).
Examples of aborted gas valve proving:
When the safety loop or the start prevention input for gas (containing pressure switch-min) opens during gas valve proving.

If gas valve proving is parameterized with «startup **and** shutdown», the gas valves must perform additional switching cycles. This means that wear and tear of the gas valves will increase.

Parameter	*ValveProvingType (No VP / VP startup / VP shutdown / VP stup/shd)*
	VP_EvacTme
	VP_TmeAtmPress
	VP_FillTme
	VP_Tme_GasPress

Determination of valve proving leakage rate

$$Q_{Leakage} = \frac{(P_G - P_W) \cdot V \cdot 3600}{P_{atm} \cdot t_{Test}}$$

Legend

$Q_{Leakage}$	in l / h	Leakage rate in liters per hour
P_G	in mbar	**Overpressure** in the piping section between the valves to be tested, at the beginning of the test phase
P_W	in mbar	Overpressure adjusted on the pressure switch (normally set to 50 % of the gas inlet pressure)
P_{atm}	in mbar	**Absolute air pressure** (1,013 mbar normal pressure)
V	in l	Volume in the piping section between the valves to be tested, including the volume in the valves themselves, plus any pilot section (Gp1)
t_{Test}	in s	Test time

Examples

Refer to chapter «Commissioning instructions for LMV5... system» / gas valve proving / leakage test.

4.2.3 Special functions during the control sequence

Lockout phase (phase 00)

The safety loop relays are deenergized, the alarm relay is activated and lockout will be initiated, that is, Phase 00 can only be quit via manual reset.
Phase 00 is unlimited in terms of time.
During the lockout phase, the fan motor remains switched off if it was already deactivated in the safety phase. Otherwise, postpurging takes place in the lockout phase for a period of time that can be parameterized.

Parameter	*PostpurgeLockout*

Safety phase (phase 01)

The safety phase is an intermediate phase that is completed before lockout occurs. The safety loop relays are deenergized, but lockout will not yet occur. The alarm relay is not yet energized.
In the safety phase, the fan motor maintains the status of the previous phase, that is, it remains switched on if it was on before, and it remains switched off if it was off before.
If possible or permitted, safety checks or repetition counter checks will be made. Their results will decide on the transition to either «Lockout phase» or «Standby».
The duration of the safety phase varies (depending on the scope of testing), but lasts a maximum of 30 seconds.
This procedure serves primarily for suppressing undesired lockouts, caused by EMC effects, for instance.

Repetition counter

With heavy oil	Repetition counter value: Heavy oil direct start **Note:** Changes only become active after a reset (power on / reset)
With start release	Repetition limit value: Start prevention **Note:** Changes only become active after a reset (power on / reset)
With safety loop	Repetition limit value: Safety loop **Note:** Changes only become active after a reset (power on / reset)
With loss of flame	Repetitions limited value: Loss of flame **Caution:** - Changes be active first after reset (power on / reset) - With plants accordant EN 676 the value must be parameterized of «1», otherwise with loss of flame within «TSA2» a repetition occurred

The setting value equals the numbers of repetitions +1.
That is:
- Value = 1: no repetition
- Value = 2: equals **one** repetition

Caution!
The value 16 represents an unlimited number of repetitions!

Signaling start preventions

If startup is prevented, it is always displayed on the AZL5…
Startup is prevented only when there is demand for heat **and** if one of the start criteria is not satisfied.
The period of time from the instant start prevention occurs to indication on the AZL5... can be set via parameter *DelayStartPrev*.

It is also possible to signal start preventions via the alarm output. This function can be activated and deactivated via parameter *AlarmStartPrev*.

If «Signaling start preventions» is activated by means of the alarm relay, it is advisable to pick up power for the reset from the alarm output in order to prevent inadvertent manual lockouts.
The time from start prevention to signaling at the alarm contact can be set:

Parameter	*DelayStartPrev*
	AlarmStartPrev (activated / deactivated)
	AlarmDelay

Safety shutdown in standby mode

This parameter is used to determine the shutdown behavior should errors in standby mode occur, so that events (e.g. opening of safety loop) in standby mode which, in case of a heat request, would lead to start prevention, trigger safety shutdown and – when the respective repetition counter has elapsed – lockout.

Parameter	*ShutdwnStbyOnErr (activated / deactivated)*

Forced intermittent operation

No matter if the LMV5... is used for continuous operation or intermittent operation (e.g. when using a flame detector type QRB…), forced intermittent operation can be activated, this means short automatic shutdown after 23 hours and 50 minutes of uninterrupted operation.
As a general rule, it is recommended to activate forced intermittent operation or to leave it activated.
Forced intermittent operation should only be deactivated in plants where this function is not desired or is unacceptable.

Parameter	*ForcedIntermit (activated / deactivated)*

Prepurging

The prepurge position is approached in phase *Traveling to prepurging* (24).

Prepurge time

The prepurge time is determined via the following parameters:

Parameter	*PrepurgeTmeGas*
	PrepurgeTmeOil

These 2 parameters determine the minimum prepurge time, provided the following parameters do not become effective.
This means that the prepurge time is allocated to phases 30 through 34:
In phase 30, the time defined in *PrepurgeTmeTI1Gas(Oil)* is observed, followed by phase 32 or valve proving. Then, the time of *PrepurgeTmeGas* possibly remaining, or *PrepurgeTmeOil* in phase 34, is observed, but always *PrepurgeTmeTI3Gas(Oil)* as a minimum.

Prepurge time after safety shutdown

These parameters determine the prepurge time after the following events:
• Alterable lockout position
• Off time >24 hours (standby)
• Power failure (Power-on)
• Shutdown due to interruption of gas supply (safety shutdown)

Parameter	*PrepurgeSafeGas*
	PrepurgeSafeOil

If these times are used, they will be equally assigned to phases 30 and 34.

Parameter	*PrepurgeTmeTL1Oil*

This parameter determines the minimum prepurge time, part 1 and part 3.

Parameter	*PrepurgeTmeTL3Oil*

The minimum times will be observed in any case!

Example:
If the sum of prepurge time part 1 and part 3 exceeds *PrepurgeTmeXX* or *Prepurge-SafeXX*, this longer prepurge time applies!

Start without prepurging

When using valve proving and 2 class «A» fuel valves, prepurging will not be required (as per EN 676).
Skipping prepurging can be activated through parameterization.

In spite of an activated parameter, prepurging will be performed under the following conditions:
• Alterable lockout position
• Off time >24 h (standby)
• Power failure (Power-on)
• Shutdown due to interruption of gas supply (safety shutdown)

Parameter	*SkipPrepurgeGas*
	SkipPrepurgeOil

Deactivating valve proving does not automatically deactivate skipping of prepurging. Hence, the person making the settings must ensure that *SkipPrepurgeGas* will be activated only if permitted for the relevant type of plant.

Program stop function

To simplify burner adjustments during commissioning or in connection with maintenance work, the control sequence of the LMV5... can be stopped at the following points:

		Phase
a)	Air damper in the prepurge position	24
b)	Traveling to the flue gas recirculation position	32
c)	Ignition position	36
d)	Interval 1	44
e)	Interval 2	52
f)	Air damper in the postpurge position	72
g)	Traveling to the flue gas recirculation position	76

Activation takes place via the relevant menu items on the AZL5...

The program stop function is maintained until manual deactivation takes place. If the system stops at a program stop, a message will appear on the AZL5...

Parameter	*ProgramStop (deactivated / 24 PrePurgP / 32 PreP FGR / 36 IgnitPos / 44 Interv 1 / 52 Interv 2 / 72 PostPPos / 76 PostPFGR)*

Gas shortage program

When gas pressure is insufficient (input pressure switch-min-gas), the LMV5... ensures that a selectable number of start attempts will be made while observing a selectable waiting time.
The waiting time between the start attempts is automatically doubled (based on the value parameterized for the first waiting time).
The basic time is «DelayLackGas».

If, with the last of the parameterized start attempts, there is still a shortage of gas, the burner control will initiate lockout.

Parameter	*DelayLackGas*
	StartPrev

Sequence diagram

Start conditions must be satisfied.
n = Limitation of the number of start repetitions *(StartPrev)*. Example: 10
tDelay_G = Delay time gas shortage program *(DelayLackGas)*. Example: 10 s

Signal «OFF»
Signal «ON»

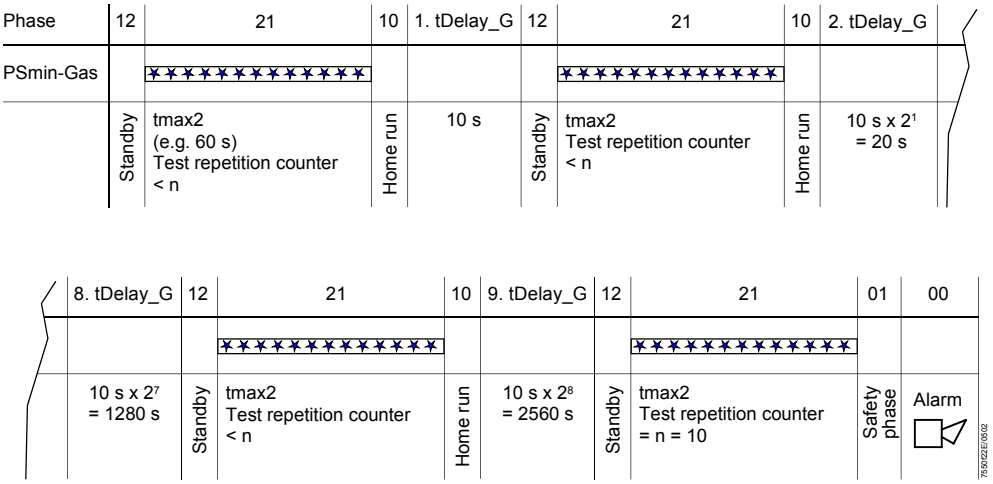

- Repetition counter will be reset after controlled shutdown
- When phase 22 is reached for the first time, delay time will be reset to the selected parameter value

Part load shutdown

To prevent the boiler from shutting down when operating at nominal load, fuel / air ratio control will first change to low-fire when there is no more demand from the controller. Only then will the valves be closed.
The maximum time «MaxTmeLowFire» for changing to low-fire operation can be parameterized.
If the time is set to 0.2 seconds, part load shutdown will be deactivated.

Parameter	*MaxTmeLowFire*

Normal / direct start

a) Normal start

With normal start, the fan will be deactivated also when there is a new demand for heat in phase 78 or when changing the type of fuel.

b) Direct start

When there is demand for heat in phase 78, there will be a direct change to startup via phase 79 to phase 24 without switching the fan off, so that the startup sequence will be accelerated.
But this would suppress checking the air pressure switch's OFF position in standby.

For this reason, the pressure switch relieve valve is controlled in phase 79. This valve ensures that the air pressure switch is relieved of the pressure produced by the fan so that it can signal «Air pressure OFF» although the fan motor is running, thus making possible a functional check of the air pressure switch.

For both variants, following applies:
If, during postpurging, there is another demand for heat, or if demand for heat is still present like in the case of type-of-fuel change, for example, that part of postpurging will be stopped in phase 78 in order to accelerate the following startup sequence.

Parameter	*NormDirectStart (NormalStart / DirectStart)*

Continuous fan operation

In the case of burners that could be damaged by return heat (e.g. several burners operating on one combustion chamber), continuous purging can be activated. In that case, the fan runs in all phases.
To enable the air pressure switch to be tested, a pressure switch relieve valve is required. This valve is controlled in phase 21 on burner startup, causing the air pressure to fall, so that the «Air pressure OFF signal» can be delivered.

Parameter	*ContinuousPurge (activated / deactivated)*

Continuous pilot control (only LMV52...)

For fuel trains using a pilot (Gp1, Gp2, LOGp, HOGp), control of the valve can be activated in phase 52 through phase 62.

Parameter	*ContinuousPilotGas (deactivated / activated)*
	ContinuousPilotOil (deactivated / activated)

Response to extraneous light in standby

As a response to extraneous light in the standby phase, it is possible to choose start prevention or lockout.

Parameter	*ReacExtranLight (Lockout / Startblock)*

4.2.4 Selection of fuel

Selection of fuel on the AZL5...

The type of fuel is selected via the menu on the AZL51…
The selection is only possible when the fuel selector is set to INT (or when no selector is connected).
Fuel selection is continuously stored via power-Off, so that a valid fuel selection is present when power returns.

Selection of fuel via BACS (Modbus)

Selection of fuel via eBUS (through BACS) is only possible when the fuel selector on the LMV51... basic unit is set to INT and, on the AZL5…, fuel selection via BACS has been selected.

Note: Fuel selection via BACS should be cyclically repeated.
There is no definition of priorities between fuel selection via BACS and fuel selection via the AZL5…, which means that the selection made last will be used.

Fuel changeover

After fuel changeover, the burner control maintains or changes to standby (→ normal start). Now, a new start is made (provided there is demand for heat), firing on the selected type of fuel.
If → direct start has been parameterized, fuel changeover can also take place on shutdown in phase 76. The fan will not be switched off.

4.2.5 Sequence diagrams

Gas direct ignition G

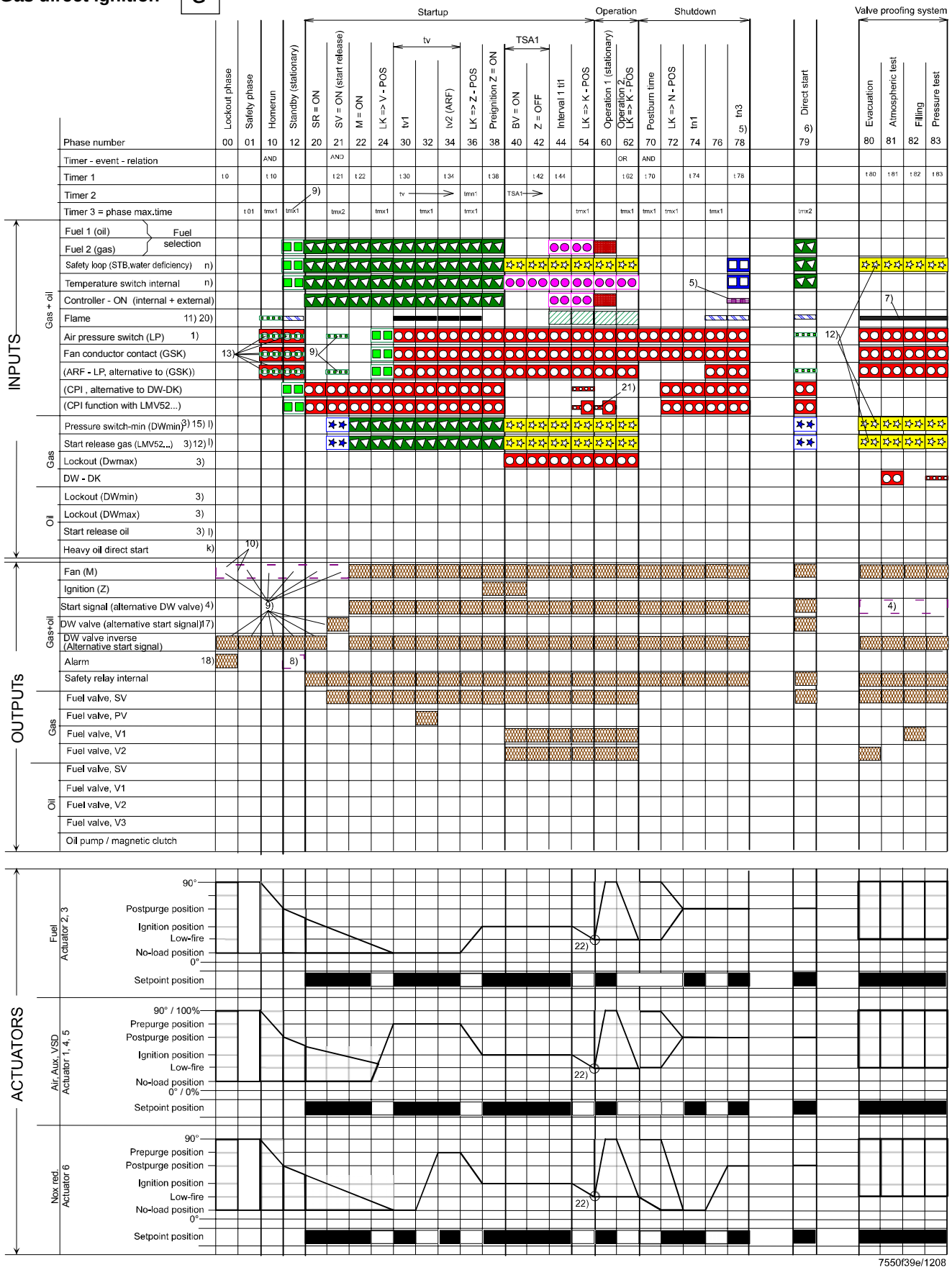

Program «Gas direct ignition (G)» (also refer to « Fuel train applications (examples)»)

Gas pilot ignition 1 **Gp1**

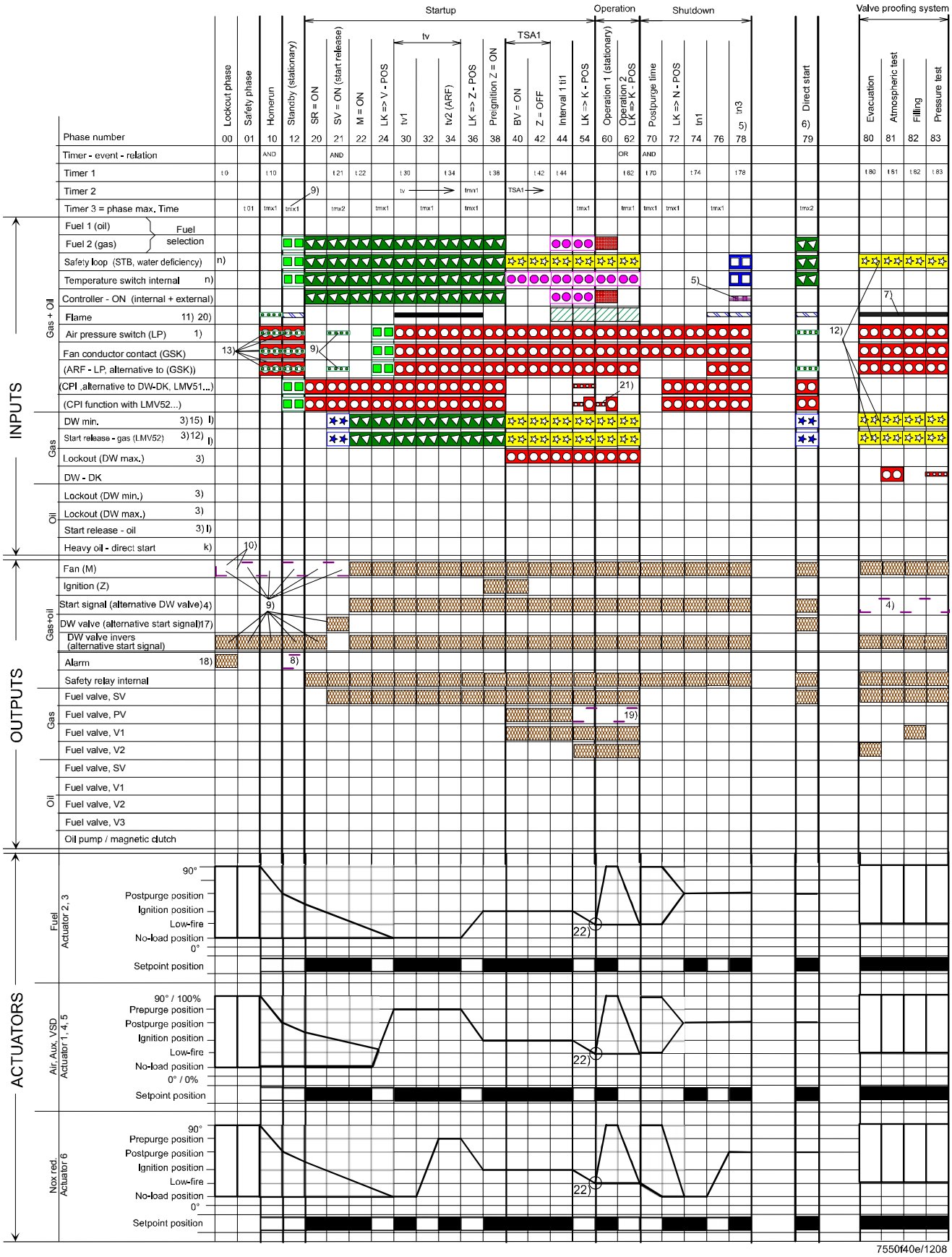

Program «Gas pilot ignition (Gp1)» (also refer to «Fuel train applications (examples)»)

Gas pilot ignition 2 **Gp2**

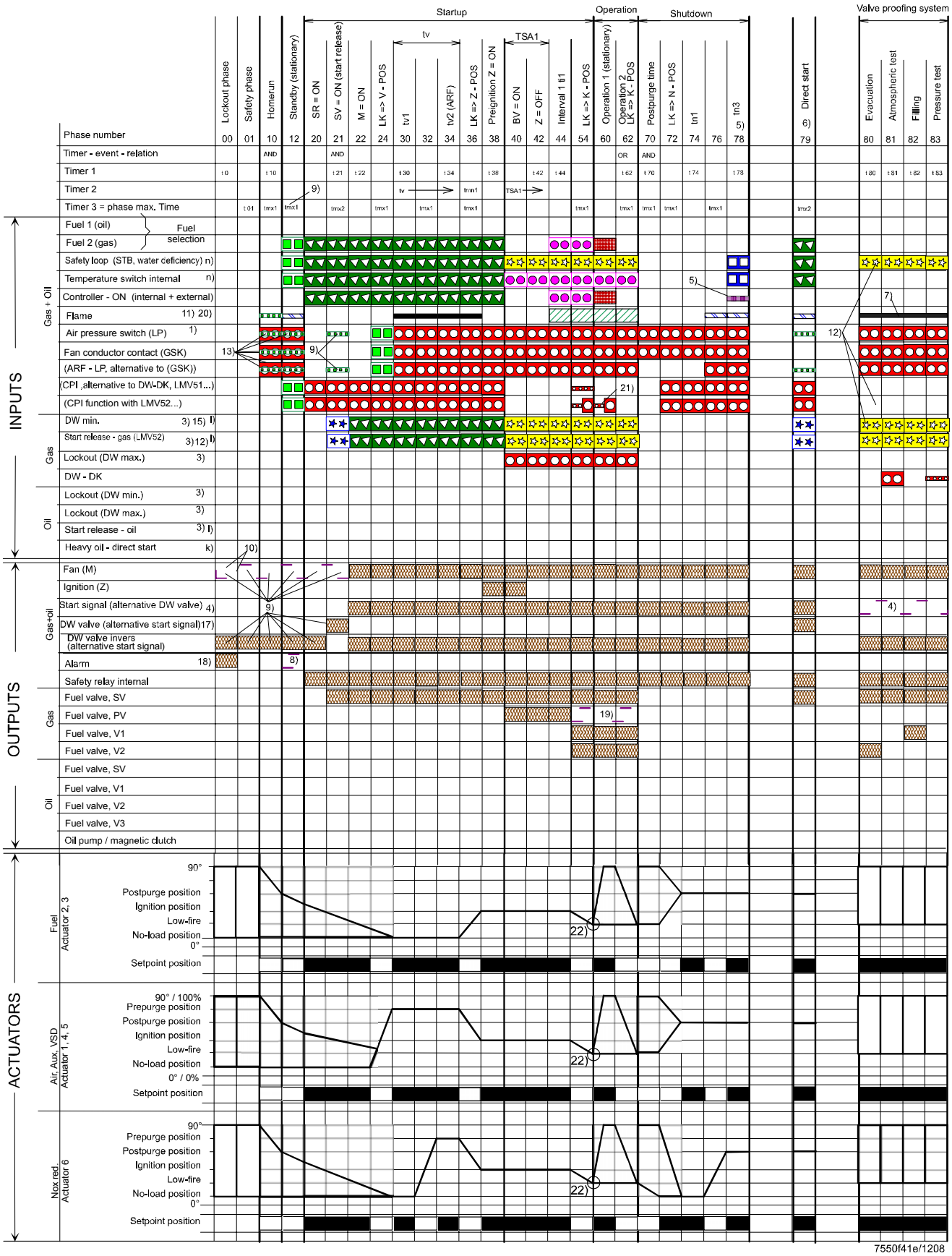

Program «Gas pilot ignition (Gp2)» (also refer to «Fuel train applications (examples)»)

Light oil direct ignition **LO**

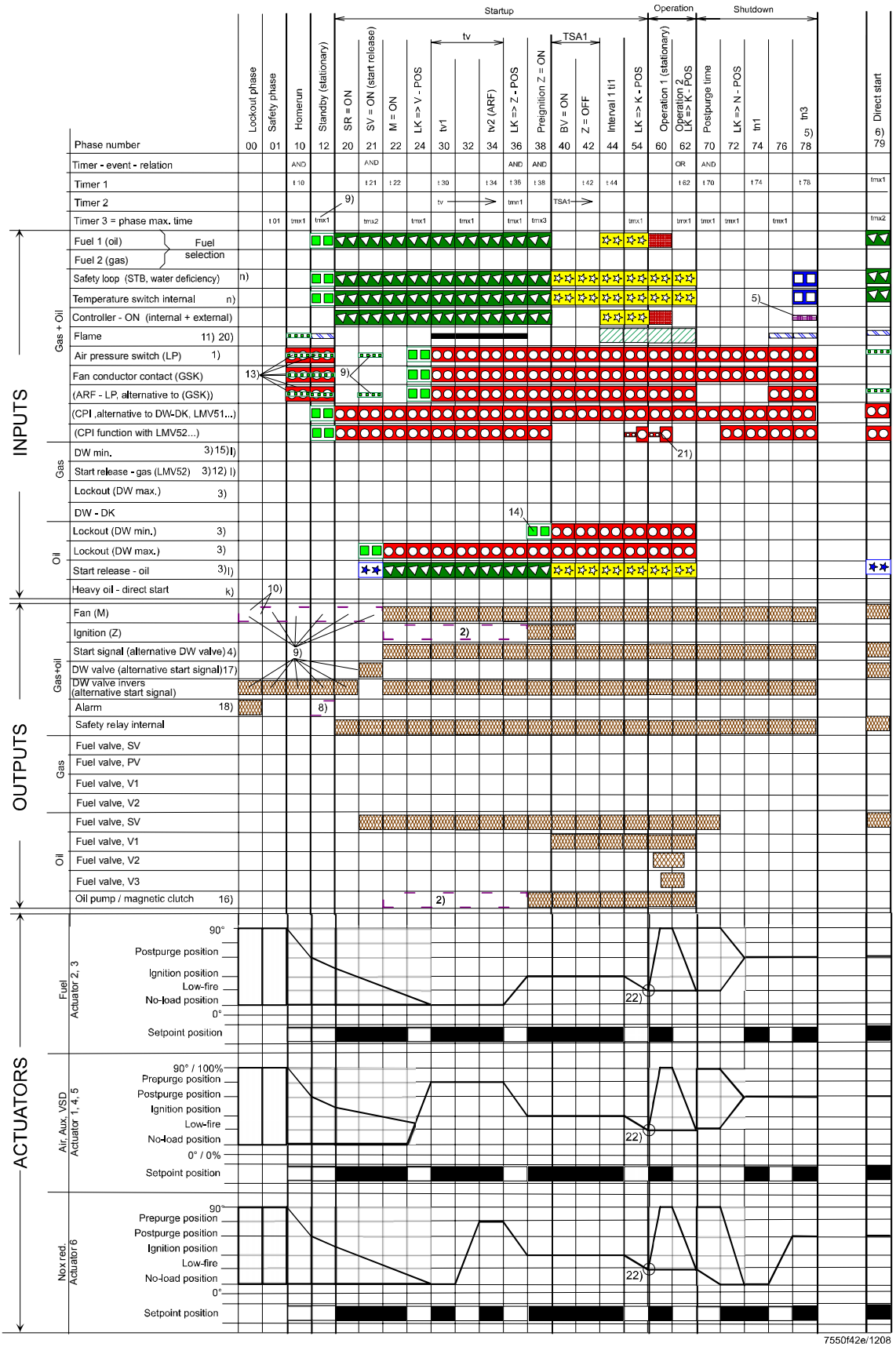

Program «Light oil (LO) direct ignition» (also refer to «Fuel train applications (examples)»)

Heavy oil direct ignition **HO**

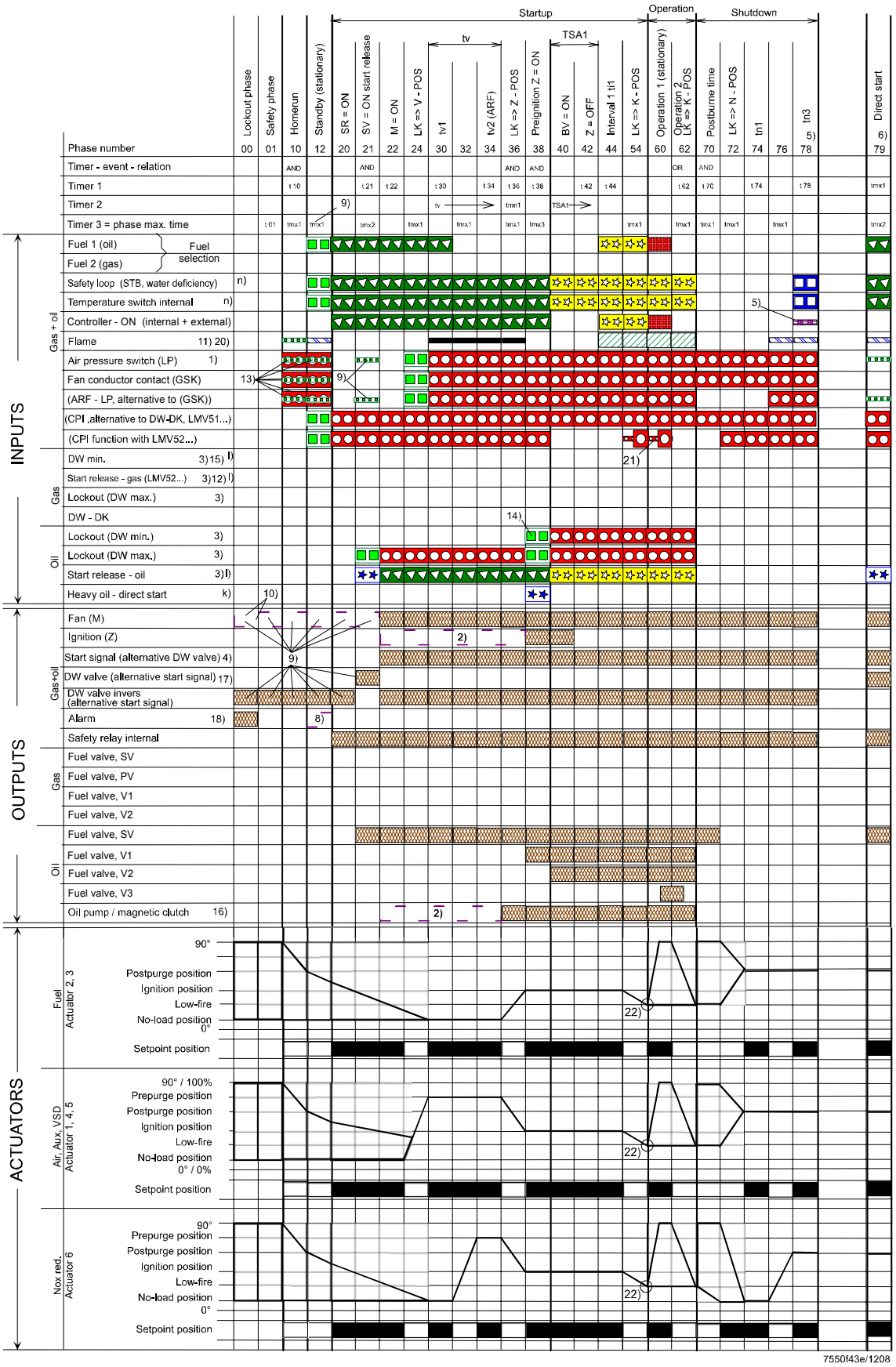

Program «Heavy oil (HO) direct ignition» (also refer to «Fuel train applications (examples)»)

Light oil with gas pilot ignition

LOgp

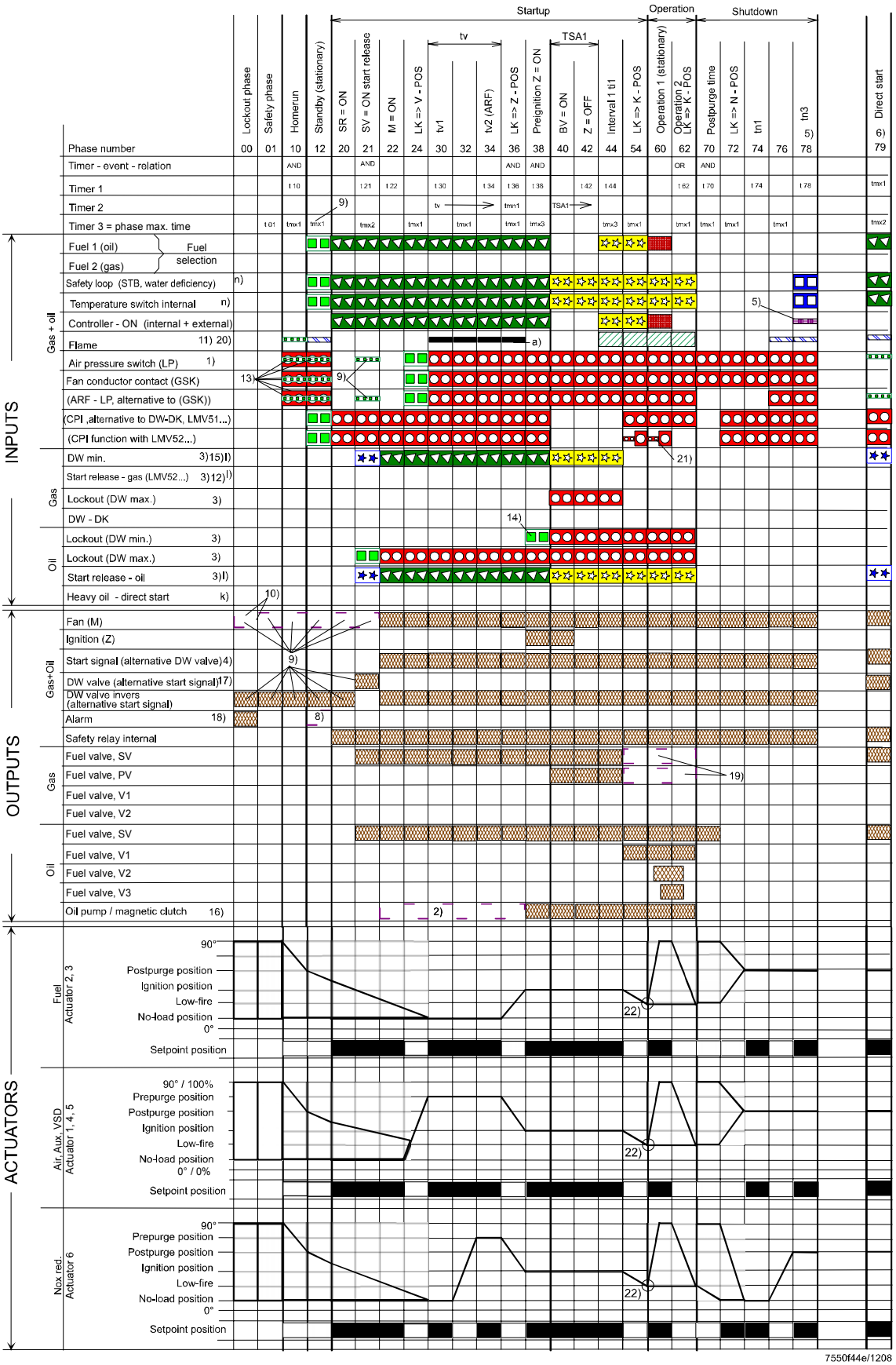

Program «Light oil with gas pilot ignition (LOgp)» (also refer to «Fuel train applications (examples)»)

Heavy oil with gas pilot ignition

HOgp

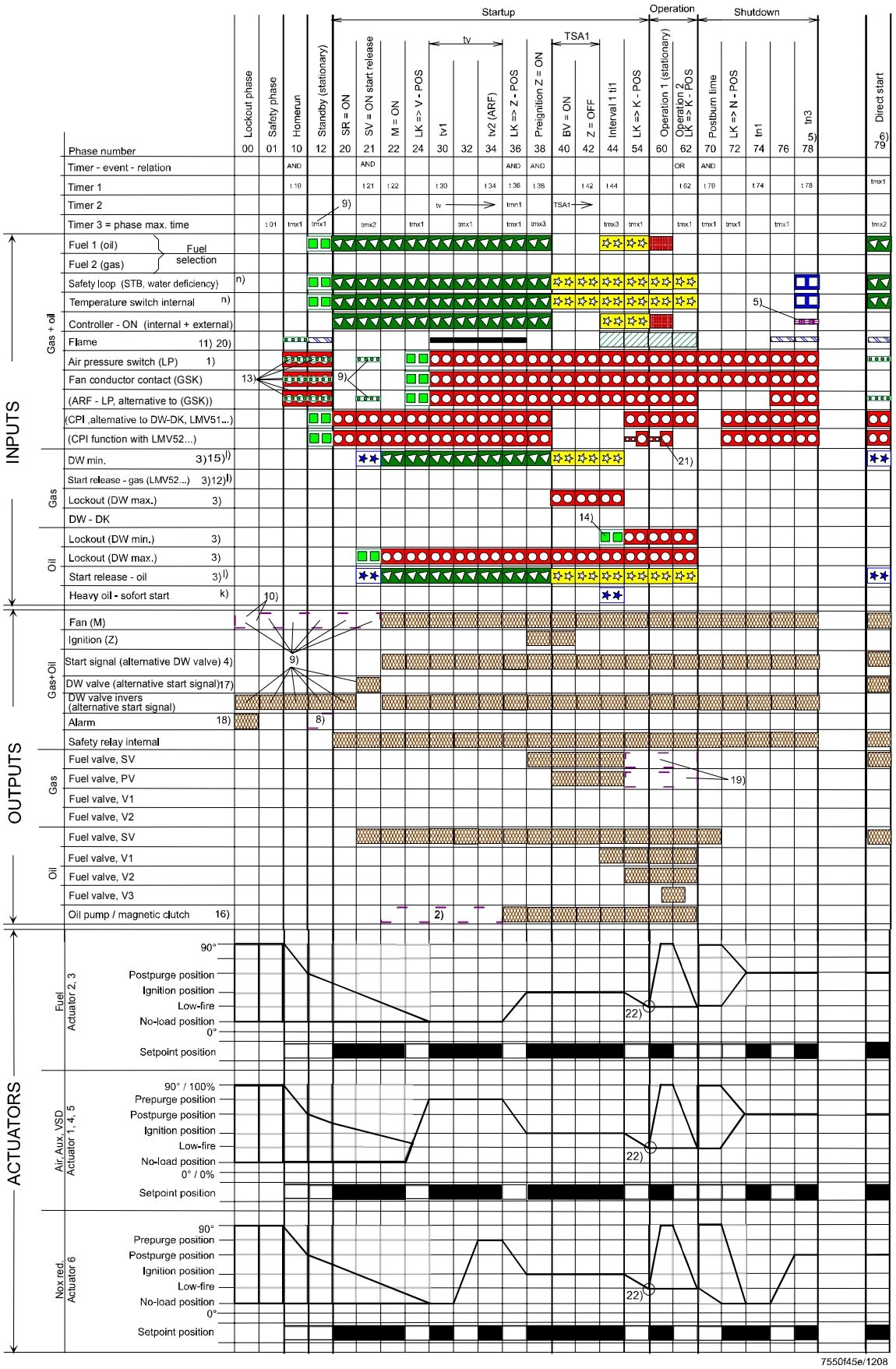

Program «Heavy oil with gas pilot ignition (HOgp)» (also refer to «Fuel train applications (examples)»)

Legend to the sequence diagrams

Depending on the parameter, valve proving takes place:
between phase 62 and phase 70 or/and
between phase 30 and phase 32

Signal ON	Signal OFF	Next phase
		01 → 00, Rep = 0 01 → 12, Rep > 0
		Parameter direct start Checking with controller on Deviation → 10 No Rep. decrement
		10
		70
		Without VP70 with VP80
		62
		Stop, up to Ph – max. time → 01
		Stop, up to Ph – max. time → 10
	0 – 3 s	01 → 00, Rep = 0 01 → 12, Rep > 0
	0 – 30 s	01 → 00, Rep = 0 01 → 12, Rep > 0
0 – 3 s		01 → 00, Rep = 0 01 → 12, Rep > 0
		Param. → 79 Param. → 10
		Input: don´t care
		Output: OFF
		Output: ON

Assignment of times:

t0	Postpurge lockout position
t01	Max. time safety phase
t10	Min. time home run
t21	Min. time start release
t22	Fan runup time
t30	Prepurge time part 1
t34	Prepurge time part 3
t36	Min. ON time oil pump
t38	Preignition time gas / oil
t42	Preignition time OFF
t44	Interval 1 gas / oil
t62	Max. time low-fire
t70	Afterburn time
t74	Postpurge time 1 gas / oil (tn1)
t78	Postpurge time 3 gas / oil (tn3)
t80	Valve proving evacuate time
t81	Leakage test time atmospheric pressure
t82	Leakage test filling test
t83	Leakage test time gas pressure
tmn1	Min. time extraneous light test (5 s) after skip over of prepurge
tmx1	Max. damper running time
tmx2	Max. time startup release
tmx3	Max. time circulation heavy oil
tn	Postpurge time
TSA1	Safety time 1
TSA2	Safety time 2
tv	Prepurge time gas / oil

Legend to the sequence diagrams (cont´d)

1) Parameter: With / without pressure switch
2) Parameter: Short / long preignition time for oil only
   Short / long oil pump – ON – time
3) Delayed shutdown within TSA1 + TSA2
4) Parameter: Output as startup signal / pressure switch relief valve
5) Parameter: Normal / direct startup
   Normal startup → sequential phase = 10
   Direct startup → sequential phase = 79
   (when R = ON)
6) Sequential phase = 24
7) Only with valve proving during startup
8) Parameter: With / without alarm on prevention of startup
9) Parameter: With continuous purging the shown output signals are inverted
10) Fan controlled as before
    Running time when LOCK OUT = T_FanLockout
11) Parameter: With / without extraneous light test in STANDBY
12) With valve proving during startup phase 10
13) Parameter: Normal / continuous purging
    Normal purging: Checking for off in 10, stop to Ph-max time → 01
    Continuous purging: Checking for on in 10 and 12, Stop up to phase-max time → 01
14) Parameter: “OilPressureMin”, “akt_from_ts“ → no check before TSA1 (LO, HO) or TSA2 (LOgp, HOgp)
15) Parameter: “GasPressureMin“, “deakt_xOGP“ → pressure switch-min can
    be deactivated for oil programs with gas pilot
16) Parameter: “OilPumpCoupling“, “direct_coupl“ → shutoff valve oil has
    to be connected to output “Oil pump / magnetic clutch“. Output is active when fan is on and for another 15 s after fan is switched off

Permissible positioning range

In Standby: actuator can travel within the permissible positioning range, but is always driven to the home position. Must be in the home position before changing the phase

0°	Position as supplied (0°)
90°	Actuator fully open (90°)
AGR	Fuel gas recirculation
CPI	Closed position indication
DP	Pressure tester
PS-VP	Pressure switch – valve proving
FCC	Fan contactor contact
LF	Air damper
APS	Air pressure switch
N	Postpurging
SR	Safety relay
SLT	Safety limit thermostat
TL	Temperature limiter

Repetition counter:

k)	Heavy oil
l)	Restricted startup behavior
n)	Restricted safety loop

17) Parameter: “Start / pressure switch valve“, “PS_Reli_Inv“→ Output pressure switch valve will be logically inverted
18) Parameter: “Alarm act / deact“, “deactivated“→ The alarm output can temporarily be deactivated (for current error only)
19) Parameter: Only with LMV52...: Continuous pilot gas / oil: Activated → Pilot valve is also activated in operation
20) Parameter: Only with LMV52...: Extraneous light, pilot phase, operating phase gas / oil → Separate flame supervision possible
21) Parameter: Only with LMV52...: pressure switch valve proving / CPI or StartReleaseGas → Parameter-dependent ON / OFF test
    CPI Gas: OFF test for gas trains only
    CPI Oil: OFF test for oil trains only
    CPI Gas+Oil: OFF test for gas and oil trains
22) Parameter: After LMV52... software version 04.50 and AZL5... software version 04.40, dependent on parameter *StartPktOperation*

5 Fuel / air ratio control (FARC)

5.1 General

The electronic fuel / air ratio control system LMV51... can control up to 4 actuators, the LMV52... up to 6 actuators. The functions of the dampers are ready assigned to the addresses and are defined as follows:

	LMV51...	LMV52...
1	Air damper	Air damper [2])
2	Fuel 1 (gas)	Fuel 1 (gas)
3	Fuel 2 (oil)	Fuel 2 (oil)
4	Auxiliary actuator 1 (mixing device) [1])	Auxiliary actuator 1 (e.g. mixing device) [2])
5		Auxiliary actuator 2 [2])
6		Auxiliary actuator 3 (e.g. flue gas recirculation) [2])
7		VSD [2])

[1]) VSD (LMV51.2... with VSD module)
[2]) Actuators used in connection with air control (can be parameterized)

Actuators 1...6 are controlled with a resolution of 0.1°. They can be adjusted between 0° and 90°. The VSD is controlled with a resolution of 0.1 %. It can be adjusted between 0 % (off, prepurge / postpurge fan speed) or 10 % (ignition and operating speeds) and 100 %.

5.1.1 Control sequence

The program phases are controlled by the burner control. They advance in tune with the fuel / air ratio control system.

Standby

In standby, the actuators are driven to their home positions. A deviation from the required position does not lead to lockout, but only to start prevention. The home position is defined for all actuators and can be adjusted differently for oil and gas.

Parameters:	LMV51...	LMV52...
HomePosAir	x	x
HomePosGas	x	x
HomePosOil	x	x
HomePosAux	x	x
Aux2		x
Aux3		x
VSD		x

Preventilation

In phase 24, the actuators used for the control of air (air actuator and auxiliary actuator) are driven to their postpurge positions. If the actuator does not reach the required position within the maximum time, safety shutdown will take place → position check. The prepurge time starts only when the actuators have reached their prepurge positions. The prepurge position is only defined for the actuators used for the control of air and can be parameterized depending on the type of fuel. The fuel actuators maintain their home positions.

Parameters:	LMV51...	LMV52...
PrepurgePosAir	x	x
PrepurgePosAux	x	x
Aux2		x
Aux3		x
VSD		x

Ignition

In phase 36, all actuators are driven to their ignition positions. For that purpose - like in prepurging - a maximum time is available within which the ignition position must be reached → position check.
Ignition takes place only when the required position is reached. The ignition position can be adjusted for all actuators, depending on the type of fuel.

Parameters:	LMV51...	LMV52...
IgnitionPosAir	x	x
IgnitionPosGas	x	x
IgnitionPosOil	x	x
IgnitionPosAux	x	x
Aux2		x
Aux3		x
VSD		x

Traveling to the operating position

When ignition has taken place and the flame has stabilized, the actuators must be brought into line. For that purpose, the control unit drives the actuators to their basic part load position (low-fire) as defined by the curves.
The actuators which, for ignition, have assumed a special position, travel at individually calculated speeds to ensure that all of them will reach the part load position at the same time.

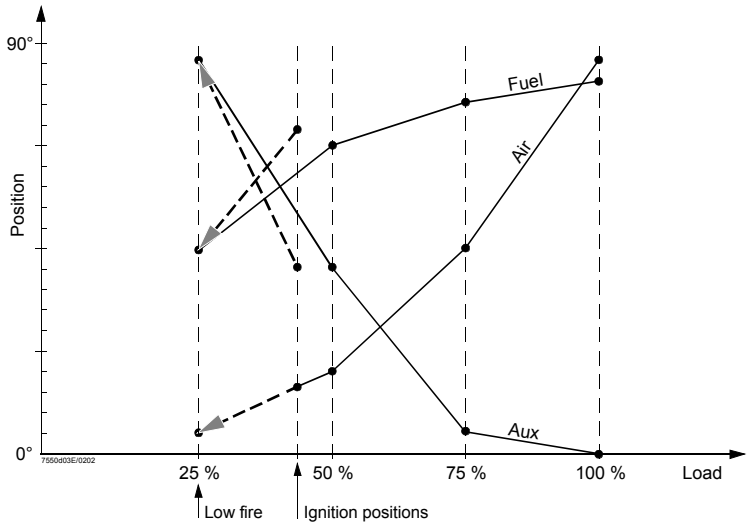

Traveling to the low-fire position after ignition

Note: The system also allows ignition positions outside the defined range of fuel / air ratio control, that is, not between nominal load and low-fire.

Operation

In the operating position, the dampers are adjusted according to demand. The fuel / air ratio curves are defined for gas and oil.
For modulating operation, the output can be adjusted in increments of 0.1°.
The actuators travel to the defined ratio curves.
In multistage operation, 2 or 3 load points can be approached.
For more detailed information, *refer to section «Operating position».*

End of operating position

After there is no more demand from the controller, the fuel / air ratio control system first changes to low-fire (phase 62) before the fuel valve close. For that purpose, a maximum time is available which can be parameterized → part load shutdown.

Postpurging

When the burner is shut down, the actuators will be driven to their postpurge positions in phase 72.
For that purpose, a maximum time is available → position check.
The postpurge position is defined for all actuators and can be adjusted depending on the type of fuel.

Parameters:	LMV51...	LMV52...
PostpurgePosAir	x	x
PostpurgePosGas	x	x
PostpurgePosOil	x	x
PostpurgePosAux	x	x
Aux2		x
Aux3		x
VSD		x

Actuator speed outside normal operation

The actuators' speed when traveling to the home, prepurge, ignition and postpurge positions can be parameterized.

Outside normal operation, all actuators travel at that speed.

Note

When parameterizing the operating ramp, the speed of the **slowest** actuator must be taken into consideration!

Parameter	*TmeNoFlame*

Operating position
Modulating

Modulating operation is possible for both types of fuel, gas and oil.
In the operating position, the dampers are driven to the defined fuel / air ratio curves in accordance with the required output. Up to 15 curvepoints can be defined. The spacing of the points (difference in output) can be freely selected.
The positions of the curvepoints are calculated by making linear interpolations.
To ensure correct fuel / air ratio control at any time, the actuators travel in steps of maximum 1.2 seconds. This traveling time corresponds to a positioning angle of 3.6° at an operating ramp of 30 seconds / 90 °.
For each of these steps, an individual speed is calculated for each actuator, so that all actuators reach the required positions at the same time.
The → position check is always made between the individual steps when the actuators do not move.
The speed of the fastest actuator can be parameterized.
If there is a curvepoint on the way to the next target on the curve, it will always be approached.

Note

When parameterizing the operating ramp, the speed of the **slowest** actuator must be taken into consideration!

Parameter	*OperatRampMod*

Multistage operation

Multistage operation is only possible when firing on oil. It is possible to parameterize if multistage or modulating operation is used.
Electronic fuel / air ratio control can be configured for both 2-stage and 3-stage burners. In this operating mode, the oil actuator is not controlled.

Multistage fuel / air ratio control is defined via different load points. These are the stationary operating points and separately adjustable switch-on / off points.

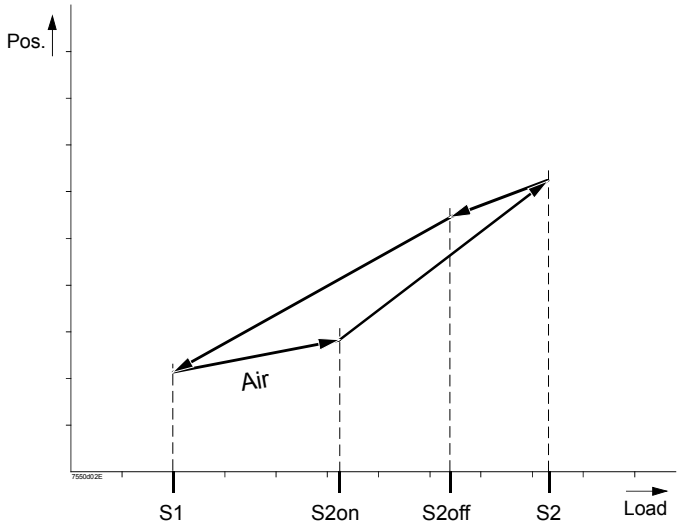

Multistage operation (here: 2-stage)

Between these points, the actuators are adjusted during their continuous travel. The speeds of the individual actuators will be calculated such that they reach their targets at the same time.

Note

When parameterizing the multistage operating ramp, the speed of the **slowest** actuator must be taken into consideration!
When changing from stage 1 to stage 2, first «switch-on point S2» is approached, starting from «operating point S1». Now, the second fuel valve is opened.
Then, the system travels to «operating point S2».
If the output shall be cut back to stage 1, first «switch-off point S2» will be approached.
If «switch-off point S2» has not yet been set, «switch-on point S2» will be approached and the fuel valve closed.
Then, the fuel / air ratio position of «operating point S1» will be approached again.
The procedure is analogous when switching from stage 2 to stage 3 and back again.

Parameter	*Operation Mode (Two-stage / Three-stage / Modulating)*
	SetPointStage1 (stage 1)
	StartPointStage2
	OffPointStage2
	SetPointStage2 (stage 2)
	StartPointStage3
	OffPointStage3
	SetPointStage3 (stage 3)
	Betr_Rampe_Stuf

5.1.2 Position check

Dynamic safety time fuel / air ratio control

Definition of «Safety time fuel / air ratio control»:

- «Safety time fuel / air ratio control» is the period of time during which deviations from the required position of one or several actuating devices are tolerated before the valves are shut down
- In contrast to the burner control's safety time, this safety time need not be fixed since the risk potential of a fuel / air ratio control system increases in proportion to its deviation from the required state

All safety-related supervision functions of the fuel / air ratio control system, especially checking of the actuator positions with regard to the required positions, are based on this «Safety time fuel / air ratio control».
The «Safety time fuel / air ratio control» of 3 seconds considers the worst case. This describes the situation where the deviations from the actuators' required positions are such that loss of flame does just not yet occur, that is, the combustion process is as poor as it can possibly be.
In such a case, it is assumed that the amount of unburned or partly burnt gases produced within 3 seconds is not sufficient to cause deflagrations or explosions within the «Safety time fuel / air ratio control» or just after that time (that is, after the valves are shut down).
As mentioned above, it should also be considered that the smaller the deviation from the required state, the smaller the proportion of unburned gases. This means that the closer the required positions, the smaller the risk of dangerous conditions.
For this reason and for reasons of availability, the LMV5... uses a «Dynamic safety time fuel / air ratio control».
This safety time is accomplished as follows:

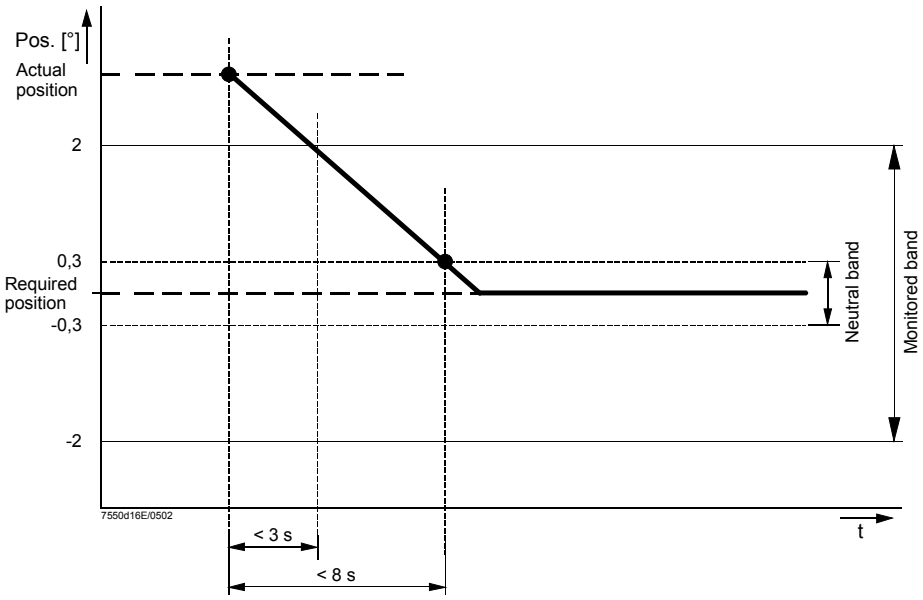

Successful change of position

In the case of a change of position, the current actuator position must have approached the required position to within 2° in no more than 3 seconds.
Otherwise, safety shutdown occurs.
Also, the neutral band must be reached within 8 seconds after starting the change in position.

If, due to external effects, an actuator moves from its required position by more than ± 0.3° (neutral band) for more than 8 seconds, the supply of fuel will be shut down.

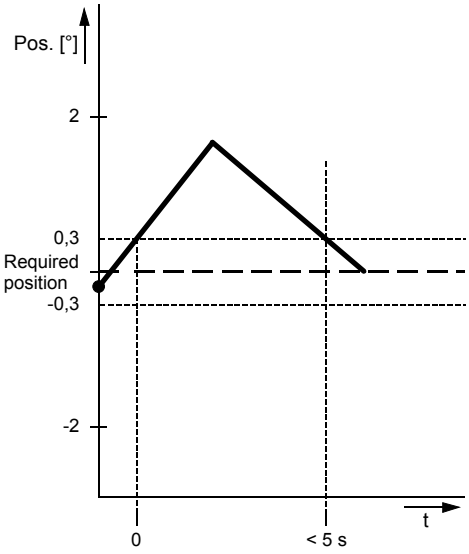

Successful correction < 2°

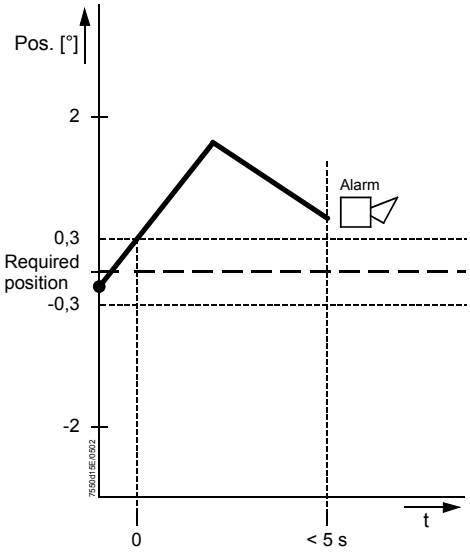

Fault < 2° (Stall point at constant output)

The required position is considered to be reached when it is within ± 0.3°.
When reaching a new position within ± 0.3°, the fuel / air ratio control system makes a fine adjustment on the actuators.
Readjustments of the position are made only if the current position deviates from the required position by more than 0.3°, followed by another fine adjustment.
If, during the load change, an actuator is mechanically blocked, the supply of fuel will be shut down within 3 or 8 seconds.

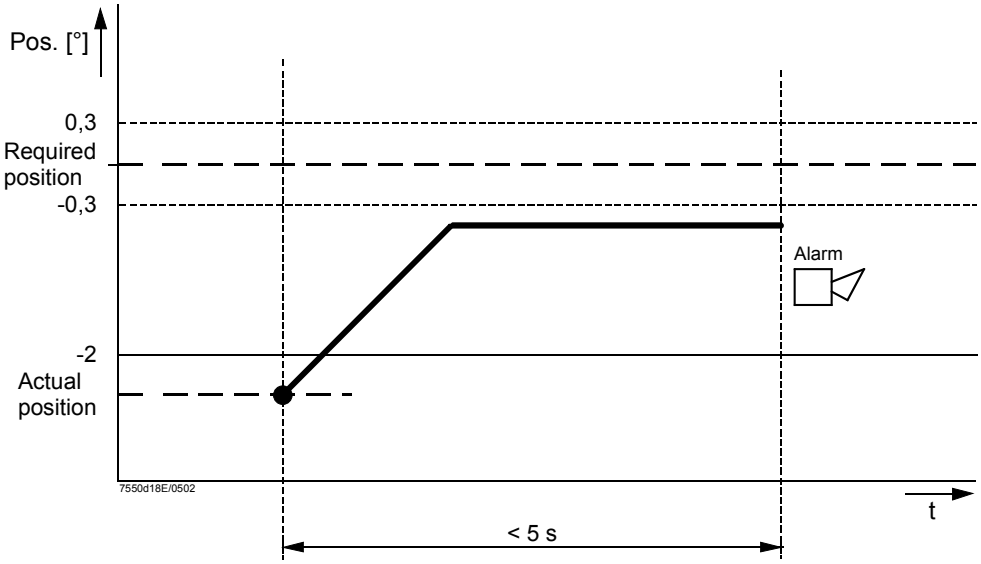

Locking on change of load (approach < 2° > 0.3°)

Outside the operating position

In the phases where the actuators are driven to one of the special positions (home, prepurge, ignition or postpurge position), there is no continuous position check. To make possible the change to the next phase, the required position must be reached. To travel to the required position, the maximum time available is 35 seconds or 20 % longer than *TmeNoFlame* parameterized. If the required position is not reached within this maximum period of time, safety shutdown will be initiated → actuator overload protection. In the phases where the damper does not move, the position is continuously checked. If there are deviations from the required position, adjustment attempts are made where the → «Dynamic safety time fuel / air ratio control» is used.

Operating position modulating

The position check back signal delivered by the actuators is evaluated only when the actuators do not travel, thus making possible precise position measurements.
To ensure that the actuators are not out of control of the basic unit for longer periods of time, longer movements are subdivided into traveling steps of 1.2 seconds. After each step, the required position must be reached. The required position is considered to be reached when the actuator has traveled to a band width of ± 0.3°.
If the actual position does not agree with the required position, readjustments will be made, whereby the → dynamic safety time of the fuel / air ratio control system will be applied.

Operating position multistage

In multistage operation, the actuators are monitored at stationary points. The actuators must reach these points within the calculated period of time, whereby the → dynamic safety time of the fuel / air ratio control system will be applied.
Additional position checks are made during the actuators‘ travel, in order to find out if the actuators do not move, or if they travel in the wrong direction.

5.1.3 Special features

Program stop

To facilitate burner startup, startup and shutdown can be stopped in several phases.
If a program stop is active, the special positions (prepurge, ignition and postpurge position) can be set in the respective phase.
If a program stop has been activated, it remains active until manual deactivation takes place (even after power-OFF).

Parameter	*ProgramStop (deactivated / 24 PrePurgP / 32 PreP FGR / 36 IgnitPos / 44 Interv 1 / 52 Interv 2 / 72 PostPPos / 76 PostPFGR)*

Direction of rotation of actuators

The actuators‘ direction of rotation can be reversed, so that the direction of rotation can be matched to the mounting. method. The direction of rotation must be selected before defining the ignition position and the curvepoints. If that is not observed, these points must be deleted before the direction of rotation is reversed. For that purpose, a special function called «Delete curves» is offered on the menu for selecting the direction of rotation.

Parameters:	**LMV51...**	**LMV52...**
1 AirActuator (standard / inverted)	x	x
2 *GasActuator (oil) (standard / inverted)*	x	x
3 *OilActuator (standard / inverted)*	x	x
4 *AuxActuator (standard / inverted)*	x	x
5 AuxActuator 2		x
6 AuxActuator 3		x

Limitation of the load range

The curves are defined by the 2 limits «Low-fire» (part load) and «Nominal load» (maximum load).
In certain cases, it has proven practical to limit the burner's output, either temporarily or permanently.
This limitation of the burner's working range can make sense in both directions. The burner's working range then looks as follows:

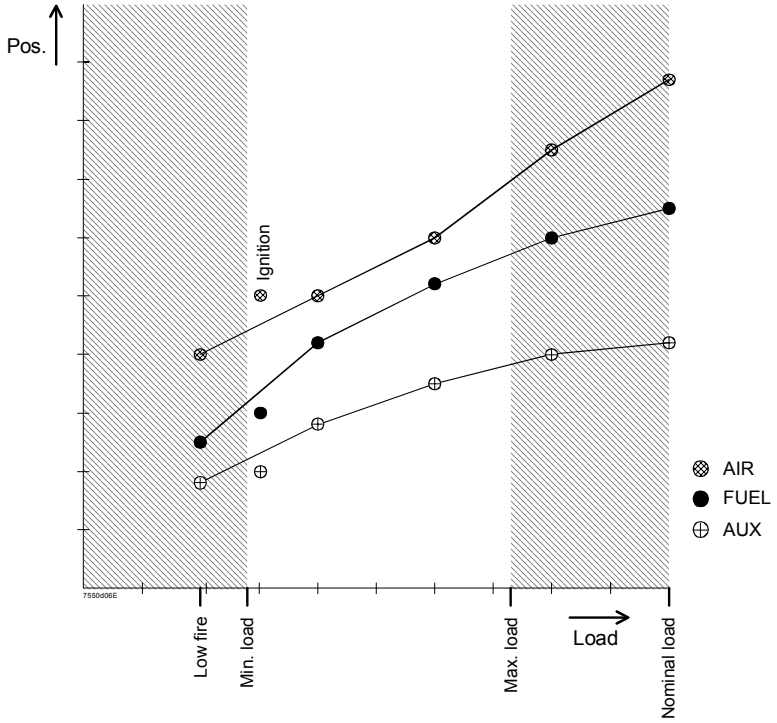

Limited working range

The usable load range always lies within the defined curves. This means that if the minimum load is smaller than the low-fire load, loads below the low-fire load will be disregarded. And if the maximum load is greater than the nominal load, loads above the nominal load will be disregarded.
If the minimum load is greater than or equal to the low-fire load, the minimum load assumes the role of the low-fire load, that is, after ignition, the minimum load will be considered.
The 2 parameters «Minimum load» and «Maximum load» can be set depending on the type of fuel burnt, whereby:

Low-fire load ≤ minimum load ≤ maximum load ≤ nominal load

Parameter	*MinLoadGas*
	MaxLoadGas
	MinLoadOil
	MaxLoadOil

The plant operator can confine the load range further:

Parameter	*UserMaxLoadMod*
	UserMaxLoadStg

Here, the plant operator can further confine the maximum output to be delivered. There is a limit parameter for modulating operation and a limit parameter for multistage operation.

Hiding a load range

Here, it is possible to set a load range that is not constantly approached.

Example: *LoadMaskLowLImit* 45 %
LoadMaskHighLimit 53 %

The system travels to a load of 45 % from below and waits there until the preset load of 53 % is reached or exceeded. Then, using the operating ramp, it travels to 53 % and beyond. In case the load changes from a higher to a lower level, the system waits at 53 %. When the preset load reaches 45 % or drops below that level, the hidden range will be overridden.

Parameter	*LoadMaskLowLImit*
	LoadMaskHighLimit

Activation of actuators / VSD

Parameters:	**LMV51...**	**LMV52...**
AuxActuator (deactivated / damper act / VSD activat)	x	
AirActuator (deactivated / activated) (air influen)		x
AuxActuator 1 (deactivated / activated) (air influen)		x
AuxActuator 2 (deactivated / activated) (air influen)		x
AuxActuator 3 (deactivated / activated) (air influen)		x
VSD (deactivated / activated)(air influen)		x
FuelActuator (deactivated / activated)		x

LMV51...

If the auxiliary actuator is not required, it must be deactivated. This can be selected separately for both types of fuel. Here, with the LMV51.2..., the VSD will be activated.

LMV52...

The required actuators must be activated. If O2 trim control is used, the actuators having an impact on the air volume must be parameterized to «air influen».

Number of fuel actuators

The standard LMV5... system uses 1 fuel actuator for gas and 1 fuel actuator for oil. But it is also possible to use one common actuator for the fuel damper and the oil pressure controller.
However, it is still possible to parameterize independent curves for both types of fuel.

Note

If the above mentioned parameter was set to «1», the common fuel actuator must be addressed as a «gas actuator».

Parameter	*NumFuelActuators (1 / 2)*

Traveling times

The traveling speed of the actuators can be adjusted for the different burner statuses. The time to be parameterized is the period of time the actuator requires to cover an angular rotation of 90°.
Traveling speed in the phases with no flame (e.g. traveling to prepurge):

Parameter	*TmeNoFlame*

Traveling speed in the operating position in modulating operation:

Parameter	*OperatRampMod*

Traveling speed in the operating position in multistage operation:

Parameter	*OperatRampStage*

When parameterizing the speeds, the running times of the connected actuators must be taken into consideration.

Shutdown behavior

The positions the actuators assume in the event of lockout can be adjusted. To facilitate fault diagnostics, the actuators can be stopped at their last position or can be driven to their home or postpurge position.

Parameter	*ShutdownBehav (Unchanged / PostpurgeP / HomePos)*

Overload protection of actuators

If the actuators block, lockout will be enforced.
However, if the actuators cannot reach the positions required by lockout, they would be damaged due to overtemperatures.
To prevent this, the actuators will be deactivated after a maximum time of 35 seconds, or at 20 % above the value for *TmeNoFlame* parameterized.

Curve adjustment

Refer to chapter «Displays and settings» / special function curve adjustment fuel / air ratio control.

6 Temperature or pressure controller (internal load controller LC)

6.1 General

The internal «load controller» is provided as an option to the LMV51... and is a standard component of the LMV52...
This is a digital PID controller for the control of temperature or pressure, featuring self-setting or manual setting of the control parameters.
On fuel changeover, the control characteristics for modulating or multistage burners are automatically adapted if required.

Note

For operation and parameterization, *refer to chapter Display and Operating Unit «AZL5…»*

6.2 Connection diagram

LR - connections

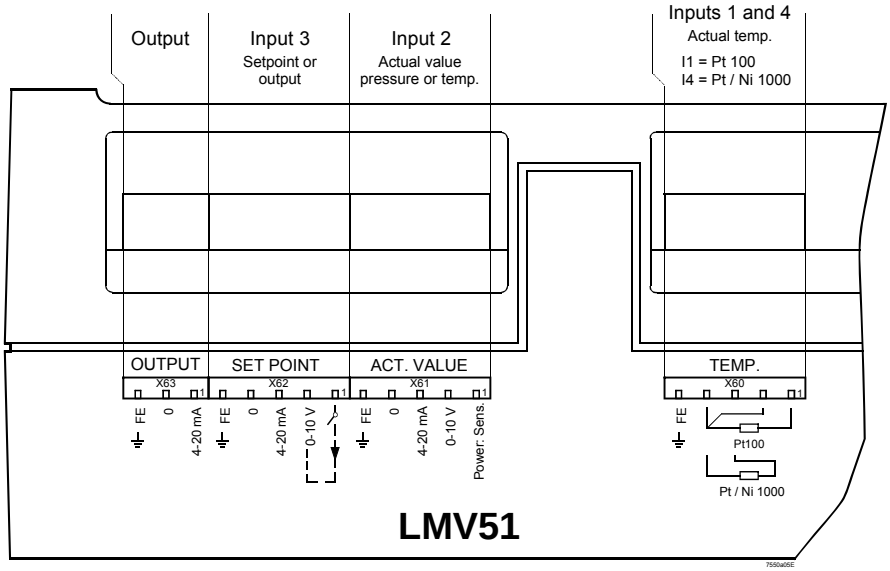

6.3 Operating modes with the load controller

For the connection of a load controller, the LMV5... can be operated in different configurations. In that case, the internal load controller, different external load controllers, or a load controller via a BACS can be used.
To ensure all involved bus users (basic unit, load controller, AZL5…) are correctly configured, the global parameter «LC_OptgMode» will be defined.
This parameter is set on the AZL5… when selecting the operating mode and is delivered to all bus users involved. Then, each bus user makes the configurations required for the relevant operating modes.

Parameter	*LC_OptgMode (ExtLC X5-03/Int LC/Int LC Bus/Int LC X62/Ext LC X62/Ext LC Bus)*

Operating mode 1 (ExtLC X5-03)

External load controller.

In this operating mode, an external load controller (e.g. RWF40...) is used. The internal control algorithm is not active.
The internal temperature limiter function can be activated.
The external load controller must have 3 contact outputs which - as shown below - must be connected to the LMV5... basic unit.

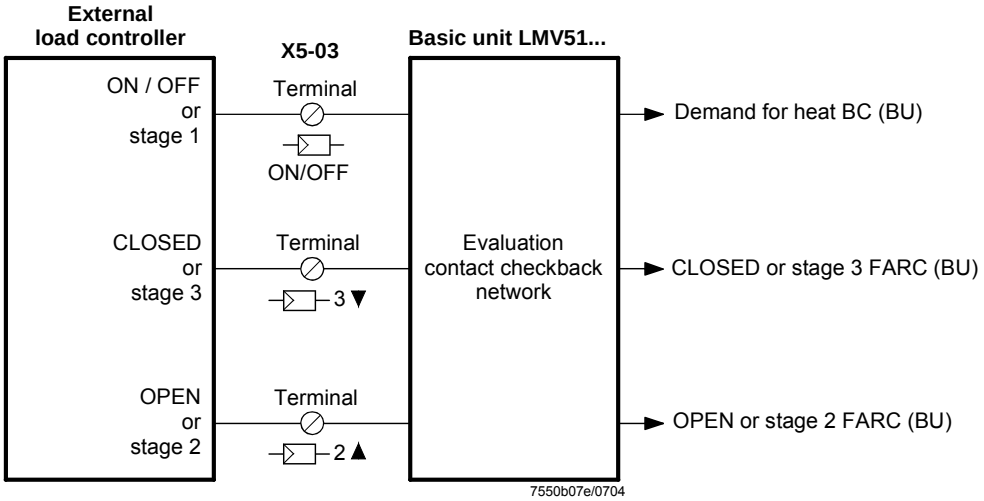

Special case: **BACS** as control via a contact

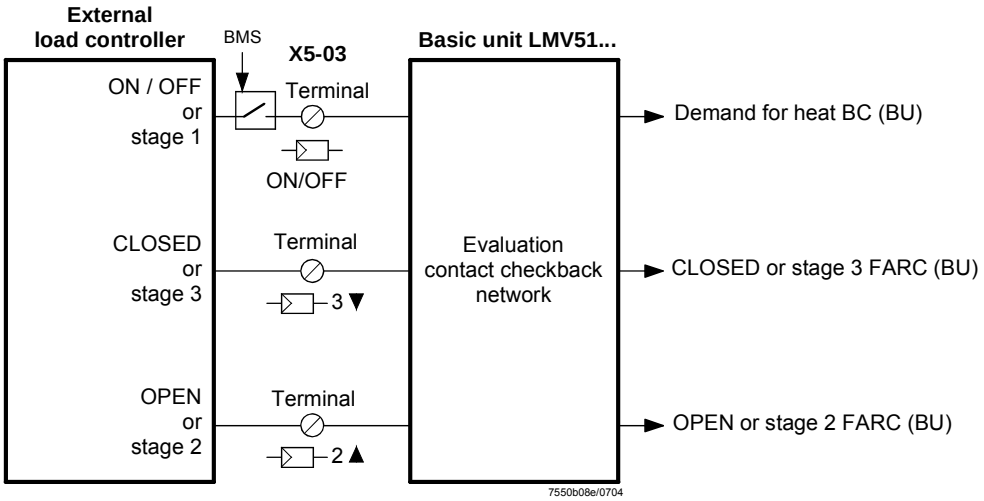

Operating mode 2 (intLC)

Internal load controller

In this operating mode, the load controller inside the LMV5... is used (standard application). The manipulated variable and the demand for heat are internally generated and handled.
Terminals X62.1 and X62.2 can be used to make an external changeover between the internal setpoints W1 and W2.

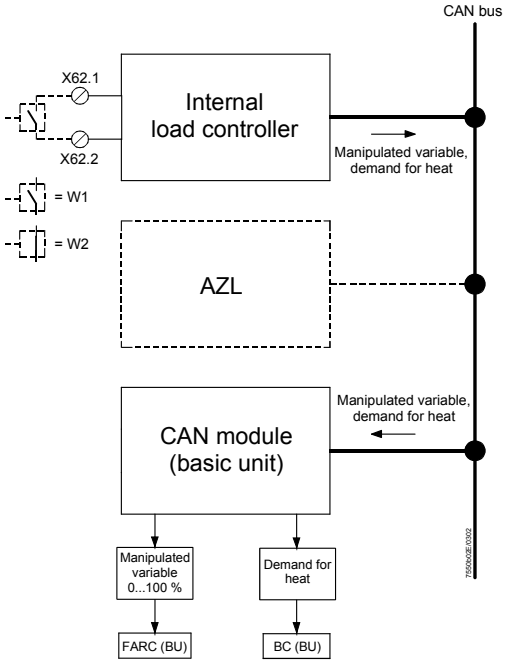

Operating mode 3 (int LC bus)

BACS as control via bus with the internal load controller.
The internal load controller is connected via the AZL5… and an external bus interface (Modbus) with a BACS. The BACS transmits “only“ predefined setpoints to the internal controller. This means that the actual control is provided by the internal load controller. Terminals X62.1 and X62.2 can be used for changeover from the external predefined setpoint to the internal setpoint W1 (e.g. in the event the BACS fails), triggered via a potential-free contact (load controller software version V01.40 or higher).

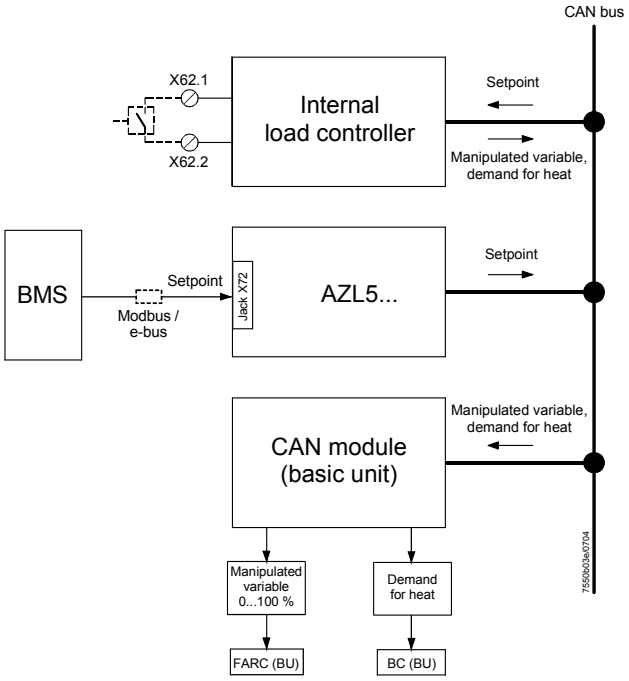

Operating mode 4 (int LC X62)

BACS as control via analog input with the internal load controller.
In principle, identical to operating mode 3, except that the BACS delivers the predefined setpoint via analog input 3 (SET POINT INPUT).
Terminals X62.1 and X62.2 can be used to make a changeover from externally (e.g. in the event the BACS fails) from the external predefined setpoints to the internal setpoint W1, using a potential-free contact (load controller software version V01.40 or higher).
With a predefined setpoint via DC 0...10 V signal, voltage – in the case of changeover to the internal setpoint «W1» – must be separated from input X62.2.

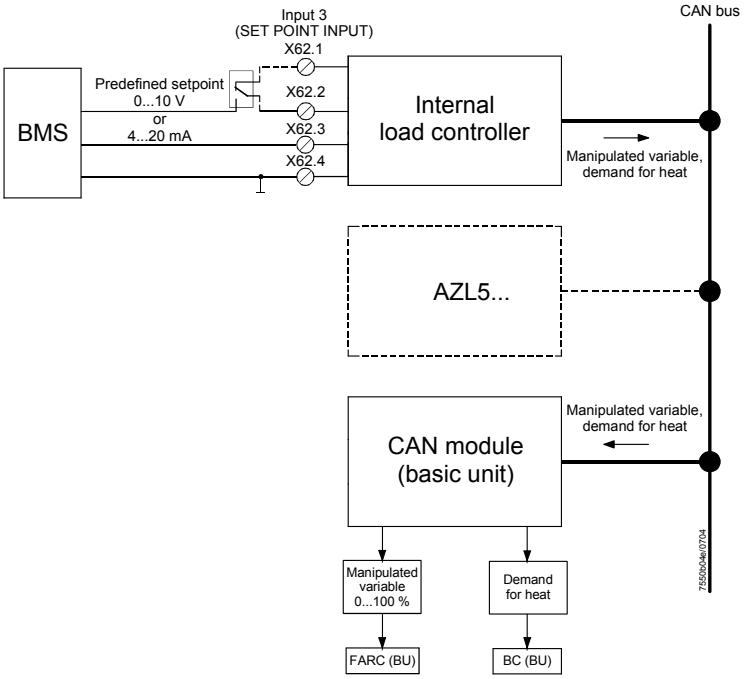

Operating mode 5 (Ext LC X62)

The internal load controller is used for translating the analog load signal to the CAN bus protocol. The internal control algorithm is not active. BACS as control (or external controller) with analog predefined manipulated variable (load signal) to the controller inside the LMV5...

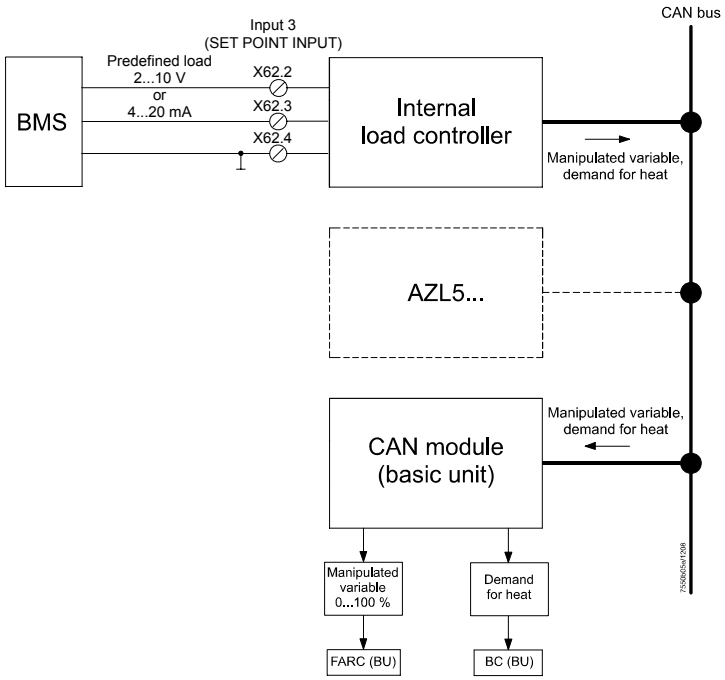

Operating mode 6 (Ext LC bus)

BACS as control with digital predefined load via bus.
The LMV5... system is connected to a BACS via the AZL5… and an external bus interface (e.g. Modbus).
The BACS contains the controller and transmits the load (manipulated variable) and the heat demand signal to the LMV5... system.
In this operating mode, the load controller inside the LMV5... is not required.

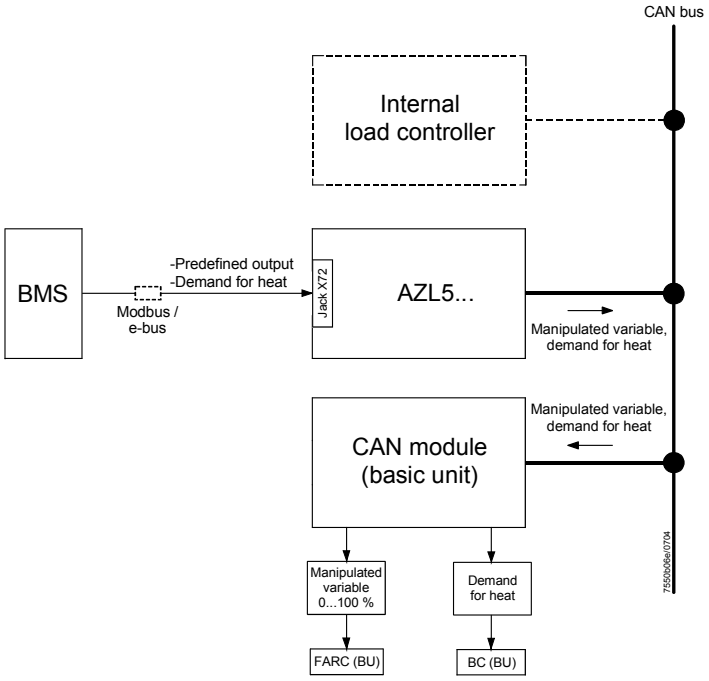

6.3.1 Operating mode changeover to internal load controller

To improve availability, a potential-free contact at inputs X62.1/ X62.2 can be used to switch from any of the other operating modes to the internal load controller. In that case, setpoint W1 applies. For the selected external operating mode, the switch connected to X62.1 / X62.2 is open. For switching over to the internal load controller, the switch will be closed.

Note:
When switching to operating mode 2 by means of an external contact, parameter «LC_OptgMode» set by the AZL5... will not be switched over. If one of the external operating modes was selected with the AZL5..., the internal LC parameter will no longer be offered for making settings. For this reason, to set the internal LC, parameter «LC_OptgMode» must first be set to «IntLC». Then, the LC operating mode must be set to the desired external operating mode.

To ensure that controller input X5-03 will not be valued when changing to operating mode 1 (ExtLC X5-03), the «on / off» controller input at (ExtLC X5-03 Pin 1) should be deactivated. In operating mode 1 (ExtLC X5-03), the input is nevertheless active. Then, when changing to the internal load controller, the «on / off» controller input is deactivated.

Parameter	*Input Controller (activated / deactivated)*

6.4 Control (characteristics)

Operating mode

The load controller can work in 2 different operating modes:
- Modulating, or
- Multistage

With electronic fuel / air ratio control, modulating or multistage mode must be selected, depending on the type of burner.

Parameter	*Operation Mode (Two-stage / Three-stage / Modulating)*

6.4.1 Integrated 2-position controller (C = ON / OFF)

General

The integrated 2-position controller transmits to the burner control section the internal information «Heat demand controller» (C = ON / OFF).

Switching differentials

Modulating mode:
C = ON when: Actual value ≤ (setpoint ± SD_ModOn)
C = OFF when: Actual value > (setpoint + SD_ModOff)

Multistage mode:
C = ON when: Actual value ≤ (setpoint ± SD_Stage1On)
C = OFF when: Actual value > (setpoint + SD_Stage1Off) or
C = OFF when: Actual value > (setpoint + SD_Stage3Off) = low-fire; always applies if none of the 2 thresholds Q2 or Q3 has been exceeded

Note: When «SD_*_On» is positive, the switching differential lies above the setpoint. When«SD_*_On» is negative, the switching differential lies below the setpoint (load controller software version V01.40 or higher).

Parameter	*SD_ModOn*
	SD_ModOff
	SD_Stage1On
	SD_Stage1Off
	SD_Stage2Off
	SD_Stage3Off

6.4.2 Modulating control

General

When selecting «Gas», the LMV5... will automatically operate in modulating mode. For that reason, no parameterization is required when firing on gas.
When selecting «Oil», the operating mode is to be set to «Modulating» - if required - using parameter «Operation Mode» of the electronic fuel / air ratio control system.
In this operating mode, the load controller calculates the manipulated variable by means of a PID algorithm, depending on the control differential.

Function diagrams

Example 1: The load is so small that the controller must switch to ON / OFF mode.

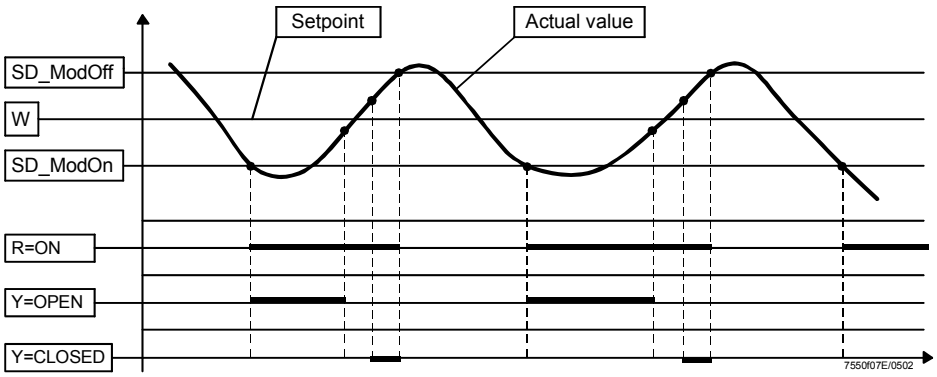

Example 2: The load is greater than the amount of heat produced by the burner under part load conditions, thus enabling correct modulating operation.

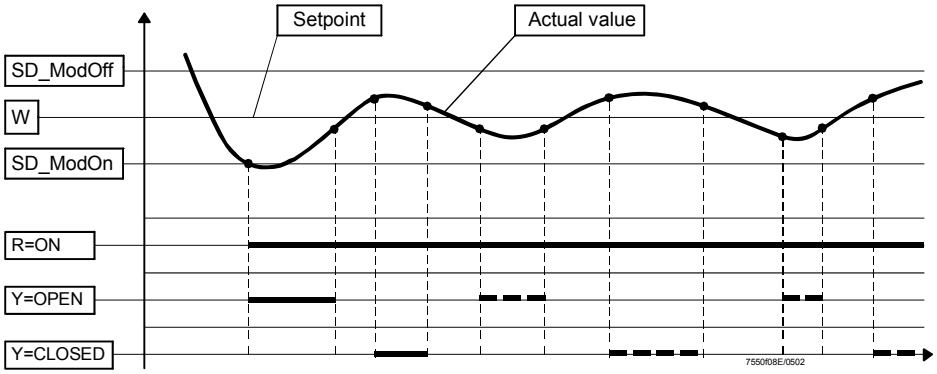

Control parameters

Manual setting of the control parameters

Parameters:
Proportional band: *P-Part (Xp) (2...500 %)* of the parameterized measurement range
Integral action time: *I-Part (Tn) (0...2000 s)* 0 = no I-part
Derivative action time: *D-Part (Tv) (0...1000 s)* 0 = no D-part

The PID parameters can be manually set to any value of the above setting ranges, or a triple value from the standard values described below can be activated (and further edited it required).

Standard values:
The controller's memory contains 5 standard parameter sets.
If required, one of these 5 PID triple values can be copied to the storage locations for the actual values so that it becomes active.

PID standard values for the following applications:

Parameter	*Standardparam (very fast / fast / normal / slow / very slow)*

Self-setting of control parameters (adaption)

The load controller integrated in the LMV5... is capable of identifying the controlled system, of calculating its PID parameters based on the acquired characteristic data and of resetting the parameters. In modulating mode, the adaption function is available for both temperature and pressure control. In multistage mode, the PID controller is active, so that no adaption can be made there.

Preconditions for adaption to be started:

- Boiler / combustion plant has fully reached the operating temperature
- Actual value lies 10…20 % below the setpoint

Adaption can be activated in a number of ways:

1. Adaption from manual operation
   a) Adaption from shutdown or standby «Burner OFF»
   b) Adaption from startup or operation «Burner ON»
2. Adaption from automatic operation
   a) Start of adaption from shutdown or standby
   b) Start of adaption from startup or operation

During adaption of the load controller, O2 trim control must not be active, since this can considerably distort the PID parameters ascertained!

If adaption is not successful due to high burner output, the adaption load can be reduced.

Parameter	*StartAdaption*
	AdaptionLoad

Adaption sequence

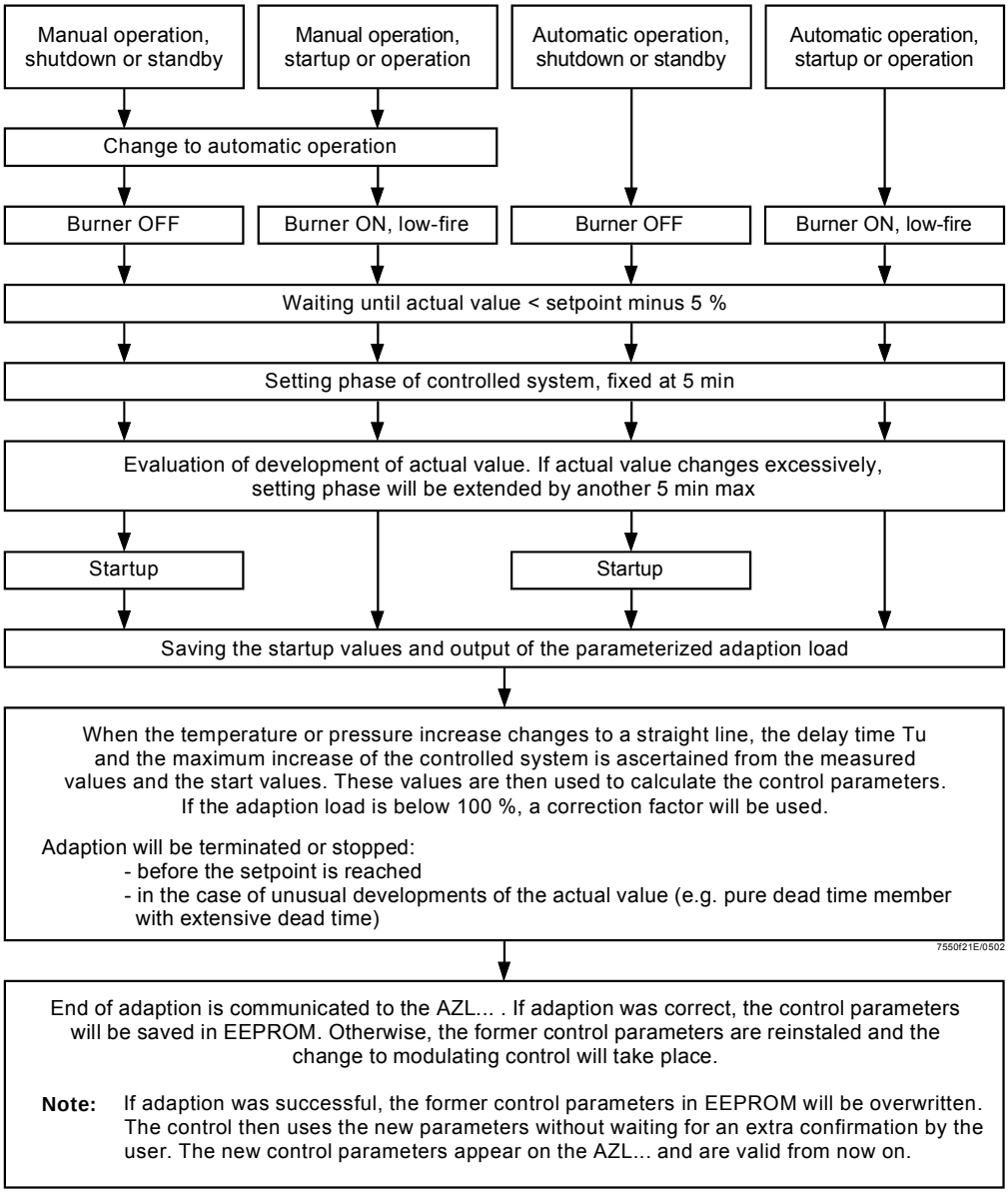

Note *Refer to chapter «Displays and settings» / special function adaption load controller*

Checking the control parameters

Optimum adaption of the controllers to the controlled system can be checked by recording the actual value during startup while the controlled system is working. The diagrams below reveal incorrect settings and give hints on remedy.

Example

Here, the behavior of a controlled system of the 3rd order for a PID controller is shown. The procedure for setting the control parameters can also be applied to other types of controlled systems.
Practical value for «Tn : Tv» = 4...6.

XP too small

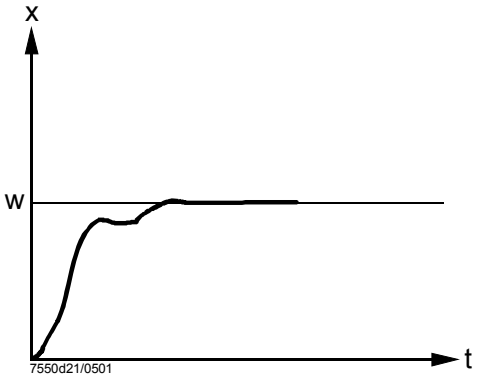

XP too great

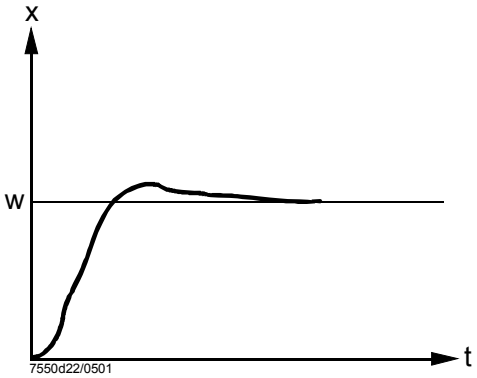

Tn and Tv too small

Tn and Tv too great

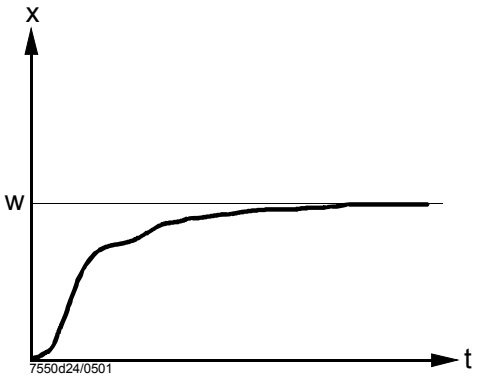

Optimum setting

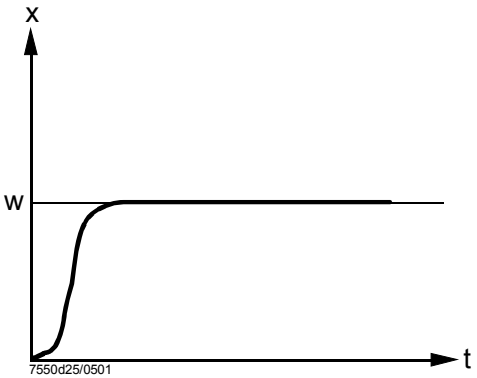

Settling of the manipulated variable

Settling of the manipulated variable is used in modulating mode to avoid unnecessary drive pulses, thus extending the life of the controlling elements.
Settling of the manipulated variable is active across the entire working range so that a neutral zone is no longer required.

Principle

For setting the settling of the manipulated variable, a parameter is used that can be set by the user, it is called «Minimum possible step of the controlling element».

Calculation of the «currently smallest possible step of the controlling element» (ASmincur) is made differently for the 2 ranges:

<u>For temperature plants:</u>

a) Control differential smaller than 0.6

SGS min akt = (0.6 – Ixdl) I 4.0 + SGS min

b) Control differential greater than / equal to 0.6

SGS min akt = (/xd/ – 0.6 I 1.2 + SGS min

<u>For pressure plants:</u>

c) Control differential smaller than 0.6

SGS min akt = (0.6 - /xd/) I 40.0 + SGS min

d) Control differential greater than / equal to 0.6

SGS min akt = (/xd/ – 0.6) I 12.0 + SGS min

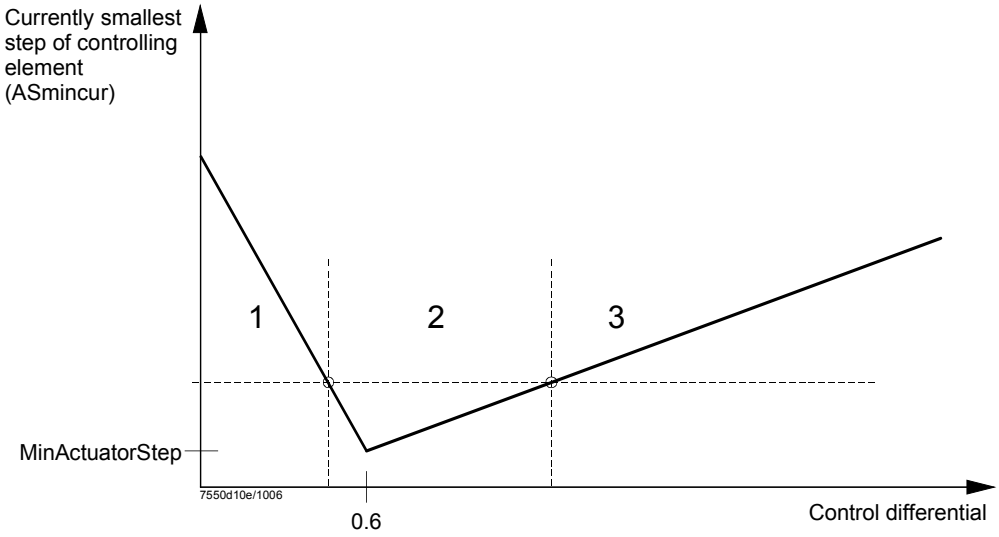

Parameter	*MinActuatorStep: (0.5…10 %)*

Description (graph)

Settling of the manipulated variable is based on the following considerations:

Sector 1
- Actual value very close to the setpoint
- Range of a small number of large steps of the controlling element

In this range, the setpoint can be maintained with a small number of steps of the controlling element. If required, large changes of the controlling element are possible - in contrast to the classical neutral band.

Sector 2
- Actual value near the setpoint
- Range of a large number of small steps of the controlling element

In this range, to ensure control, the smallest steps of the controlling element are possible.

Sector 3
- Actual value far away from the setpoint
- Range of a small number of large steps of the controlling element

In this range, small steps of the controlling element are suppressed since they would not yet have any major impact.

6.4.3 Multistage control

General

When selecting «Oil» as a fuel, the LMV5... must be set to «2-stage» or «3-stage», depending on the type of burner used, using parameter «Operation Mode» *(refer to section Control characteristic)*.
In these 2 operating modes, the PID algorithm is not required and will not be calculated. The 2 or 3 fuel stages are activated and deactivated depending on the actual values, the parameterized switching differentials_Stage1...3 *(refer to subsection Integrated 2-pointcontroller (R = ON / OFF)*) and the parameterized reaction thresholds Q2 and Q3.

Load-dependent activation of the higher burner stages

This approach is used to reduce the switching frequency of the higher stages.
- The integral of the control deviation over time is generated
- Switching on of stage 2 will be locked until the temperature has dropped below the adjustable reaction threshold Q2
- Switching on of stage 3 will be locked until the temperature has dropped below the adjustable reaction threshold Q3

If the temperature often drops below the switching on thresholds, the integrals will be added up and the higher stage switched on when the associated Q-value is reached. If, before that, the setpoint is reached with the lower stage, the counter will be reset.

Parameter	*ThreshStage2On (Q2), ThreshStage3On (Q3)*

Reaction thresholds Q2 and Q3 (integral of control deviation (K) x time (s))

Function diagrams

Example 1: Reaction thresholds Q2 and Q3 for switching on stages 2 and 3 are not reached. In that case, stage 1 will already be switched off when threshold W+SD_Stage3Off is reached (low-fire operation).

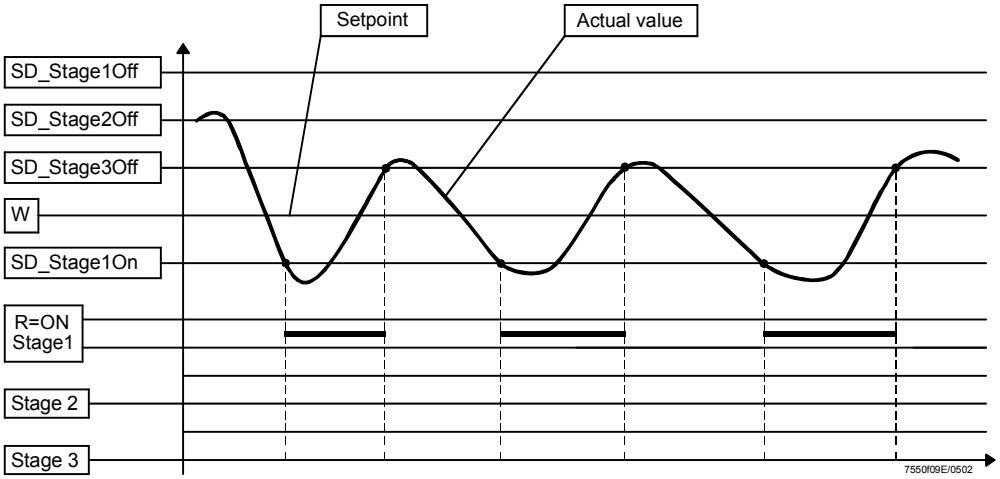

Example 2: Reaction thresholds Q2 and Q3 for switching on stages 2 and 3 are exceeded and the stages will be switched on.
In that case, stage 1 will be switched off when threshold W+ SD_Stage1Off is reached.

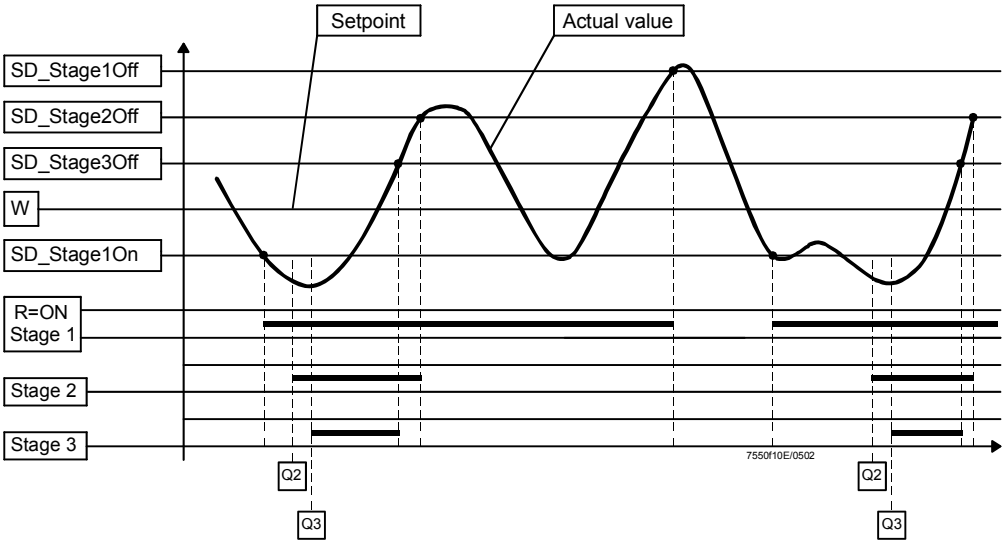

6.5 Actual values (X)

Measuring accuracy: Min. ± 1 % of the measuring range (excluding the sensor error).

Definition of sensors (incl. activation / deactivation of the temperature limiter function):
0 = input 1, Pt100, temperature (internal temperature limiter function = active)
1 = input 4, Pt1000, temperature, (internal temperature limiter function = active)
2 = input 4, LG-Ni 1000, temperature, (internal temperature limiter function = active)
3 = input 2, temperature, (internal temperature limiter function = not active)
4 = input 2, pressure, (internal temperature limiter function = not active)
5 = input 1, Pt100, for temperature controller and temperature limiter function plus input 4, Pt1000, additionally for temperature limiter function
6 = input 1, Pt100, for temperature controller and temperature limiter function plus input 4, LG-Ni 1000, additionally for temperature limiter function
7 = no sensor (e.g. in the case of external predefined loads and without internal temperature limiter function)

Parameter	*PhysicalUnits (°C / bar / °F / psi)*
	SensorSelection (Pt100 / Pt1000 / Ni1000 / TempSensor / PressureSensor / Pt100Pt1000 / Pt100Ni1000 / No Sensor)

Input 1, TEMP, Pt100 sensor (DIN) X60

3-wire circuit (copper wires), line balancing is not required when the resistances of the measuring leads are identical.
temperature limiter function is active.

The end of measurement range at 150 °C, 400 °C or 850 °C is depending on parameterization. With parameter *var.Messber.PtNi*, the variable end of measurement range can be set at 850 °C to 100 °C. Thereby, a protection is compass for fault settings of the setpoint, because the setting range of setpoint is limited to the end of measurement range automatically.

Note!
Set the end of measurement range of 850 °C and reduce the variable end of measurement range to 100 °C. A scale is not connected with this change, because the Pt curves are fixed stored.

Start of measuring range: 0 °C or equivalent to 32 °F
End of measuring range: 150 °C or equivalent to 302 °F
400 °C or equivalent to 752 °F
850 °C or equivalent to 1562 °F

Recognition of short circuit at measurement range:
150 °C: approx. 165 °C
400 °C: approx. 440 °C
850 °C: approx. 1000 °C
Reducing of variable measurement range does **not** change the recognition of short circuit.

For the end of the measuring range of 850 °C / 1562 °F, another parameter called *var.RangePtNi* is used.

Setting range: Continuously up to 850 °C or equivalent to 1562 °F

Parameter	*MeasureRangePtNi*
	var.RangePtNi

Input 2: TEMP. / PRESS INPUT, DC 0...10 V / DC 2...10 V / 4...20 mA / 0…20 mA X61

This input can be parameterized as a pressure or temperature input.

The temperature limiter function is **not** active.
Active power supply by the LMV5...; typically, a pressure or temperature sensor / transmitter is connected here (e.g. QBE2002-P).
Power supply to the pressure sensor: DC 20 V / 25 mA (nominal rating).

Parameter	*MeasureRangePtNi*
	Ext Inp X61 U/I: (4...20 mA / 2...10 V / 0...10 V / 0…20 mA)

Measuring range temperature (can be parameterized)

Start of measuring range: 0 °C or equivalent to 32 °F

End of measuring range: Continuously up to 2,000 °C or equivalent to 3,632 °F

Parameter	*MeasureRange TempSensor*

Measuring range pressure (can be parameterized)

Start of measuring range: 0 bar or equivalent to 0 psi

End of measuring range: Continuously up to 100 bar or equivalent to 1,450 psi

Detection of sensor short-circuit and open-circuit is provided (distance from ends of the measuring range about 10 % of the measuring range).

In the case of DC 0...10 V / 0…20 mA signals, detection of short-circuits and open-circuits is not possible.

If a fault is detected, the burner will be shut down (changing to the safety phase). If the short-circuit or open-circuit disappears within the safety phase, a change to standby will take place. Otherwise, lockout will be triggered.

Parameter	*MeasureRange PressSensor*

Input 4: TEMP, Pt1000 / LG-Ni 1000 X60

2-wire circuit. Line balancing is not required if the resistances of the measuring leads are small compared to the sensor's resistance.
The temperature limiter function is active.
The sensors to be used are QAE22.5A, QAE21.1 and QAE2112.0151.

Start of measuring range: 0 °C or equivalent to 32 °F
End of measuring range: 150 °C or equivalent to 302 °F or
400 °C or equivalent to 752 °F
850 °C or equivalent to 1562 °F

For the end of the measuring range of 850 °C / 1562 °F, another parameter called *var.RangePtNi* is used.

Setting range: Continuously up to 850 °C or equivalent to 1562 °F

Parameter	*MeasureRange PtNi*
	var.RangePtNi

6.6 Setpoints (W)

Internal setpoint

Using the display and operating unit AZL5…, 2 setpoints (W1 and W2) can be adjusted. It is not possible to adjust a temperature controller setpoint higher than the actual limit value of the integrated temperature limiter function. The setting range automatically corresponds to the parameterized measuring range of the actual value. Changeover between W1 and W2 can be accomplished by means of an external (potential free) contact connected to input 3 (X62), «External predefinition of setpoint / load». W1 is active as standard (contact open).

Parameter	*SetpointW1*
	SetpointW2

Input 3: SET POINT INPUT X62

Input for an external predefined setpoint, suited for a predefined load or setpoint changeover. The input is passive (not powered by the LMV5...). Typically, an active PC output is connected here (PC output requires galvanic separation for PELV).

With DC 0…10 V / 0…20 mA signals, detection of short-circuits and open-circuits is not possible.

Parameter	*Ext Inp X62 U/I: (4...20 mA / 2…10 V / 0…10 V / 0...20 mA)*

External predefined setpoint

If parameterized for «Int LC X62», the input signal is converted to pressure or temperature according to the parameterization of the measuring range and interpreted as the boiler's setpoint. The setting range automatically corresponds to the parameterized measuring range of the actual value and can also be limited.

	Setpoint min. measuring range	Setpoint max. measuring range
I (mA)	0 / 4	20
U (V)	0 / 2	10

Detection of short-circuits and open-circuits of lines is ensured - similar to the sensor inputs (but not when configured for DC 0...10 V / 0…20 mA). The demand for heat results from the difference between actual value and setpoint.

Parameter	*Ext Setpoint min*
	Ext Setpoint max

Example: 0...10 V or 4...20 mA with *MeßTempSensor* = 150 °C

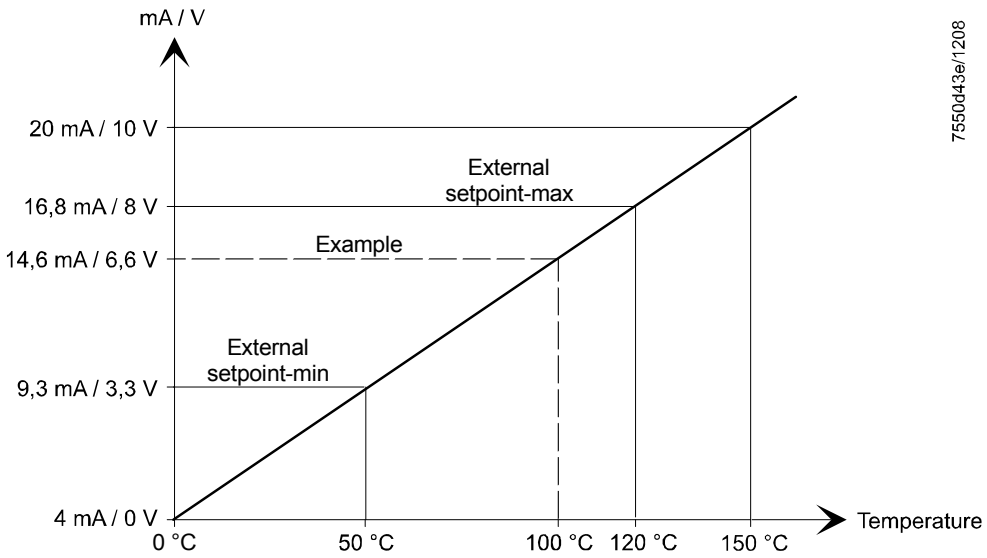

External predefined load

If parameterized for «Ext LC X62», the input signal is interpreted as the predefined load. This will internally be transmitted to fuel / air ratio control where it is translated into the respective actuator driving signals. Since the internal controller is inactive in this operating mode, control must be performed externally. If, in addition, a temperature sensor Pt100 (and / or Pt1000, LG-Ni 1000 sensor) is connected, it is also possible to use the internal temperature limiter function with the external predefined load.

External predefined load, modulating

	Part load	Nominal load
I (mA)	0 / 4	20
U (V)	0 / 2	10

External predefined load, multistage

	Stage 1	Stage 2	Stage 3
I (mA)	5	10	15
U (V)	2.5	5	7.5

Detection of short-circuits and open-circuits of lines is ensured - similar to the sensor inputs.

External setpoint changeover

In operating mode 2 (intLC), changeover between the 2 internally defined setpoints W1 and W2 can be accomplished by means of an external (potential free) contact.

External setpoints or predefined load via digital

The settings described under «Input 3» can also be made from a BACS connected to the AZL5… via RS-232 and bus interface.

An external predefined setpoint exists with «Int LC bus».
An external predefined load exists with «Ext LC bus».

Parameter	*LC_OptgMode (intLC o.DDC / extLC o.DDC)*

6.7 Integrated temperature limiter function

The **temperature** limiter function is implemented as a «safety-related» function. This means that the function is single-error-proof. In other words, a single error cannot negate the protective function of the controller and temperature limiter. The temperature limiter works similar to the 2-position controller but with a separate limit value that can only be changed after entry of a password.

The temperature limiter function also ensures that controller setpoints > TL_Threshold_Off cannot become active.
The temperature limiter function is only active in connection with the Pt100, Pt1000 and LG-Ni 1000 sensors. These sensors are monitored for short-circuits and open-circuits. Activation / deactivation of the temperature limiter function depends on the parameterization of the actual value input (parameter *SensorSelection*) (*refer to section Actual value (X)*).

Short-circuits or open-circuits of the temperature limiter sensors lead to «C = OFF», « temperature limiter = OFF» and to the relevant error message.

Parameter	*TL_ThreshOff*
	TL_SD_On

temperature limiter

Within the scope of TRD (Technical Directives for Steam), 2 temperature sensors are required to ensure the internal temperature limiter function.

The Pt100 input is always assigned to the temperature controller function. For the temperature limiter function, the Pt1000 or LG-Ni 1000 input is used for the second sensor.

Parameter	*Inp1/2/4Sel (Pt100Pt1000)*
	Inp1/2/4Sel (Pt100Ni1000)

Temperature limiter with external predefined load

The internal temperature limiter function can be used in all operating modes, provided the appropriate actual value input parameterization is made and the associated temperature sensor is connected.

Requirements placed on sensor and protection pocket

If the internal temperature limiter function is used, the time constant T of the temperature sensor with protection pocket must not exceed 45 seconds.

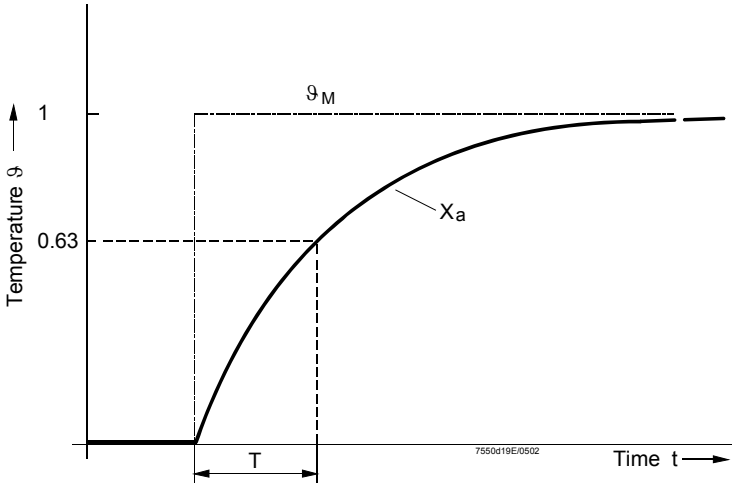

Instant temperature change of test medium to determine the time constant

ϑ_M	Temperature of test medium
X_a	Output signal of temperature sensor
T	Time constant

6.8 Cold start thermal shock protection (CSTP)

Thermal shock protection can be activated and deactivated.
A differentiation is made between modulating and multistage control.
The cold start sequence is activated when, on startup, the actual value lies below the ON threshold).
If thermal shock protection is activated, the manipulated variable on cold start will be increased in a stepwise fashion using the set load step (or the next stage will be activated).
The output will be increased as soon as the actual value has exceeded the start value of the load stage by the setpoint step.
If this switching threshold is not reached within the adjustable maximum time, heating will automatically be ensured by the next output stage. When the OFF threshold is reached, the cold start sequence will be terminated in order to switch to normal control operation.

Parameters:	Thermal shock protection on / off	*ColdStartOn*
	Activation value for thermal shock protection	*ThresholdOn*
	Deactivation value for thermal shock protection	*ThresholdOff*
	Load step (only for modulating mode)	*StageLoad*
	Setpoint step, modulating	*StageStep_Mod*
	Setpoint step, multistage	*StageStep_Stage*
	Max. time, modulating per step	*MaxTmeMod*
	Max. time, multistage per step	*MaxTmeStage*

6.8.1 Cold start thermal shock protection – modulating operation

For the output step, any output value in % can be predefined.
100 % divided by the output step gives the number of possible stages.

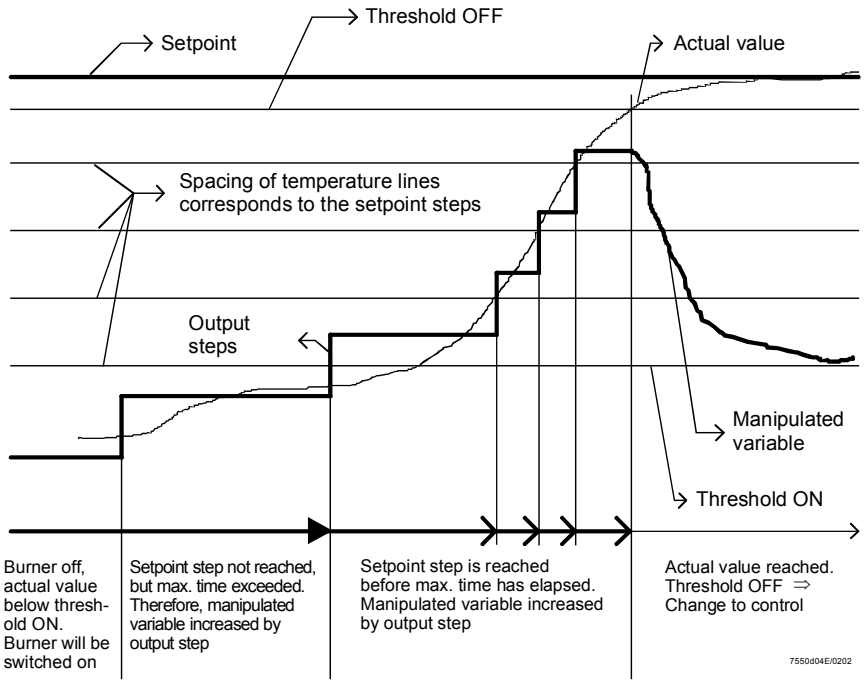

6.8.2 Cold start thermal shock protection – multistage operation

The difference between multistage and modulating control is that with multistage control the output steps are defined by the number of burner stages. With modulating control, any output value in % can be entered.

With multistage control, a maximum of 3 output stages are available:
1. Stage 1
2. Stage 1 and stage 2
3. Stage 1, stage 2 and stage 3

Use of the output stages 2 and 3 can be locked. In that case, the boiler is heated with stage 1 only.

Parameter	*Release Stages (release / no release)*

When stages 2 and 3 are locked, the system may stay in low-fire mode until the cold start function is terminated, if the output delivered by stage 1 is not sufficient to reach the switch-off threshold for thermal shock protection.

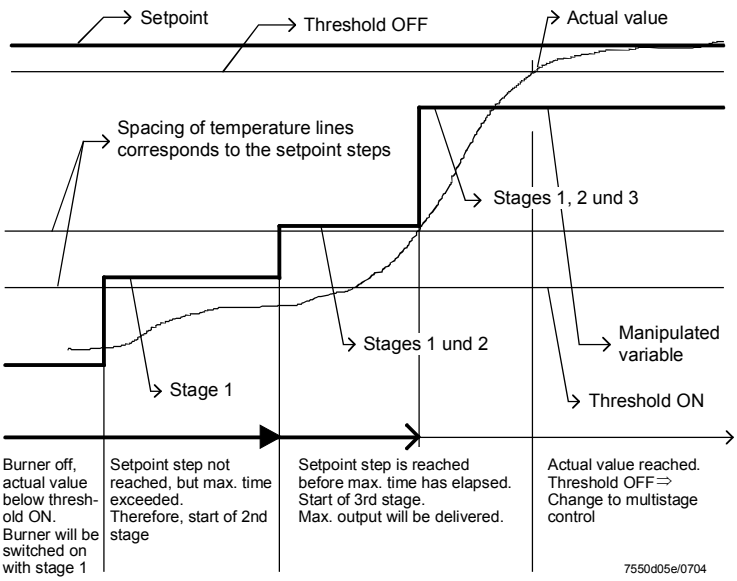

6.8.3 Cold start thermal shock protection with temperature sensor in pressure plants

In pressure plants, thermal shock protection can also be accomplished with a temperature sensor (additional sensor), as an alternative to the pressure sensor.

If an additional sensor is selected, the temperature setpoint for the additional sensor applies. «Threshold_Off» refers to that value.

Note: When using the pressure sensor, the temperature limiter is not active.

This function may only be used in combination with temperature or pressure sensors.

Parameter	*Additional Sensor (deactivated / PT100 / PT1000 / NI1000)*
	Setpoint AddSens
	Threshold_Off
	SensorSelection (Temp Sensor, Press Sensor)

6.9 Output

6.9.1 Analog output 0 / 4...20 mA

Among other things, this active output serves for delivering the current output, e.g. for boiler sequence control and display in BACS (when there is no bus coupling). Alternatively, other system data can also be delivered (see below). If a voltage signal is required, it can be made available by connecting a resistor (max. 500 Ω). The settings are to be made on the load controller / configuration / analog output.

Output: 0...100%

Restrictions:

The load controller only outputs the sensor data actually used (temperature limiter or control). Only *Pt1000 / Ni1000* can be output independent of usage.

Parameter	*OutValuSelection (Load / Load 0 / O2 / Pos Air / Pos Fuel / Pos Aux1 / Pos Aux2 / Pos Aux3 / Speed VSD / Flame / Temp Pt1000 / Temp Ni1000 / Temp Pt100 / Temp X61 / Press X61)*

Output, modulating

The load output *Load* appears after the internal fixed setting (refer to table). If other alternative settings of load output occur, the scalable parameter *Load 0* can be used.

	Burner OFF	0 %	100 %
I (mA)	4	4	20

Output, multistage

	Burner OFF	Stage 1	Stage 2	Stage 3
I (mA)	4	5	10	15

☞ **Note!**
With reset of LMV5... system, the output will be set of 0 mA for approx. 30 s!

Output other values

When selecting the other setting choices (all with the exception of *Load*), the output mode can be changed.

The output values can be scaled.

Parameter	*CurrMode 0/4mA (0…20 mA / 4…20 mA)*

Upper scaling parameter:

Parameter	*Scale20mA perc (0.0…999 %)*

Concerns: *Load 0 / O2 / Speed VSD / Flame*

Parameter	*Scale20mA temp (0…2000 °C)*

Concerns: *Temp Pt1000 / Temp Ni1000 / Temp Pt100 / Temp X61*

Parameter	*Scale20mA press (0.0…99.9 bar)*

Concerns: *Press X61*

Parameter	*Scale20mA angle (0.0…90°)*

Concerns: *Pos Air / Pos Fuel / Pos Aux1 / Pos Aux2 / Pos Aux3*

Lower scaling parameter:

This relative value always refers to the respective upper scaling value.

Parameter	*Scale 0/4mA (0.0…999 %)*

6.10 Multiboiler plants

Boiler sequence control is accomplished with the help of external devices or control systems (e.g. BACS or PCs).
In principle, there are 2 choices available:

6.10.1 Multiboiler plants by means of an analog input

For that purpose, the load controller of the LMV5… has an analog input (X62).

This means that the individual boilers can be
a) released / locked, and
b) operated at the required output
(or set to the required setpoint)

6.10.2 Multiboiler plants by means of a digital interface

For that purpose, BACS terminal X72 on the AZL5… can be used with the help of the bus interface.

Inputs:
- Controller release / lock
- Predefined setpoint or predefined load

Outputs:
- Actual value
- Controller ON / OFF
- Manipulated variable multistage / modulating
- Error messages

For more detailed information, refer to → section Cold start thermal shock protection

7 Display and operating unit AZL5...

Display and operating unit AZL5...

7.1 Assignment of AZL5… terminals

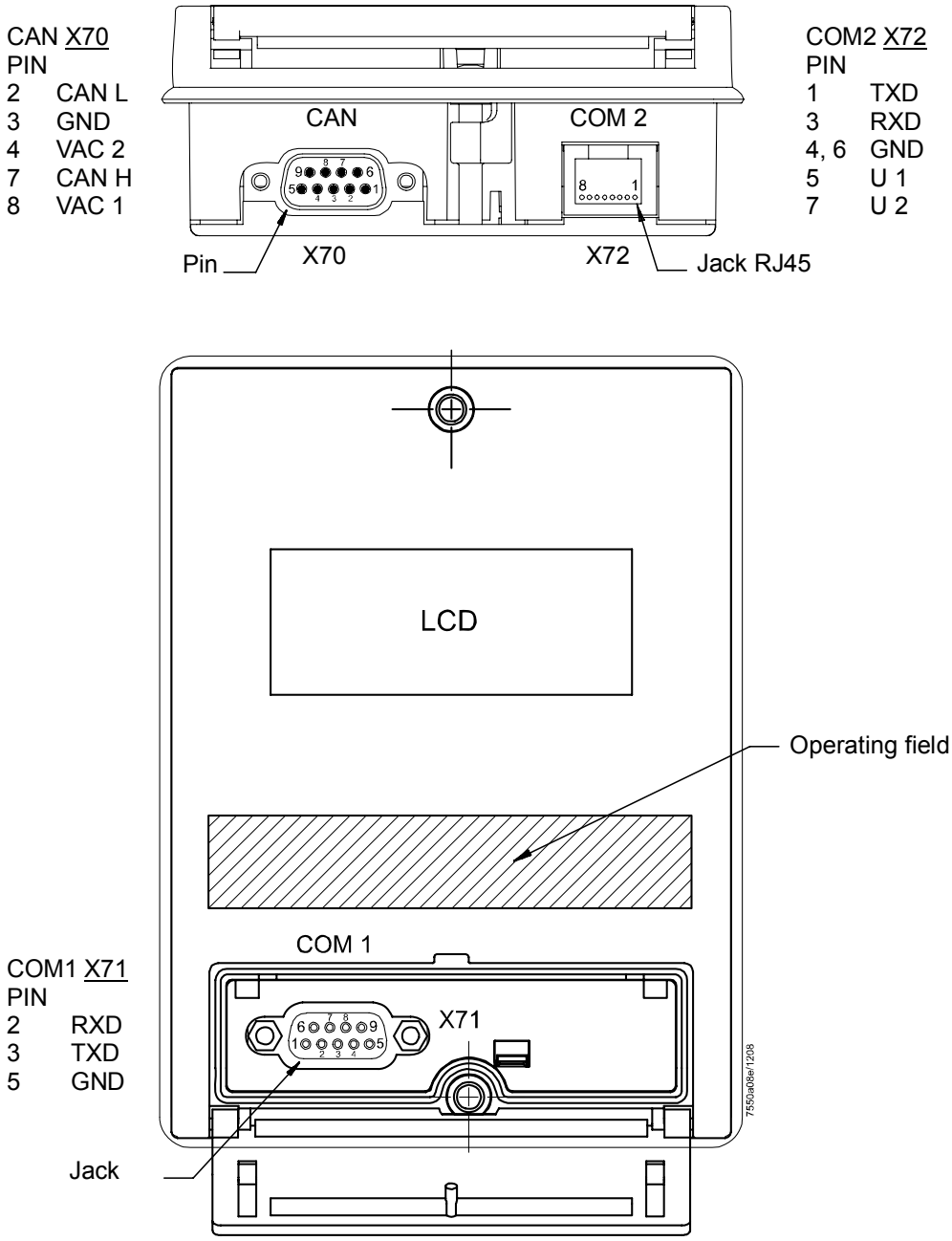

Pins without designation = not connected

COM1	Port for PC (RS-232); for parameterization and visualization with the help of the PC tool software, SUB-D 9 pins
COM2	Port for BACS via external bus interface (RS-232)
CAN X70	CAN bus connection for LMV5... basic unit, RJ45

Note COM1 and COM2 **cannot** be active at the same time!

Connecting cable to the PC

AZL COM1 9-pin connector		Cable	PC COM 9-pin socket	
1				1
2	RxD		RxD	2
3	TxD		TxD	3
4				4
5	GND		GND	5
6				6
7				7
8				8
9				9

7550t01E/0502

Pin assignment cable connection Siemens AZL5… - Trebing & Himstedt SPI3

Trebing & Himstedt SUB-D		AZL5… RJ45
Pin	RS-232	Pin
2	RxD	3
3	TxD	1
5	GND	4 6

Trebing & Himstedt SUB-D		Converter RS-232 / RS-485	AZL5… RJ45
Pin	RS-485	Depending on	Pin
3	Bus-P	manufacturer	1
8	Bus-N		3
			4 6

7.2 Ports of the AZL5…

The AZL5… has 3 ports:

- Port for the basic unit: CAN bus including power supply for the AZL5…
  (Sub-D connector on the underside of the AZL5…)
- Port for the PC / laptop: RS-232
  (Sub-D jack under the cover of the AZL5… front)
- Port for BACS
  including power supply for the external e-bus interface (RJ45 jack on the underside of the AZL5…)

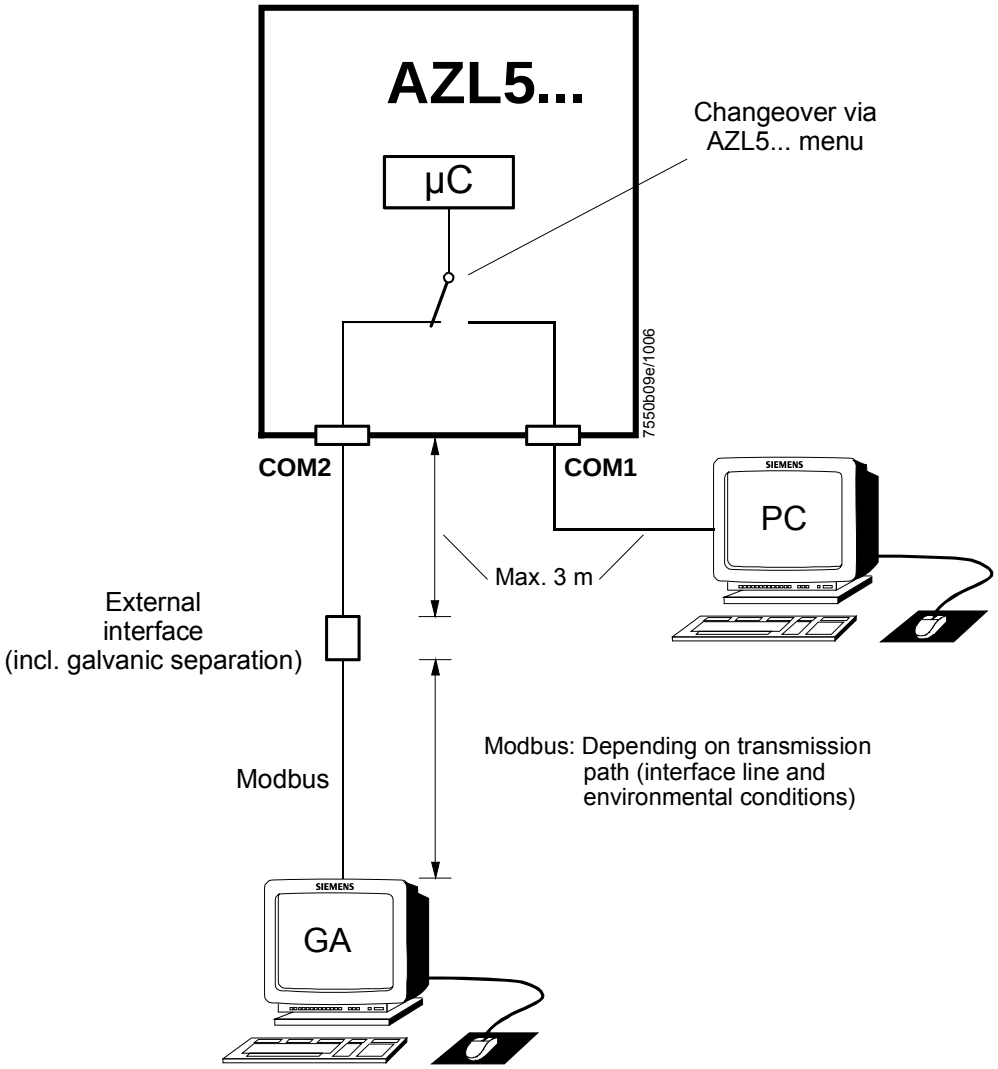

The AZL5… menu («Operation» → «Select operating mode») offers the following choices:

- Interface PC
- Gateway BACS on
- Gateway BACS off

Note

The CAN bus connection to the basic unit can simultaneously be combined with only **one** of the 2 ports, either «Interface PC» or «Gateway BACS».

7.2.1 Port for the PC

Communication with the PC takes place via the COM1 port of the AZL5…

The PC software ACS450 offers the following operating functions:
- Readout of settings, operating states, types of error, and points in time the errors occur (LMV5...)
- Graphic support for setting fuel / air ratio control
- Parameterization of the LMV5...
- Trend recording (write function)
- Printout functions for documenting the plant settings
- Program update of the AZL5…

For the standard operating functions, the following transmission parameters have been set:
- 19,200 bit / s
- 8 data bits
- No parity
- 1 stop bit

During the program update of the AZL5…, the transmission rate between PC tool and AZL5… is automatically increased to 38,400 bit / s.

7.2.2 Connection to superposed systems

(Refer to «Port for BACS»)

General information and BACS functions

Communication with a BACS is accomplished via a data link and an external bus interface with galvanic separation. That interface is to be connected to the COM2 port of the AZL5… It facilitates Modbus operation, depending on the configuration of the AZL5...

Modbus
With this bus protocol, the AZL5... operates as a slave. The transmission mode used is Remote Terminal Unit. For detailed information, refer to the document “Modbus AZL5...“.
Standardized interfacing software is available on request.

Example: Interconnection of Siemens Simatic S7 and LMV5... system

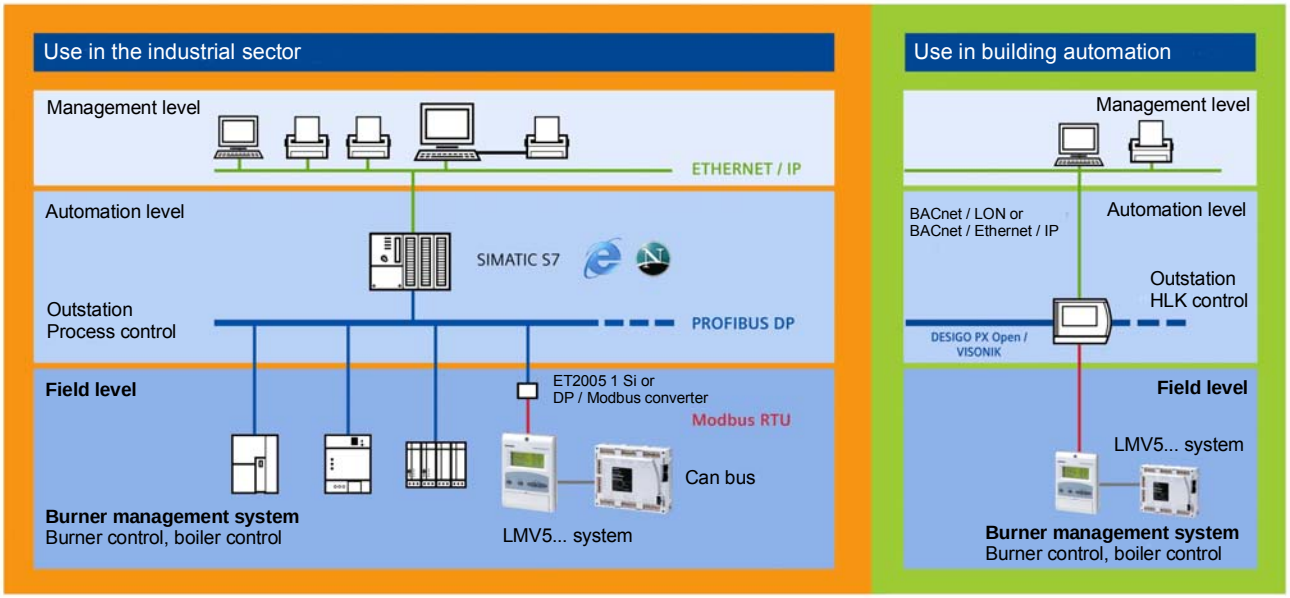

7550p19e/1006

Writing parameters

- Boiler sequence control (maximum 8 boilers)
  Boiler sequence control with predefined setpoints:
  On the AZL5… menu «Params & Display» → «SystemConfig», set the «LC_OptgMode» parameter to «Int LC bus»,
  or
  boiler sequence control with predefined load:
  In this case, set the parameter to «Ext LC bus».
- Select the type of fuel
- Set the date and the time of day

Only **non**-safety-related data may be changed via BACS.
A reset via BACS is **not** possible.

7.3 Display and settings

7.3.1 Menu structure

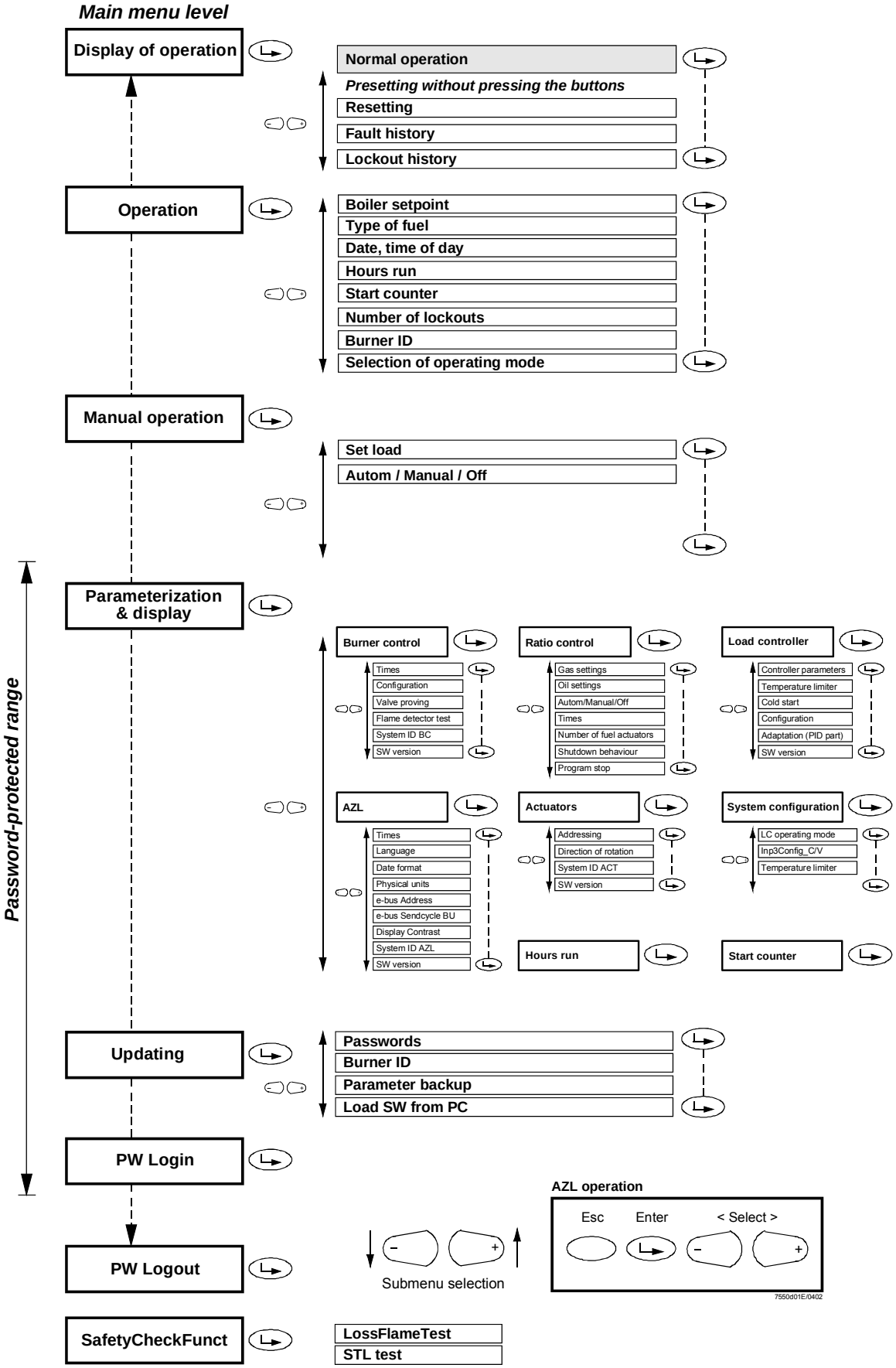

Displays

Below, the most important displays of «Normal operation» and examples of «Lockout and start prevention messages» and «Parameter settings» are defined.
In «Normal operation», the display shown is the default display which automatically appears and which is maintained as long as no settings are made and no unusual events like faults or start preventions occur.
The change from other displays to the normal display can be made by pressing the **Info** button.
If the startup procedure shall be watched, the display can be switched to «Normal operation» by simultaneously pressing the **Select** buttons «<» and «>» or the «Info» button.

Normal operation (undisturbed, no manual entries)

HOME RUN (Phase 10)

L	M	V		5	x										
H	o	m	e											1	0
S	t	a	r	t		N	o			1	2	3	4	5	6
F	0	5	.	1		A	0	2	.	4		0	4	.	3

STANDBY (Phase 12)

S	e	t	p	o	i	n	t			1	2	5	°	C	
A	c	t		V	a	l	u	e		1	2	4	°	C	
F	u	e	l									O	i	l	
S	t	a	n	d	b	y								1	2

STARTUP I (Phases 20, 21)

W	a	i	t	i	n	g		f	o	r					
S	t	a	r	t		R	e	a	l	a	s	e		2	1
F	0	5	.	1		A	0	2	.	4		0	4	.	3

STARTUP II (Phase 22)

S	t	a	r	t											
F	a	n		o	n									2	2
F	0	5	.	1		A	0	2	.	4		0	4	.	3

STARTUP III (Phase 24)

D	r	i	v	i	n	g		t	o						
P	r	e	-	p	u	r	g	i	n	g				2	4
F	0	5	.	1		L	4	4	.	6		3	0	.	3

STARTUP IV (Phases 30...34)

P	r	e	-	p	u	r	g	i	n	g				3	2
F	0	5	.	1		L	9	4	.	6		9	8	.	3

STARTUP V (Phase 36)

D	r	i	v	i	n	g		t	o						
I	g	n	i	t	i	o	n		P	o	s			3	6
F	6	5	.	1		L	4	4	.	6		1	0	.	3

Display (cont'd)

STARTUP VI (Phase 38)

I	g	n	i	t	i	o	n		P	o	s			3	8
F	3	2	.	1		L	4	2	.	3		2	2	.	3

STARTUP VII (Phases 40, 42, 44)

F	u	e	l												
R	e	l	e	a	s	e		1						4	0
F	l	a	m	e									8	0	%
F	3	2	.	1		L	4	2	.	3		2	2	.	3

STARTUP VIII (Phases 50, 52)

F	u	e	l												
R	e	l	e	a	s	e		2						5	0
F	l	a	m	e									8	0	%
F	3	2	.	1		L	4	2	.	3		2	2	.	3

STARTUP IX (Phase 54)

D	r	i	v	i	n	g		t	o						
L	o	w	-	f	i	r	e							5	4
F	2	8	.	5		L	3	8	.	3		1	8	.	5

OPERATION I (Phase 60)

S	e	t	p	o	i	n	t			1	2	5	°	C	
A	c	t		V	a	l	u	e		1	2	4	°	C	
S	e	t		L	o	a	d		5	7	.	5	%		
F	l	a	m	e						1	0	0	%		

OPERATION II (Phase 62)

S	h	u	t	-	d	o	w	n							
L	o	w	-	f	i	r	e							6	2
F	2	8	.	5		L	1	7	.	6		1	2	.	5

SHUTDOWN (Phase 70)

S	h	u	t	d	o	w	n								
														7	0
F	2	8	.	5		L	1	7	.	6		1	2	.	5

SHUTDOWN (Phase 72)

D	r	i	v	i	n	g		t	o						
P	o	s	t	p	u	r	g	e						7	2
F	0	5	.	1		L	4	4	.	6		3	0	.	3

SHUTDOWN (Phases 74...78)

P	o	s	t	p	u	r	g	i	n	g				7	4
F	2	8	.	5		L	1	7	.	6		1	2	.	5

Displays (cont'd)

SHUTDOWN (Phase 79)

T	e	s	t		A	i	r		P	r	e	s	s		
S	w	i	t	c	h									7	9
F	2	8	.	5		L	1	7	.	6		1	2	.	5

VALVE PROVING (Phases 80...83)

V	a	l	v	e		P	r	o	v	i	n	g			
														8	0
E	v	a	c	u	a	t	i	n	g						

V	a	l	v	e		P	r	o	v	i	n	g			
														8	1
T	e	s	t		a	t	m	o	s		P	r	e	s	s

V	a	l	v	e		P	r	o	v	i	n	g			
														8	2
F	i	l	l	i	n	g									

V	a	l	v	e		P	r	o	v	i	n	g			
														8	3
T	e	s	t		G	a	s		P	r	e	s	s		

Lockout and error messages

SAFETY PHASE (Phase 01)

S	a	f	e	t	y		P	h	a	s	e				
														0	1

LOCKOUT (Phase 00)

L	o	c	k	o	u	t									
R	e	s	e	t		v	i	a							
O	p	e	r	a	t	i	o	n	a	l	S	t	a	t	
	S	t	a	t	u	s	/	U	n	l	o	c	k		

Example: Display of lockouts in the lockout history

In the event lockout occurs, the display alternates at 5-second intervals.
Press **Enter** to choose 1 of the 2 display texts. In that case, the alternating cycle will be interrupted.
Example: Lockout due to a gas pressure signal in connection with gas valve proving.

1		1	8	.	0	6	.	9	9		1	0	:	3	5
C	:	3	1		D	:	0	0		P	:	8	1		
S	t	a	r	t		N	o		:	1	2	3	4	5	6
L	o	a	d	:			2	5	.	0			G	a	s

G	a	s		P	r	e	s	s	u	r	e		w		
V	a	l	v	e		P	r	o	v	i	n	g			
V	a	l	v	e		o	n		G	a	s				
S	i	d	e		l	e	a	k	i	n	g				

C = error code D = diagnostics
P = phase VP = gas valve proving

Example: Display of errors in the error history
In contrast to the lockout history, the error history contains the errors of all error classes and not only the lockouts.
If an error occurs, the display alternates at 5-second intervals.

1	2		C	l	a	s	s	:		0	3		G	A	S
C	o	d	e	:	2	1		P	h	a	s	e	:	2	4
D	i	a	g	:	0	0		L	o	d	:		0	.	0
S	t	a	r	t		N	o	:		1	2	3	4	5	6

Example: Safety loop open

S	a	f	e	t	y		L	o	o	p					
o	p	e	n	!											

Lockout and error messages (cont'd)

Example: Immediate display of lockouts
In the event lockout occurs, the display alternates at 5-second intervals.

L	o	c	k	o	u	t									

G	a	s		P	r	e	s	s	u	r	e		w		
V	a	l	v	e		P	r	o	v	i	n	g			
V	a	l	v	e		o	n		G	a	s				
S	i	d	e		l	e	a	k	i	n	g				

Example: Immediate display of safety shutdowns
In the event of safety shutdown, the display alternates at 5-second intervals.

S	a	f	e	t	y		S	h	u	t	d	o	w	n	

G	a	s		P	r	e	s	s	u	r	e		h	a	s
d	r	o	p	p	e	d		b	e	l	o	w			
m	i	n	i	m	u	m		L	i	m	i	t			

Example: Immediate display of warnings
In the event of warnings, the display alternates at 5-second intervals.

W	a	r	n	i	n	g									

C	u	r	v	e		G	r	a	d	i	e	n	t		
t	o	o		h	i	g	h								

Example: Immediate display of start preventions
In the event of start preventions, the display alternates at 5-second intervals.

S	t	a	r	t		P	r	e	v	e	n	t	i	o	n

A	i	r		P	r	e	s	s	u	r	e				
o	n														

Standard parameterizations (incl. entry of password)

For the complete parameter list, refer to Setting list I7550.

Menu selection
A main menu item is selected as follows:

O	p	e	r	a	t	i	o	n	a	l	S	t	a	t	
O	p	e	r	a	t	i	o	n							
M	a	n	u	a	l		O	p	e	r	a	t	i	o	n
P	a	r	a	m	s		&		D	i	s	p	l	a	y

Calling up and selection
To indicate a selection, the first letter of the menu item is shown with a flashing pointer. As long as the selection is made by pressing the **Select** buttons within the 4 menu items shown on the display, the selection scrolls.
If some other (presently not shown) menu item shall be selected, the menu display scrolls.
Press **Enter** to make the final selection.
This calling up and selection procedure is similar on all other menu levels.

Example:

O	p	e	r	a	t	i	o	n							
M	a	n	u	a	l		O	p	e	r	a	t	i	o	n
P	a	r	a	m	s		&		D	i	s	p	l	a	y
U	p	d	a	t	i	n	g								

Changing the standard parameters
This action is shown using the example of setting the prepurge time of the burner control section.

Selection of the associated main menu item:

The main menu item «Parameterization & Display» is called up and selected as described above:

O	p	e	r	a	t	i	o	n	a	l	S	t	a	t	
O	p	e	r	a	t	i	o	n							
M	a	n	u	a	l		O	p	e	r	a	t	i	o	n
P	a	r	a	m	s		&		D	i	s	p	l	a	y

P = flashing pointer

Entry of password (PW)

It is very important to study chapter «Safety notes on settings and parameterization»!
Before changing to the parameter settings range, a password must be entered. For that purpose, the display shown below appears.

First, the pointer points to the first character of the line «Access without PW». Access without password is always available for access level «Enduser».

- If a valid password has been entered, there will be no more password prompt when accessing this parameter setting level until the end of the legitimation period is reached, or until legitimation is manually deactivated
- If required, access to the parameters can be deactivated on the bottom line of the main menu before the legitimation period expires

If a password shall be entered, line «Enter password» is selected by means of decrementing (pointer points to the first character of that line) and selected by pressing **Enter**. Then, the pointer jumps to the first position of the password entry line. Now, through incrementing or decrementing, a character (digit or letter) can be selected. A character is confirmed by pressing **Enter**. If a wrong entry has been made, the last character can be edited again by pressing **Esc**.
The other password positions can be selected, edited and entered in a similar way. Hence, when making an entry, there is always only one character visible.
When the last character of the password is reached, the entry is to be confirmed by pressing **Enter**.

Service
OEM = burner manufacturer
SBT = Siemens

- The passwords are linked to the access levels (Service, OEM, SBT). This means that the parameters available for editing are only those associated with the access level
- When leaving the parameter setting level, a backup is offered

Start display

A	c	c	e	s	s		w	-	o	u	t		P	W	
A	c	c	e	s	s		S	e	r	v					
A	c	c	e	s	s		O	E	M						
A	c	c	e	s	s		S	B	T						

Display before the first password character is entered:

E	n	t	e	r		P	a	s	s	w	o	r	d		
:	*	*	*	*	*	*	*	*							

Display when entering the third password character:

E	n	t	e	r		P	a	s	s	w	o	r	d		
:	*	*	S	*	*	*	*	*							

If the check of the password entered is positive, the change to the next menu level will take place. Otherwise, the display will return to the main menu level.

First submenu level

Example: Calling up and selecting submenu «Burner control»

B	u	r	n	e	r	C	o	n	t	r	o	l			
R	a	t	i	o	C	o	n	t	r	o	l				
L	o	a	d		C	o	n	t	r	o	l	l	e	r	
A	Z	L													

Second submenu level

Example: Calling up and selecting submenu «Times»

T	i	m	e	s											
C	o	n	f	i	g	u	r	a	t	i	o	n			
V	a	l	v	e		P	r	o	v	i	n	g			
F	l	a	m	e	F	a	i	l	T	e	s	t			

Third submenu level

Example: Calling up and selecting submenu «Times Startup»

T	i	m	e		S	t	a	r	t	u	p	1			
T	i	m	e		S	t	a	r	t	u	p	2			
T	i	m	e		S	h	u	t	d	o	w	n			
T	i	m	e		G	e	n	e	r	a	l				

Fourth submenu level

Example: Calling up and selecting parameter «Prepurge Time Gas»

M	i	n	T	i	m	e	S	t	a	r	t	R	e	l
F	a	n	R	u	n	u	p	T	i	m	e			
P	r	e	-	p	u	r	g	e	T	i	m	e	G	a	s
P	r	e	-	p	u	r	g	e	T	i	m	e	O	i	l

Setting the parameter:

a) After the required parameter has been called up and selected, the display shown below will appear. Lines «Curr» and «New» show identical values at first, namely the actual parameter value.

The pointer automatically points to the colon on line «New». Here, the required new value can be entered,

whereby the AZL5… automatically displays the 4 possible line setting ranges with the associated resolutions:

- 0...12.6 s resolution 0.2 s
- 13...63 s resolution 1 s
- 70...630 s resolution 10 s
- 11...63 min resolution 1 min

P	r	e	-	p	u	r	g	e	T	i	m	e	G	a	s
C	u	r	r	:	1	2	.	6	s						
N	e	w		:	1	2	.	6	s						

Setting the new value

P	r	e	-	p	u	r	g	e	T	i	m	e	G	a	s
C	u	r	r	:	1	2	.	6	s						
N	e	w		:			3	0	s						

b) As soon as the basic unit has handled the parameter settings, the new value appears on line «Curr». The user has to make certain that the 2 values are identical (safety test of display).

P	r	e	-	p	u	r	g	e	T	i	m	e	G	a	s
C	u	r	r	:			3	0	s						
N	e	w		:			3	0	s						

The user can return to the next higher menu level by pressing **Esc**.

Addressing the actuators (function assignment)

To make the addressing, the actuator must be opened. A button and an LED are located behind the actuator's removable plastic cover.
In connection with addressing with the help of the AZL5…, the button is used to define the address of an actuator.
When commissioning the plant, the actuators are in their addressing mode.
To indicate this, the LED is steady on. If the LED is **not** steady on, refer to «Reset» below.

To make the addressing, the following menu is required on the AZL5…:
«Params & Display» → «Actuators» → «Addressing»

This menu contains the choice of actuators to be addressed (e.g. the air actuator). By appropriately positioning the pointer and then pressing **Enter**, the user can select the required actuator function.
Address assignment is started by pressing **Enter**. After a short period of time, the user will be prompted to press the button on the actuator to be addressed.
The AZL5… confirms the successful address assignment. To be sure, the address of the actuator can be checked against the blink code which now appears.
This procedure can be repeated for other actuators used by the system, but the AZL5… does not allow double assignments. In that case, a display tells the user that an appropriate actuator is already used by the system.

Direction of rotation

To select the direction of rotation, choose the following menu on the AZL5…:
«Params & Display» → «Actuators» → «DirectionRot»

You are given the choice of «Standard» and «Reversed»:

Standard (counterclockwise) **Reversed** (clockwise)

Facing the end of the drive shaft (**not** mounted)

To check the direction of rotation, every actuator can be moved in the home position in fault-free standby mode.
The parameter is filed in the basic unit so that the direction of rotation need not be reentered when replacing the actuator.

Note: After setting the ignition positions or curves, the direction of rotation can only be changed after deleting the curves and ignition positions on setting menu «*Delete Curves*».

Reset

This facility makes it possible to reset an already addressed actuator in the case of a replacement, repair, or if addressing is wrong (wrong address assignment by the user).
For that purpose, the user must press the actuator's addressing button for at least 10 seconds when the actuator is in normal operation. The actuator will then reset its address which is indicated by the LED when steady on.

Operational status indication by LED on the actuator

Power is fed to unaddressed actuator	LED steady ON

Button for addressing is pressed (display during addressing procedure)

Addressing completed, normal operation of actuator

The actuator gives the addressing number via the LED. The blink interval is 200 ms:

1 pulse	⇒	air actuator
2 pulses	⇒	gas actuator
3 pulses	⇒	oil actuator
4 pulses	⇒	auxiliary actuator
5 pulses	⇒	auxiliary actuator 2
6 pulses	⇒	auxiliary actuator 3

After each blink cycle, there is a pause of 1.2 seconds.

Example of an actuator for gas

Special function curve settings fuel / air ratio control

The following section covers the parameter settings of the curves used by the basic unit module «Fuel / air ratio control».

Selection menu «Ratio control»

The selection menu looks as follows:

S	e	t	t	i	n	g	s		G	a	s					1)
S	e	t	t	i	n	g	s		O	i	l					2)
A	u	t	o	m	/	M	a	n	u	a	l	/	O	f	f	3)
T	i	m	e	s												4)
N	u	m	F	u	e	l	A	c	t	u	a	t	o	r	s	5)
S	h	u	t	d	o	w	n	B	e	h	a	v				6)
P	r	o	g	r	a	m		S	t	o	p					7)

Selection of 3) through 6) leads to standard parameter settings of the parameters specified.

Selection of 1) leads to:
Selection menu «Settings gas»

Only the data associated with the currently active type of fuel can be parameterized.

S	p	e	c	i	a	l	P	o	s	i	t	i	o	n	s	1)
C	u	r	v	e		P	a	r	a	m						2)
L	o	a	d		L	i	m	i	t	s						3)
L	o	a	d		m	a	s	k		o	u	t				4)
A	u	x	A	c	t	u	a	t	o	r						5)

Calling up 1) (*HomePositions, PrepurgePositions*...), 3) through 5) leads to standard parameter settings of the parameters specified.

Selection of 2) leads to:
Selection menu «Curve Param» (modulating)

P	o	i	n	t	|	L	o	a	d		:	2	3	.	2	
		:		1	|	F	u	e	l		:	2	3	.	2	
M	a	n			|	A	i	r			:	4	1	.	6	
					|	A	u	x			:	3	3	.	3	
					I	A	u	x		2	:	2	9	.	2	only LMV52...
					I	A	u	x		3	:	1	3	.	8	only LMV52...
					I	F	U				:	4	5	.	0	only LMV52...

In this example, the ignition positions are copied to the first point of the curve.
This is always made automatically when the ignition positions are defined but no point on the curve has as yet been entered. The preliminary load value entered is the position value of the fuel actuator.
This point is also automatically approached as the low-fire point.
If the installer attempts to reach submenu «Curve parameter settings» before the ignition positions are defined, point number «1» appears. But the position fields display «XXXX», indicating that the data are **invalid**.
When making the parameter settings, the installer is guided, starting with entry of the ignition positions and coarse adjustment of the low- and nominal load positions to fine adjustment of the curve settings with up to 15 curvepoints.

This setting of the curve can be made in 2 different ways:
1. Individual points are specifically entered.
2. Fuel / air ratio control is operated manually until the value reached shall be stored as a new point.

A more detailed description of both approaches is given below:

Editing or introducing an individual point

In this setting mode, an individual point of curve is edited by acknowledging the pointer on «Point» with **Enter**, so that the pointer jumps to the curvepoint number.
By scrolling the (available) curvepoints, the point to be edited or a new point can be selected. After acknowledgement, the pointer jumps to the right field of the display, thus releasing the individual actuator positions and the associated load value for change or adjustment. Below, the procedure is shown in graphic form:
When accessing this menu, the pointer is positioned on «Point». To edit the curvepoint, the pointer must be positioned on «Point».

- Pointer positioned on «Point»:

P	o	i	n	t	|	L	o	a	d		:	2	3	.	5
					|	F	u	e	l		:	2	3	.	2
M	a	n			|	A	i	r			:	4	1	.	6
					|	A	u	x			:	3	3	.	3

- Continue with **Enter**

⇓

P	o	i	n	t	|	L	o	a	d		:	2	3	.	5
		:		3	|	F	u	e	l		:	2	3	.	2
	O	2			|	A	i	r			:	4	1	.	6
		4	.	5	|	A	u	x			:	3	3	.	3

After selecting the curvepoint number, the associated point data will always be displayed in the right column (see above). Below that, the currently acquired O2 value will now be shown if a PLL52.110A200 O2 module and an O2 sensor are connected to the system.
The first unused point always has the highest number. If, for instance, 3 points are used, a new point is given number 4 prior to sorting. The new point is also characterized by the display of «XXXX» for the point‘s data.

Note: When introducing a new point, the following display will be skipped!
- For changing the parameter data:
  Select the required curvepoint, then continue with **Enter**.

⇓

P	o	i	n	t	|	P	o	i	n	t					
		:		3	|	c	h	a	n	g	e	?			
M	a	n			|	d	e	l	e	t	e	?			
					|										

Here, the pointer position can change between «change?» and «delete?».
To edit the point, «change?» must be selected here.

- Continue with **Enter**

⇓

S	t	e	l	l	a	n	t	r	i	e	b	s	-	
p	o	s	i	t	i	o	n	e	n					
	M	i	t		A	n	f	a	h	r	e	n		
	O	h	n	e		A	n	f	a	h	r	e	n	

This selection can be used to determine whether the load and the positions of the selected curvepoint shall be approached. Hence, curvepoints can be changed without having to approach them.

The following description also applies to *without driving*, but the load and the positions will not be approached:

Curvepoints that have been changed with the *without driving* function must be checked to ensure that their combustion values will be correct!

If curvepoints have been set *without driving,* the degree of readjustment is based on estimation. This means that there is no proof yet that all curvepoints are correctly set from the combustion point of view. This must be ensured using adequate measuring equipment.

- Continue with **Enter**

⇓

P	o	i	n	t	|	L	o	a	d		:	2	3	.	5
		:		3	|	F	u	e	l		:	2	3	.	2
	O	2			|	A	i	r			:	4	1	.	6
		4	.	5	|	A	u	x			:	3	3	.	3

It is to be noted that with these settings, which can be made in standby and normal operation, the actuators will travel to the displayed or changed positions.
Traveling to the load that is assigned to the curvepoint can be stopped by pressing **Esc**. During the time the actuators approach the positions, the display shows « **>** » in place of « **:** ».

Note: If a new point is introduced, the point‘s data to be entered are the actual values.

The parameter that shall be changed (e.g. the fuel position) can be selected by changing the pointer position.

P	o	i	n	t	|	L	o	a	d		:	2	3	.	5
		:		3	|	F	u	e	l		:	2	3	.	2
	O	2			|	A	i	r			:	4	1	.	6
		4	.	5	|	A	u	x			:	3	3	.	3

After the selected point of curve has been reached by the system:
- Continue with **Enter**

⇓

P	o	i	n	t	|	L	o	a	d		:	2	3	.	5
		:		3	|	F	u	e	l		:	2	3	.	2
	O	2			|	A	i	r			:	4	1	.	6
		4	.	5	|	A	u	x			:	3	3	.	3

Now, the selected parameter can be changed online. This means that the system follows the changes at the rate of the selected ramp speed. Press **Enter** to save the changed values.
Now, additional parameters for change can be selected.
If **Esc** is pressed before **Enter**, changes made to the selected parameter (e.g. fuel position) will be rejected and the value last saved will be restored.

When leaving this level with **Esc**, the following query appears:

P	o	i	n	t											
S	t	o	r	e					-	>	E	N	T	E	R
C	a	n	c	e	l				-	>	E	S	C		

Enter saves the changes or the new point and adds them to the already existing points in the correct order (during the storage process, no buttons will be evaluated.
To indicate this, a symbol appears on the display).
The changes can be rejected by pressing **Esc**.

Canceling a curvepoint

When accessing this menu, the pointer is positioned on «Point». To cancel a curvepoint, the pointer must be positioned on «Point».

- Pointer positioned on «Point»:

P	o	i	n	t	|	L	o	a	d		:	2	3	.	5
					|	F	u	e	l		:	2	3	.	2
M	a	n			|	A	i	r			:	4	1	.	6
					|	A	u	x			:	3	3	.	3

- Continue with **Enter**

⇓

Point of curve number

P	o	i	n	t	|	L	o	a	d		:	2	3	.	5
		:		3	|	F	u	e	l		:	2	3	.	2
	O	2			|	A	i	r			:	4	1	.	6
		4	.	5	|	A	u	x			:	3	3	.	3

By calling up the curvepoint number the respective point is selected.
The data associated with the point number are always displayed in the column on the right (see above).

- For canceling the parameter data:
  Select the required curvepoint, then continue with **Enter**

⇓

P	o	i	n	t	|	P	o	i	n	t					
		:		3	|	c	h	a	n	g	e	?			
M	a	n			|	d	e	l	e	t	e	?			
					|										

Here, the pointer position can change between «change?» and «delete?».
To cancel the point of curve, «delete?» must be selected here.
Confirm by pressing **Enter**.
The selected point has been canceled and the actuators travel to the positions determined by the remaining curvepoints, in other words, the system's output will be maintained.

Setting the curve via manual control

In addition to curve settings by means of individual point entry, it is also possible to adjust the burner in manual operation with optional point storage. The procedure is the following:
After leaving menu item «CurveParams», position the pointer on «Man» when reaching the menu.

- Pointer positioned on «Man»:

P	o	i	n	t	|	L	o	a	d		:	2	3	.	5
					|	F	u	e	l		:	2	3	.	2
M	a	n			|	A	i	r			:	4	1	.	6
					|	A	u	x			:	3	3	.	3

After pressing **Enter**, the following display appears:

	O	2			|	L	o	a	d		:	2	3	.	5
		4	.	5	|	F	u	e	l		:	2	3	.	2
M	a	n			|	A	i	r			:	4	1		6
:	2	3	.	5	|	A	u	x			:	3	3	.	3

This menu enables the installer to manually change the output by using incrementing or decrementing commands, letting the actuators operate on interpolated straight lines (outside the parameterized curvepoints: Extrapolation). Above that, the currently acquired O2 value will now be shown if a PLL52.110A200 O2 module and an O2 sensor are connected to the system.
Traveling to the output preset here can be stopped by pressing **Esc**.
The actual curve settings are made by adjusting the entire fuel / air ratio control system based on the roughly predefined curvepoints and outside the already defined points. After pressing **Enter** again, new points can be introduced at the required positions.

Then, the values can be changed:

P	o	i	n	t	|	L	o	a	d		:	2	8	.	5
		:		3	|	F	u	e	l		:	2	8	.	4
	O	2			|	A	i	r			:	4	5	.	2
		4	.	5	|	A	u	x			:	3	1	.	3

The further setting procedure is the same as that used with «Edit individual point».

Example: Adjustment of the fuel / air ratio control system via manual control

Prerequisite: No curvepoints are parameterized.

1. Activating program stop
On menu: «Params & Display» → «Ratio Control» → «Program Stop»
→ parameterize from «deactivated» to «Stop_Ph24»

2. Starting the system
On menu: «Params &. Display» → «Ratio Control» → «Settings Gas / Oil» → «Special Positions» → «Autom / Manual / Off»
or on: «Manual Operation» → «Autom / Manual / Off» to «Burner on» and confirm.

3. Setting the prepurge positions
The system commences the startup sequence and stops in phase «Driving to Prepurge 24». Now, the prepurge positions can be set on menu «SpecialPositions». Then, on «ProgramStop», change to «Stop_Ph36.

4. Setting the ignition positions
The system continues the startup sequence and stops in phase «Driving to ignition position 36». Now, the ignition positions can be set on menu «SpecialPositions».
Then, on «ProgramStop», set to «Stop_Ph72», if operation shall immediately follow.
To readjust the ignition positions after the burner has ignited: «ProgramStop» to «Stop_Ph44», or «Stop_Ph52» for pilot ignition after the pilot flame has been shut down. Then, on «ProgramStop», set to «Stop_Ph72».

5. Curve settings via manual control

The system continues the startup sequence and assumes normal operation. The first curvepoint entered are the ignition positions and the load entered is the number of degrees (angular rotation) of the fuel actuator.

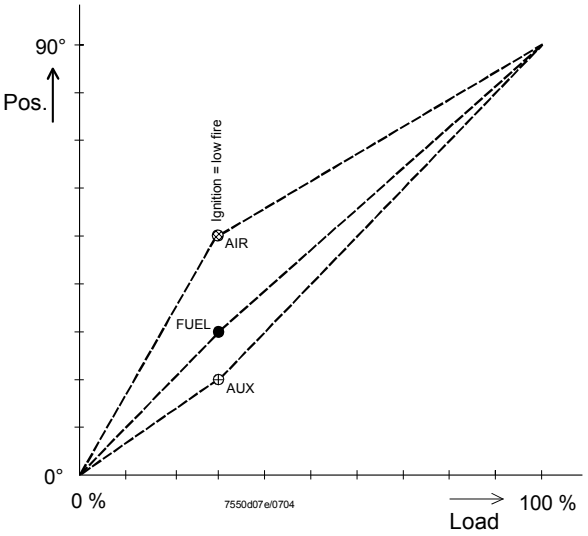

Change of load / position resulting from an automatically entered point

Choose «Man» from the menu «Params & Display» → «Ratio Control» → «Settings Gas / Oil» → «Curve Param». It is now possible to follow the above curves by changing the load. A point can be saved at every intermediate point. Then, the load / position graph will look as follows:

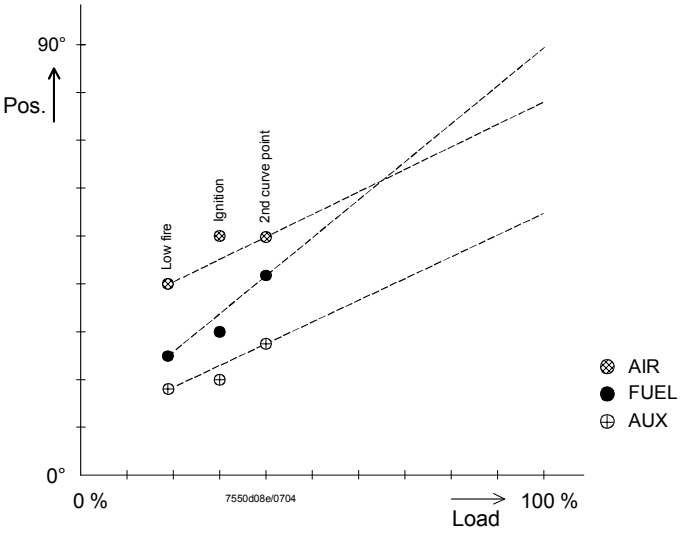

Change of load / position with two points

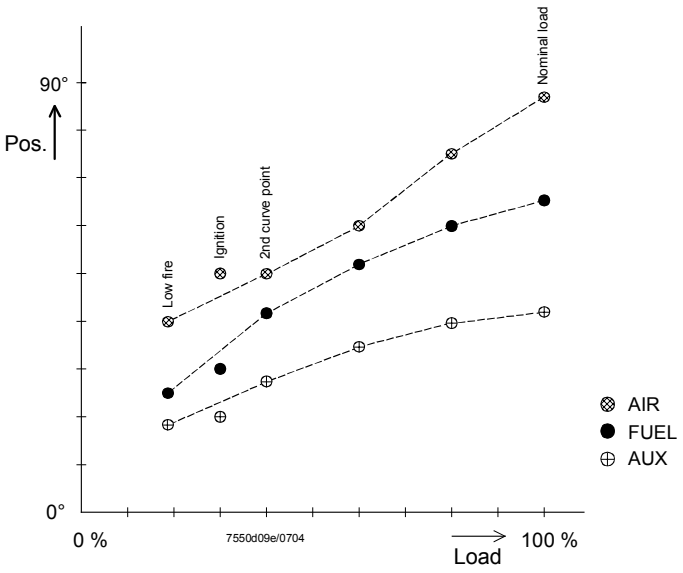

Change of load / position with several points

Using this method, up to 15 points can be defined.

6. Shutdown

On the menu: «Params & Display» → «Ratio Control» → «Settings Gas / Oil» → «Special Positions» → «Autom / Manual / Off»
or on: «Manual Operation» → «Autom / Manual / Off» to «Burner off» and confirm

7. Setting the postpurge positions

The system shuts down and stops in phase «Driving to postpurge 72».
Now, the postpurge positions on menu «Special positions» can be set.
Then, on «Program Stop», set to «deactivated».
The system continues the shutdown sequence and stops in phase «Standby 12».

Selection menu «Settings Oil»

Only the data associated with the currently active type of fuel can be parameterized.

S	p	e	c	i	a	l	P	o	s	i	t	i	o	n	s	1)
C	u	r	v	e		P	a	r	a	m	e	t	e	r		2)
L	o	a	d		L	i	m	i	t	s						3)
A	u	x	A	c	t	u	a	t	o	r						4)

Selection of 1) (*HomePositions, PrepurgePositions*), 3) and 4) leads to standard parameter settings of the parameters specified.

Selection of 2) leads to:

C	u	r	v	e		S	e	t	t	i	n	g	s			1)
O	p	e	r	a	t	i	o	n	M	o	d	e				2)

Selection of 2) leads to standard parameter settings of the operating mode (modulating or multistage).
Selection of 1) leads to curve setting, modulating (refer to gas) or curve setting, multistage, depending on the parameterized operating mode.

Setting modulating fuel / air ratio control

Refer to selection menu «Settings Gas»

Setting multistage fuel / air ratio control

With multistage fuel / air ratio control, the position values can be changed in 2 different ways:

1. Presetting the positions with no response by the actuators in order to fine-adjust the points later using «Followed».
2. Setting the switching and operating positions from «below» using «Followed». This means that stage 1 must be adjusted first, followed by the next switching on point, etc.

A	c	t	u	a	t	o	r								
P	o	s	i	t	i	o	n	s							
	f	o	l	l	o	w	e	d							
	n	o	t		f	o	l	l	o	w	e	d			

When the switch on / off and operating positions have been parameterized with «Not followed», the values can be changed. The system maintains its current load stage.
The menu offers the choice of «Followed» or «Not followed».
The display is maintained while the settings are made.
When accessing the menu, the operating positions «Stage 1» appear.
By pressing the **Selection** buttons the entered positions of all switching and operating points can be viewed.
This has no impact on the system, even if «Followed» has been selected:

If adjustment «Followed» selected, the parameterizing is carried out as follows:

P	o	i	n	t	I	A	i	r			:	2	8	.	5
:	B	S	1		I	A	u	x	1		:	2	8	.	4
	O	2			I						:				
		4	.	3	I						:				

Setting multistage fuel / air ratio control «Followed»

The startup is made similar to modulating operation, including automatic entry of the ignition positions in the operating positions «Stage 1», if these still display invalid values (showing: XXX.X as a value).

P	o	i	n	t	I	A	i	r			:	2	8	.	5
:	B	S	1		I	A	u	x	1		:	2	8	.	4
	O	2			I						:				
		4	.	3	I						:				

For the fine adjustment of that point, confirm by pressing **Enter**.

P	o	i	n	t	I	A	i	r			:	2	8	.	5
:	B	S	1		I	A	u	x	1		:	2	8	.	4
	O	2			I						:				
		4	.	3	I						:				

This causes output stage 1 to be approached. Here, the actuator to be adjusted can be selected. Again, confirm by pressing **Enter**.

P	o	i	n	t	I	A	i	r			:	2	8	.	5
:	B	S	1		I	A	u	x	1		:	2	8	.	4
	O	2			I						:				
		4	.	3	I						:				

Now, the value can be changed and the respective actuator follows at the rate of the set ramp speed.
Enter saves the value and **Esc** discards it.

In this way, all stages can be set, one after the other.
The following table shows the response of the system when a point is selected. However, the relevant valve is switched on only when at least the switching on point is definitely used (≠ XXXX).

Selected point	Response	Remark
Operating point stage 1	Approach of stage 1	Fine adjustment of stage 1
Switch-on point stage 1	Approach of stage 1	Setting from stage 1 off
Switch-off point stage 2	--	Setting from both stage 1 and stage 2 off
Operating point stage 2	Approach of stage 2	Fine adjustment of stage 2
Switch-on point stage 3	Approach of stage 2	Setting from stage 2 off
Switch-off point stage 3	--	Setting from both stage 2 and stage 3 off
Operating point stage 3	Approach of stage 3	Fine adjustment of stage 3

System response when a point is selected

Special function adaption load controller

Sequence steps of adaption (self-setting):

1) Starting the adaption

Using the AZL5… menu, the heating engineer manually activates the adaption function of the load controller.

After selecting menu item «Adaption» (within the parameter settings of the load controller), the following display will appear:

– The pointer is positioned on «Start adaption». Adaption is activated by pressing **Enter**

S	t	a	r	t		A	d	a	p	t	i	o	n		
w	i	t	h		E	N	T	E	R					6	0
S	e	t	p	o	i	n	t	:	7	0	.	0	°	C	
A	c	t		V	a	l		:	6	0	.	0	°	C	

Adaption starts after pressing **Enter** whereupon the following text appears:

A	d	a	p	t		a	c	t	i	v	e				
L	o	a	d					:	5	2	.	0	%		
A	c	t		V	a	l		:	6	0	.	0	°	C	
C	a	n	c	e	l		w	i	t	h		E	S	C	

Depending on the adaption step, the following displays appear, alternating with the display shown above:

A	d	a	p	t		a	c	t	i	v	e				
S	e	t	t	i	n	g		P	h	a	s	e			
m	a	x	.		1	0		m	i	n					
C	a	n	c	e	l		w	i	t	h		E	S	C	

A	d	a	p	t		a	c	t	i	v	e				
T	e	m	p		S	e	t	b	a	c	k				
A	c	t		V	a	l		:	6	0	.	0	°	C	
C	a	n	c	e	l		w	i	t	h		E	S	C	

A	d	a	p	t		a	c	t	i	v	e				
H	e	a	t	i	n	g									
m	a	x	.		1	0		m	i	n					
C	a	n	c	e	l		w	i	t	h		E	S	C	

2) End of a successful adaption
After the adaption, the relevant characteristics will be displayed.

By pressing the **Selection** buttons, the P-, I- and D-parts as well as the acquired loop delay time Tu will be displayed:

A	d	a	p	t	i	o	n		o	k					
P	-	P	a	r	t		(	X	p	)					
										X	2	5	.	0	%
C	o	n	t	i	n	u	e		w	i	t	h		<	>

A	d	a	p	t	i	o	n		o	k					
I	-	P	a	r	t		(	T	n	)					
												4	0	0	s
C	o	n	t	i	n	u	e		w	i	t	h		<	>

A	d	a	p	t	i	o	n		o	k					
D	-	P	a	r	t		(	T	v	)					
													3	5	s
C	o	n	t	i	n	u	e		w	i	t	h		<	>

A	d	a	p	t	i	o	n		o	k					
D	e	l	a	y		T	i	m	e		(	T	u	)	
													1	0	s
C	o	n	t	i	n	u	e		w	i	t	h		<	>

3) Canceling the adaption
If the load controller was not able to select a suitable loop, it will stop the adaption and display the following text.

If a running adaption is manually canceled by pressing **Esc**, the following text will also appear:

A	d	a	p	t	i	o	n								
c	a	n	c	e	l	e	d								
C	o	n	t	i	n	u	e		w		E	S	C		

The system changes to «Normal operation». In that case, the previous PID parameters will be maintained.

Burner identification
(burner ID)

Burner ID offers the OEM the opportunity - which may also be the OEM's duty - to store an **individual** burner ID in each LMV5... system by means of the OEM password, prior to delivery. The burner ID can be entered here, for example.

Burner ID is then used to enable or disable the data transfer between the basic unit and the AZL5… backup storage. Parameters can be loaded to the AZL5… at any time, if the burner ID in the basic unit is not in the «as supplied» status.

Saving the parameter from AZL5... in the basic unit is only possible, if the burner ID is the same as in the AZL5... and in the basic unit or the burner ID of basic unit is still in the delivery status.
The burner ID itself is part of the data transfer in both directions (if that is possible).
In addition, for the burner, the burner ID represents one of a number of start prerequisites. In other words, the burner cannot be started up as long as the burner ID is in the «as supplied» status.
So, it is possible to have data transmission between the basic unit and the AZL5… of **one** plant (burner IDs are identical) and between an AZL5… and a **new** basic unit (burner ID «as supplied» by Siemens).
Data transmission between AZL5… and basic units of different plants (burner IDs not identical) is not possible (no «cloning»!).

Makeup of burner ID	Invalid characters for the burner ID are all vowels (ä, ö, ü and ß). Minimum length of burner ID = 4 characters Maximum length of burner ID = 15 characters
Languages	The AZL5… can output the display texts in different languages. Changeover to another language takes place via menu «Params & Display» → «AZL5…» → «Language». In addition to English as the basic language, the AZL5… provides another 5 languages. This means that a language group can comprise a maximum of 6 languages. Using the program update function of the PC tool, additional language groups can be loaded to the AZL5… together with the relevant program version. Hence, direct exchange of the language without loading a new program version is not possible.
Real time clock and calendar	The LMV5... system is equipped with a real time clock with a calendar and backup, which is accommodated in the AZL5... The clock features automatic **s**ummer- / **w**intertime changeover.
S / W changeover	The following parameter setting choices are available: Parameter1 summer- / wintertime changeover: on / off Parameter2 summer- / wintertime changeover: EU version / US version **EU** version start: last Sunday in March end: last Sunday in October **US** version start: first Sunday in April end: like EU version Changeover takes place on the dates given above in the night between 02:00 and 03:00 hrs. The time shift is always 1 hour. Changeover takes place only if the AZL5… receives power at that moment in time.
Backup	Backup is about 10 years. The backup battery is a replaceable lithium battery.
Type of battery	Refer to «Technical data». When changing batteries, ensure ESD protection! If the AZL5… uses the associated interface to communicate with a building management center, the latter can act as the clock master by transmitting cyclically a preset time of day and date to the AZL5... This information is given priority over all other time of day / date sources.
Adjustment of contrast (display)	In «Normal operation» of the AZL5…, the contrast of the display can be adjusted. To do this, keep the **Enter** button depressed and, **at the same time,** press the **Selection** buttons (+ or -). The display contrast changes correspondingly. The adjustment unchanged up to switching off the supply voltage. For continuously adjustment, select via menu in the parameter level.
Shutdown function	Lockout of the basic unit can be triggered by **simultaneously** pressing **Enter** and **Esc**. Lockout will be stored in the basic unit.
Quick access Normal operation	To be able to check burner operation at all times, press the 2 **Select** buttons simultaneously to switch from any menu item to the «Normal operation» view, either during operation, when making parameter settings, or when programming. To return to the menu item previously used, press **Esc**.

7.4 TÜV (German technical inspection association) test

The TÜV test function may only be performed by authorized staff.

It is possible to activate
- the loss-of-flame test, and
- the safety limit thermostat test

Loss-of-flame test

The loss-of-flame test is triggered manually with the AZL5… and produces an interruption of the flame signal.
Using safety shutdown «Loss of flame», the LMV5... must shut the burner down.

Safety limit thermostat test

Activation of the safety limit thermostat test negates the internal controller and temperature limiter function.
The setpoint and the temperature limiter switch-off threshold will be ignored.
The burner will be switched on and the load automatically set to the following adjustable level.

Here, it is possible to set the load level that shall be approached in modulating operation:

Parameter	*SLT-TestloadMod*

Here, it is possible to set the load stage that shall be approached in multistage operation:

Parameter	*SLT-TestloadStg*

After a safety shutdown by safety limit thermostat locking or by a manual selection the safety limit thermostat test can be deactivated again.

8 Commissioning instructions for the LMV5... system

8.1 Practice-oriented setting instructions for the system configuration, the burner control, and the electronic fuel / air ratio control system

These settings instructions serve for commissioning the LMV5… system.
To access the parameter setting levels, a password must be entered.
After having entered the correct password, the data will appear on the AZL5… (backup for emergencies). Then, the unit can be parameterized.
After leaving the parameter setting level, we recommend to make a backup.

8.1.1 Basic configuration

1. Parameterizing the burner identification (burner ID)

Menu level 1	Menu level 2	Menu level 3	Menu level 4	Menu level 5	Menu level 6
Updating					
	BurnerID				

Burner identification: E.g. OEM13-10-02-003 (name of OEM = burner manufacturer; date 13-10-2002, production number 003); minimum 4 characters

2. Selecting the fuel trains

Menu level 1	Menu level 2	Menu level 3	Menu level 4	Menu level 5	Menu level 6
Params & Display					
	BurnerControl				
		Configuration			
			ConfigGeneral		
				FuelTrainGas	
				FuelTrainOil	

FuelTrainGas from *DirectIgniG* to *Pilot Gp2*
FuelTrainOil from *LightOilLO* to *HO w Gasp*

3. Checking the inputs / outputs while taking into account the burner and plant conditions. *For details, refer to chapter Digital inputs.*

Menu level 1	Menu level 2	Menu level 3	Menu level 4	Menu level 5	Menu level 6
Parameter					
	BurnerControl				
		Configuration			
			ConfigInput/Output		

4. Setting gas valve proving

Menu level 1	Menu level 2	Menu level 3	Menu level 4	Menu level 5	Menu level 6
Params & Display					
	BurnerControl				
		ValveProving			
			ValveProvingType		

Selection of gas valve proving: No VP, VP startup, VP shutdown or VP stup/shd
(→ «Gas valve proving system»)

5. Addressing the actuators

Prior to programming the actuators, the connector for the bus connection at the last CAN bus element must be plugged in.

Menu level 1	Menu level 2	Menu level 3	Menu level 4	Menu level 5	Menu level 6
Params & Display					
	Actuators				
		Addressing			
			1. AirActuator *2. GasActuat(Oil)* *3. OilActuator* *4. AuxActuator* *5. AuxActuator 2* *6. AuxActuator 3*		

For addressing an actuator, select the respective type of actuator:
1. Air actuator
2. Gas actuator (oil) [for dual-fuel burners with only one fuel actuator]
3. Oil actuator
4. Auxiliary actuator
5. Auxiliary actuator 2
6. Auxiliary actuator 3
Confirm by pressing **Enter** (→ «Display and operating unit AZL5…»).

The AZL5… prompts you to operate the addressing switch on the actuator.

6. Selecting the actuator's direction of rotation

Menu level 1	Menu level 2	Menu level 3	Menu level 4	Menu level 5	Menu level 6
Params & Display					
	Actuators				
		DirectionRot			
			DeleteCurves *1. AirActuator* *2. GasActuat.(Oil)* *3. OilActuator* *4. AuxActuator* *5. AuxActuator 2* *6. AuxActuator 3*		

Select the direction of rotation with *Standard* or *Reversed*.
The standard direction of rotation is anticlockwise when facing the end of the drive shaft (→ «Display and operating unit AZL5…»).

Note: To check the direction of rotation, every actuator can be rotated when in the home position (see item 11). After setting the ignition positions / curves, the direction of rotation can only be changed after canceling the curves and the ignition positions on the setting menu «*DeleteCurves*».

7. Configuration of VSD (only LMV52.2...) (subsection 17.1.2)

Depending on the application and the type of fuel (with or without auxiliary actuator), the auxiliary actuator can be activated or deactivated, or used as a VSD (only LMV51.2...).

Menu level 1	Menu level 2	Menu level 3	Menu level 4	Menu level 5	Menu level 6
Params & Display					
	RatioControl				
		GasSettings			
			Actuator		
		OilSettings			
			Actuator		

LMV52... activating and deactivating the actuators

In accordance with the application and the type of fuel, the actuators can be activated or deactivated. Here, it is also defined whether the relevant actuator influences the air volume.

Menu level 1	Menu level 2	Menu level 3	Menu level 4	Menu level 5	Menu level 6
Params & Display					
	RatioControl				
		GasSettings			
			AirActuator		
			AuxActuator 1		
			AuxActuator 2		
			AuxActuator 3		
			VSD		
		OilSettings			
			AirActuator		
			AuxActuator 1		
			AuxActuator 2		
			AuxActuator 3		
			VSD		

8. Setting the load controller (option)

Menu level 1	Menu level 2	Menu level 3	Menu level 4	Menu level 5	Menu level 6
Params & Display					
	LoadController				
		Configuration			
			LC_OptgMode		

Select a load controller operating mode in accordance with the examples given in chapter «Operating modes with load controller».

This configures the output signal for the VSD (section 6.3)

9. Selecting a temperature or pressure sensor

If the internal load controller of the LMV5… is used, a temperature or pressure sensor must be connected to input 1, 2 or 4.

Menu level 1	Menu level 2	Menu level 3	Menu level 4	Menu level 5	Menu level 6
Params & Display					
	LoadController				
		Configuration			
			SensorSelection *MeasureRange* *PtNi* *Ext Input X61 U/I* *MeasureRange* *TempSensor* *MeasureRange* *PressSens* *Ext Setpoint minExt Setpoint max*		

On the configuration level of the load controller, select the required type of sensor. Then, define the sensor's measuring range.

This configures speed acquisition (subsection 17.1.3)

8.1.2 Settings for gas-fired operation

The next steps explain how the fuel / air ratio control system is to be set.
Specific curves are required for each type of fuel.

10. Activating program stops in different program phases

Activate a program stop when startup shall be stopped to set the special positions.

Prepurging	Phases 24 - 34
Ignition position	Phase 36
Interval 1	Phase 44
Interval 2	Phase 52
Postpurging	Phases 72 - 78

Menu level 1	Menu level 2	Menu level 3	Menu level 4	Menu level 5	Menu level 6
Params & Display					
	RatioControl				
		ProgramStop			
			deactivated *24PrePurgP* *32PreP FGR* *36IgnitPos* *44Interv1* *52Interv2* *72PostPPos* *76PostPFGR*		

Activate a program stop in phase 24.

11. Checking and presetting the actuators positions for gas ignition

The unit is supplied with presettings for the parameters «home position, prepurge and postpurge position». These positions should be checked and adapted if required, either now or during the following program stops.
The ignition positions are **not** predefined. In this section, a valid setting must be made or, otherwise, burner startup is **not** possible.

Menu level 1	Menu level 2	Menu level 3	Menu level 4	Menu level 5	Menu level 6	
Params & Display						
	RatioControl					
		GasSettings				
			SpecialPositions			
				IgnitionPos		
					IgnitionPosGas *IgnitionPosAir* *IgnitionPosAux*	
					IgnitionPosAux2 *IgnitionPosAux3* *IgnitionPosVSD*	***Only LMV52...***

Example: Gas actuator: 32.5° Air actuator: 25.6°

12. Manual startup

To start the burner, select *«Autom/Manual/Off»* and *«BurnerOn»*.

Menu level 1	Menu level 2	Menu level 3	Menu level 4	Menu level 5	Menu level 6
ManualOperation					
	Autom/Manual/Off				

If startup shall be watched, press simultaneously selection buttons «<» and «>» to switch the display to «Normal operation».

13. Actuator positions during the prepurge time

The burner control stops startup during the prepurge phase (phase 24).
The positions of the actuators for prepurging can thus be set very straightforwardly.

Menu level 1	Menu level 2	Menu level 3	Menu level 4	Menu level 5	Menu level 6	
Params & Display						
	RatioControl					
		GasSettings				
			SpecialPositions			
				PrepurgePos		
					PrepurgePosAir *PrepurgePosAux*	
					PrepurgeAux2 *PrepurgeAux3* *PrepurgeVSD*	**Only LMV52...**

Note:

The prepurge position of auxiliary actuator 3 is approached in phase 32 (flue gas recirculation).

After the settings have been made, the program stop in the prepurge position should be replaced by the program stop of the ignition position in phase 36.

14. Ignition positions

The burner control continues the startup sequence until the ignition position (phase 36) is reached. Then, it stops again so that the actuator's ignition positions can be set.

Menu level 1	Menu level 2	Menu level 3	Menu level 4	Menu level 5	Menu level 6	
Params & Display						
	RatioControl					
		GasSettings				
			SpecialPositions			
				IgnitionPos		
					IgnitionPosGas *IgnitionPosAir* *IgnitionPosAux*	
					Aux2 *Aux3* *VSD*	***Only LMV52...***

To verify the ignition positions again, the control sequence can be stopped in interval phase 44 or 52 (interval with ignited flame on completion of the relevant safety time).
On deactivation of the program stop, the burner continues its program until the operating phase (phase 60) is reached.
If no point for the fuel / air ratio control system has as yet been predefined, the first curvepoint «P1» to be adopted on a preliminary basis are the ignition positions of the actuators.

15. Setting the curve

First setting

The burner travels to the ignition load. The burner's output should now be increased manually and in steps of the curve setting until the nominal capacity (100 %) is reached. During the manual procedure, the actuators travel on the interpolated straight line to the maximum position of 90° at 100 % output. The flue gas values and the stability of the flame must be constantly checked. It may be necessary to define provisional curvepoints, which can be canceled again later. As soon as the nominal capacity is reached, the burner should be optimized with regard to flue gas values.

Note

It is recommended to measure the gas throughput at **each curvepoint** in order to reflect the real burner output on the display in relation to the maximum gas throughput.

- Press the **Esc** button to leave the curvepoint setting
- Store the curvepoint by pressing **Enter**
- Now, select the second curvepoint. The settings of the previous curvepoint will be adopted on a preliminary basis
- Store the second curvepoint like the first one

During storage, the LMV5... sorts the curvepoints based on rising output. This means that you can enter the curvepoints in any order you like as long as the output was correctly set. Proceed in this way point by point until the minimum output is reached. After storage of the minimum output point, leave the curve setting.

Menu level 1	Menu level 2	Menu level 3	Menu level 4	Menu level 5	Menu level 6
Params & Display					
	RatioControl				
		GasSettings			
			CurveParams		
				Point	
				Manual	

Example:

Point	1	2	3	4	5
Order of setting	5	4	3	2	1
Output	15 %	28 %	50 %	71 %	100 %
Gas	8.6°	28.0°	43.0°	62.5°	81.5°
Air	10.5°	28.8°	46.0°	55.7°	70.8°
Aux	20.3°	30.0°	45.0°	52.0°	60.0°

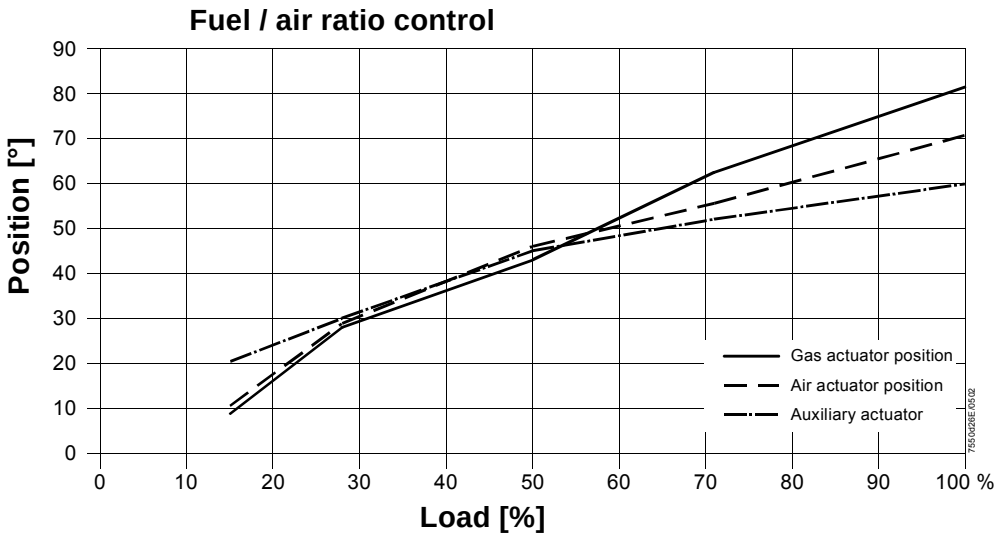

Changing an existing curve

The curvepoints can be changed during burner off periods (phase 12) or during burner operation (phase 60).
To change an existing curve, select the curvepoint in «Point» mode. You are now able to change the point, or to cancel it.

Menu level 1	Menu level 2	Menu level 3	Menu level 4	Menu level 5	Menu level 6
Params & Display					
	RatioControl				
		GasSettings			
			CurveParams		
				Point	
				Manual	

Creating a new curvepoint

To create a new curvepoint, select «Manual». Set the output of the new point and acknowledge by pressing **Enter**.
During the manual procedure, the actuators travel on the interpolated straight lines between the curvepoints.
After pressing **Enter**, each individual actuating device can be selected to optimize the position.
To leave the curvepoint setting, press the **Esc** button and store the point by pressing **Enter**.

16. Load limits

Finally, you can limit the burner output to a minimum and maximum in accordance with the boiler's requirements.

Menu level 1	Menu level 2	Menu level 3	Menu level 4	Menu level 5	Menu level 6
Params & Display					
	RatioControl				
		GasSettings			
			LoadLimits		
				MinLoadGas *MaxLoadGas*	

17. Shutdown

Choose *«Autom/Manual/Off»* to select *«BurnerOff»*.

Menu level 1	Menu level 2	Menu level 3	Menu level 4	Menu level 5	Menu level 6
ManualOperation					
	Autom/Manual/Off				

8.1.3 Settings for multistage oil-fired operation

18. Fuel changeover for oil-fired operation

Fuel changeover on the AZL5… is possible only if input «FuelSelect» is set to «internal». Set fuel selection to «Oil» or set the external fuel selector to «Oil».

Menu level 1	Menu level 2	Menu level 3	Menu level 4	Menu level 5	Menu level 6
Operation					
	Fuel				
		FuelSelect			

19. Changing the burner operating mode from modulating to multistage (only when firing on oil)

Here, the burner operating mode can be set to «2-stage» or «3-stage».

Menu level 1	Menu level 2	Menu level 3	Menu level 4	Menu level 5	Menu level 6
Params & Display					
	RatioControl				
		OilSettings			
			CurveParams		
				Operation Mode	

20. Activating the program stops in the different program phases

Activate the program stop if startup shall be interrupted to continue setting the special positions.

Prepurge	Phases 24 - 34
Ignition position	Phase 36
Interval 1	Phase 44
Interval 2	Phase 52
Postpurge	Phases 72 - 78

Menu level 1	Menu level 2	Menu level 3	Menu level 4	Menu level 5	Menu level 6
Params & Display					
	RatioControl				
		ProgramStop			
			deactivated *24PrePurgP* *32PreP FGR* *36IgnitPos* *44Interv1* *52Interv2* *72PostPPos* *76PostPFGR*		

Activate a program stop in phase 24.

21. Checking and presetting the ignition positions for firing on oil

For the parameters «home, prepurge and postpurge position», the parameter set as supplied contains presettings. These should be checked and, if necessary, adapted, either now or during the following program stops.
There is **no** presetting for the ignition position. In this section, a valid setting must be made because otherwise, the burner cannot be started up.

Menu level 1	Menu level 2	Menu level 3	Menu level 4	Menu level 5	Menu level 6	
Params & Display						
	RatioControl					
		OilSettings				
			SpecialPositions			
				IgnitionPos		
					IgnitionPosOil *IgnitionPosAir* *IgnitionPosAux*	
					Aux2 *Aux3* *VSD*	***Only LMV52...***

Example: Auxiliary actuator: 22.5° Air actuator: 37.6°
These values are also transferred to operating point S1 even if it has not yet been set.

22. Manual startup

To start the burner, select *«Autom/Manual/Off»* to choose *«BurnerOn»*.

Menu level 1	Menu level 2	Menu level 3	Menu level 4	Menu level 5	Menu level 6
ManualOperation					
	Autom/Manual/Off				

If startup shall be watched, the display can be changed to «Normal operation» by pressing simultaneously selection buttons «<» and «>».

23. Actuator positions during the prepurge time

The burner control stops startup in the prepurge phase (phase 24), so that the positions of the actuators for prepurging can be straightforwardly set.

Menu level 1	Menu level 2	Menu level 3	Menu level 4	Menu level 5	Menu level 6	
Params & Display						
	RatioControl					
		OilSettings				
			SpecialPositions			
				PrepurgePos		
					PrepurgePosAir *PrepurgePosAux*	
					Aux2 *Aux3* *VSD*	***Only LMV52...***

Note:

The prepurge position of auxiliary actuator 3 is approached in phase 32 (flue gas recirculation).

After the settings are made, the program stop in the prepurge position should be replaced by the program stop of the ignition position in phase 36.

24. Ignition positions

The burner control proceeds with the startup sequence until the ignition position (phase 36) is reached. There, the burner control stops again for setting the ignition positions of the actuators.

Menu level 1	Menu level 2	Menu level 3	Menu level 4	Menu level 5	Menu level 6	
Params & Display						
	RatioControl					
		OilSettings				
			SpecialPositions			
				IgnitionPos		
					IgnitionPosOil *IgnitionPosAir* *IgnitionPosAux*	
					Aux2 *Aux3* *VSD*	***Only LMV52...***

To repeatedly verify the ignition positions, the control sequence can be stopped in interval phase 44 or 52 (interval with ignited flame on completion of the respective safety time).
When the program stop is deactivated, the burner proceeds with its program until normal operation is reached (phase 60).
If the switching points of the burner stages have not yet been defined, the ignition positions of the actuators will be used as the first stage for the moment.

25. Setting the burner stages

The burner runs at ignition load or at the first burner stage. The positions of the actuators can now be changed.

Menu level 1	Menu level 2	Menu level 3	Menu level 4	Menu level 5	Menu level 6
Params & Display					
	RatioControl				
		OilSettings			
			CurveParams		
				Curve Settings	
					Actuator *Positions* *followed* *not followed*

It is recommended to use the function «*Actuator positions followed*» to set the switching points and operating points of the second and third stage.

Menu level 1	Menu level 2	Menu level 3	Menu level 4	Menu level 5	Menu level 6
Params & Display					
	RatioControl				
		OilSettings			
			CurveParams		
				Curve Settings	
					Actuator *Positions* *followed* *not followed* ——————— *SetPointStage1* *StartPointStage2* *OffPointStage2* *SetPointStage2* *StartPointStage3* *OffPointStage3* *SetPointStage3*

Example:

Stage	S1	S2 on	S2 off	S2	S3 on	S3 off	S3
Air	35.0°	43.0°	45.0°	53.0°	61.0°	62.0°	69.0°
Aux	13.0°	28.0°	20.0°	43.0°	50.0°	50.0°	54.0°

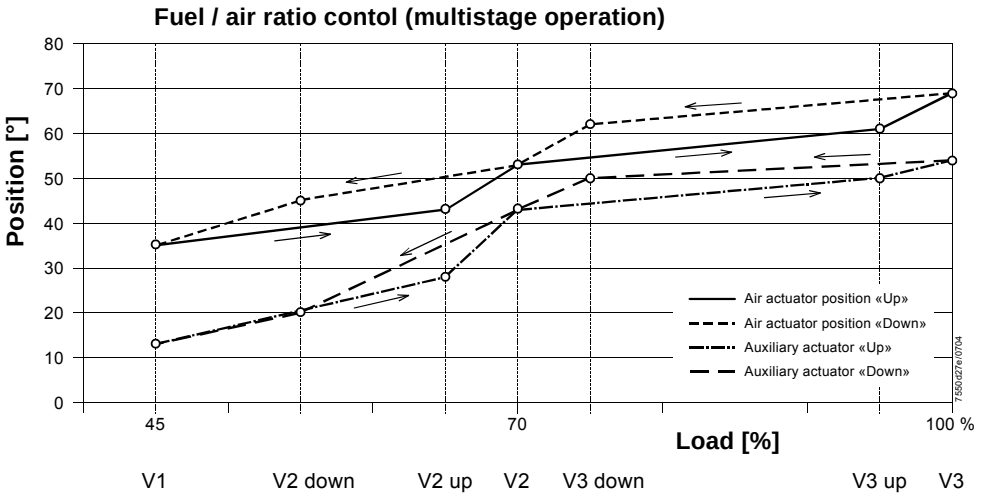

26. Shutdown Select *«Autom/Manual/Off»* and then *«BurnerOff»*.

Menu level 1	Menu level 2	Menu level 3	Menu level 4	Menu level 5	Menu level 6
ManualOperation					
	Autom/Manual/Off				

8.1.4 Extra functions of the LMV5...

27. Valve proving (leakage test)

Menu level 1	Menu level 2	Menu level 3	Menu level 4	Menu level 5	Menu level 6
Params & Display					
	BurnerControl				
		ValveProving			
			ValveProvingType		
			Config_PM-VP/CPI		
			VP_EvacTme		
			VP_TmeAtmPress		
			VP_FillTme		
			VP_Tme_GasPress		

The gas volume contained in the piping between the valves (including the valve volume) must be calculated in accordance with the gas train.

Example of fuel train

Program G Direct ignition

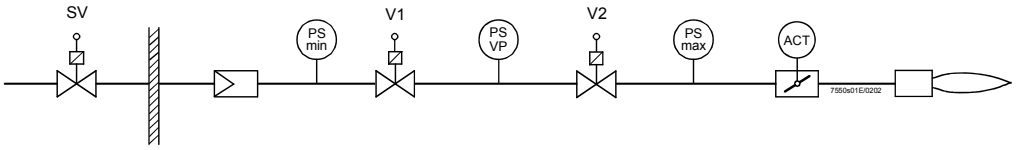

Determination of the test time with predefined leakage rate to be detected during valve proving:

$$t_{Test} = \frac{(P_G - P_W) \cdot V \cdot 3600}{P_{atm} \cdot Q_{Leck}}$$

Determination of the detected leakage rate during valve proving:

$$Q_{Leck} = \frac{(P_G - P_W) \cdot V \cdot 3600}{P_{atm} \cdot t_{Test}}$$

Legend

Q_{Leck}	in l / h	Leakage rate in liters per hour
P_G	in mbar	**Overpressure** between the valves at the beginning of the test phase
P_W	in mbar	Overpressure set on the pressure switch (normally 50 % of the gas inlet pressure)
P_{atm}	in mbar	**Absolute air pressure** (1,013 mbar normal pressure)
V	in l	Volume between the valves (test volume) including valve volume and pilot path (Gp1) if present
t_{Test}	in s	Test time

Example 1 (calculation of test time)

P_G = 30 mbar
P_W = 15 mbar
P_{atm} = 1013 mbar
V = 3 l
Q_{Leck} = 50 l / h

$$t_{Test} = \frac{(30 - 15)\ \text{mbar} \cdot 3\ \text{l} \cdot 3600\ \text{s / h}}{1013\ \text{mbar} \cdot 50\ \text{l / h}} = \mathbf{3.2\ s}$$

Result: The test time to be set is 4 seconds

Example 2 (determination of detectable leakage rate)

P_G = 30 mbar
P_W = 15 mbar
P_{atm} = 1013 mbar
V = 3 l
t_{Test} = 4 s

$$Q_{Leck} = \frac{(30 - 15)\ \text{mbar} \cdot 3\ \text{l} \cdot 3600\ \text{s / h}}{1013\ \text{mbar} \cdot 4\ \text{s}} = \mathbf{40.0\ l / h}$$

Result: The detected leakage rate is 40 l / h

8.1.5 Configuration of the load controller

Selection of operating mode

→ «Operating modes with the load controller»

Example: Internal load controller with Pt1000 sensor.

Menu level 1	Menu level 2	Menu level 3	Menu level 4	Menu level 5	Menu level 6
Params & Display					
	SystemConfig				
		LC_OptgMode			
			ExtLC X5-03 *Int LC* *Int LC Bus* *Int LC X62* *Ext LC X62* *Ext LC Bus*		

Or, alternatively:

Menu level 1	Menu level 2	Menu level 3	Menu level 4	Menu level 5	Menu level 6
Params & Display					
	LoadController				
		Configuration			
			LC_OptgMode		
				ExtLC X5-03 *Int LC* *Int LC Bus* *Int LC X62* *Ext LC X62* *Ext LC Bus*	

After the internal load controller has been activated, the sensor input must be selected and configured.

Menu level 1	Menu level 2	Menu level 3	Menu level 4	Menu level 5	Menu level 6
Params & Display					
	LoadController				
		Configuration			
			SensorSelection		
				Pt100 *Pt1000* *Ni1000* *TempSensor* *PressSensor* *Pt100Pt1000* *Pt100Ni1000* *NoSensor*	

Then, the temperature measuring range must be defined.

Menu level 1	Menu level 2	Menu level 3	Menu level 4	Menu level 5	Menu level 6
Params & Display					
	LoadController				
		Configuration			
			MeasureRange PtNi		
				150°C/302°F *400°C/752°F*	

8.1.6 Control parameters of the load controller

The control parameters can be defined in 3 different ways.

1. Selection of the standard parameter set

The memory of the load controller contains 5 standard parameter sets.
Depending on the characteristics of the controlled system, a PID triple value can be selected and activated.

The following standard parameter sets can be chosen:

	P [%]	I [s]	D [s]
Very fast	40	55	15
Fast	4	35	17
Normal	7	90	50
Slow	15	320	40
Very slow	30	400	10

2. Individual setting of the PID parameters

Alternatively, the PID parameters can be directly selected and set within the predefined value range.

Menu level 1	Menu level 2	Menu level 3	Menu level 4	Menu level 5	Menu level 6
Params & Display					
	LoadController				
		ControllerParam			
			ContrlParamList		
				StandardParam	
					Adaption *very fast* *fast* *normal* *slow* *very slow*

Or

				P-Part (Xp) *I_Part (Tn)* *D-Part (Tv)*	

3. Automatic adaption

With the method of adapting the control parameters, the characteristic data of the controlled system are acquired with an adaption procedure whereupon matching PID parameters will be calculated.
If possible, the adaption load should be 100 %.

Menu level 1	Menu level 2	Menu level 3	Menu level 4	Menu level 5	Menu level 6
Params & Display					
	LoadController				
		Adaption			
			StartAdaption		
			AdaptionLoad		

Temperature limiter function

The integrated temperature limiter observes a separate temperature limit.
(for details → «Integrated temperature limiter function»).
After the switch-off point in °C for the temperature limiter has been entered, the relative switch-on point in % will be given.

Example:	TW_Threshold_Off:	80 °C
	TW_SwiDiff_On	-10 % (= 8 K)
	Temperature limitation on at	72 °C

Menu level 1	Menu level 2	Menu level 3	Menu level 4	Menu level 5	Menu level 6
Params & Display					
	LoadController				
		TempLimiter			
			TL_Thresh_Off		
			TL_SD_On		

Or

	SystemConfig				
		TempLimiter			
			TL_Thresh_Off		
			TL_SD_On		

Boiler setpoints W1 and W2

2 boiler setpoints can be adjusted which, however, must not lie above the actual limit value of the temperature limiter function (→ «Setpoints»).
Changeover from setpoint W1 to setpoint W2 is accomplished by means of an external, potential-free contact at input 3.

Menu level 1	Menu level 2	Menu level 3	Menu level 4	Menu level 5	Menu level 6
Params & Display					
	LoadController				
		ControllerParam			
			Setpoint W1		
			Setpoint W2		

Or

Operation					
	BoilerSetpoint				
		Setpoint W1			
		Setpoint W2			

2-position controller (C = ON / OFF)

Example: Modulating control

After the boiler setpoint in °C has been entered, the switch-on and switch-off point of the 2-position controller in % will be given.
The switching points will be calculated in relation to the current setpoint.

Example:	Setpoint:	70 °C
	SD_ModOn	+5 % (= 3.5 K)
	SD_ModOff	+10 % (= 7 K)
	Controller loop open (Off)	70 + 3.5 = 73.5 °C
	Controller loop closed (On)	70 - 7 = 63 °C

Menu level 1	Menu level 2	Menu level 3	Menu level 4	Menu level 5	Menu level 6
Params & Display					
	LoadController				
		ControllerParam			
			SD_ModOn		
			SD_ModOff		

Diagram

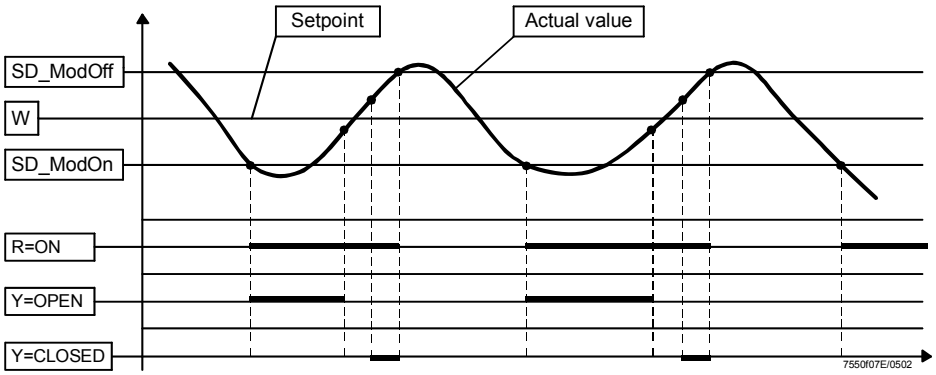

Cold start thermal shock protection (CSTP)

When the cold start thermal protection has been activated, a boiler – after having dropped below a predefined switch-on threshold – will be heated up in multistage operation. This approach ensures that when cold, the boiler does not have to satisfy the maximum demand for heat within a very short period of time. Thermal strain on the boiler will thus be prevented.

Description

The cold start sequence will be activated when, on startup, the actual value lies below the switch-on threshold. When cold start thermal shock protection is activated, the manipulated variable - on cold start - will be increased in a stepwise fashion using the adjusted output step (or the next stage will be switched on).

Start output for the cold start is the minimum load. The increase of the output by the output step depends on 2 criteria:

1. If the predefined change of the actual value is not reached with the current output (setpoint step modulating or setpoint step multistage), the output will be increased by this step (output step) when the maximum time has elapsed.
2. If the predefined change of the actual value is reached with the current output within the maximum time, the output will be increased by one output step.

When the switch-off threshold is reached, the cold start sequence will be terminated and normal control operation started.

Example

Modulating burner with pressure control

For the output step, any output value in % can be predefined. 100 % divided by the output step gives the number of possible steps.

Parameters:	Shock protection on / off	*ColdStartOn*	activated
	Shock protection activation level	*ThresholdOn*	40 % of setpoint
	Output step (only for modulating operation)	*StageLoad*	10 % of burner output
	Setpoint step modulating	*StageStep_Mod*	10 % of setpoint
	Max. time modulating per step	*MaxTmeMod*	5 minutes
	Shock protection deactivation level	*ThresholdOff*	80 % of setpoint

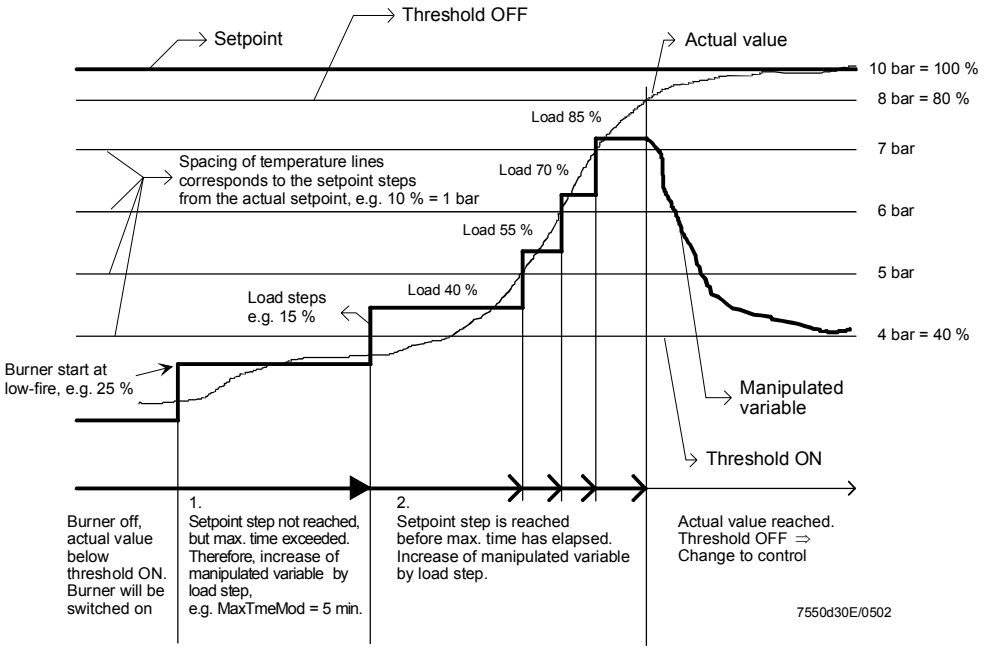

Menu level 1	Menu level 2	Menu level 3	Menu level 4	Menu level 5	Menu level 6
Params & Display					
	LoadController				
		ColdStart			
			ColdStartOn *ThresholdOn* *StageLoad* *StageStep_Mod* *StageStep_Stage* *MaxTmeMod* *MaxTmeStage* *ThresholdOff*		

9 Connection terminals / coding of connectors

9.1 Connection terminals LMV51.040x1

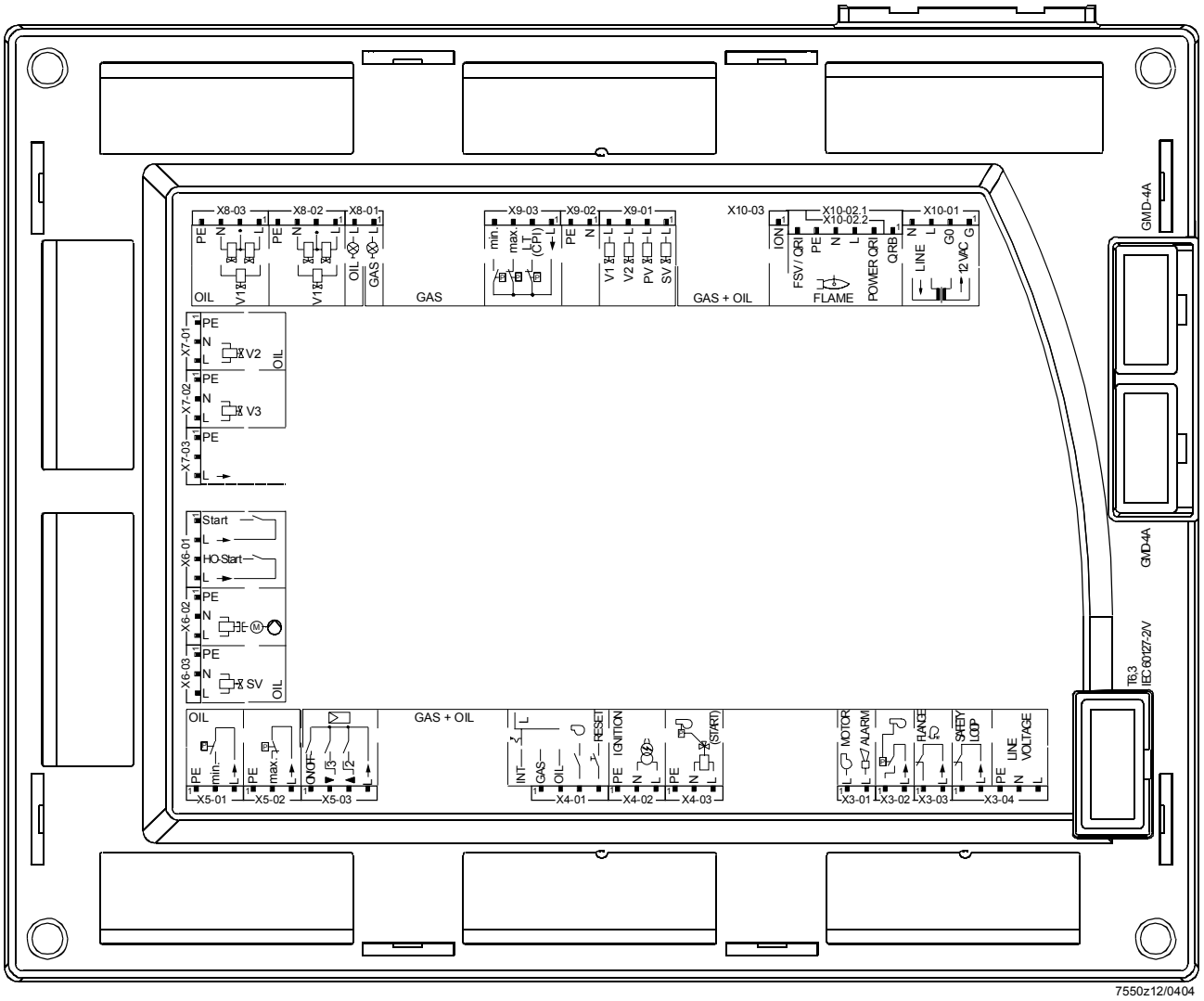

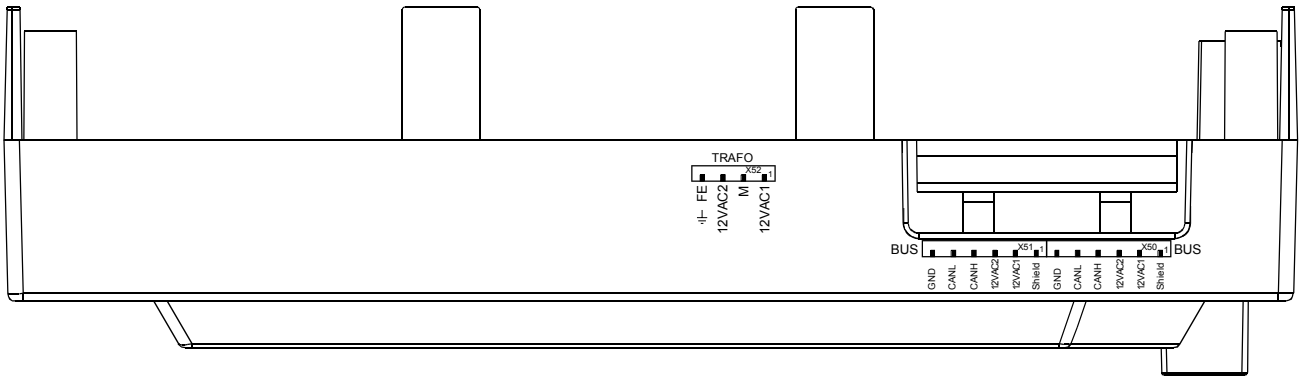

9.2 Connection terminals LMV51.000x1 / LMV51.000x2 / LMV51.040X22

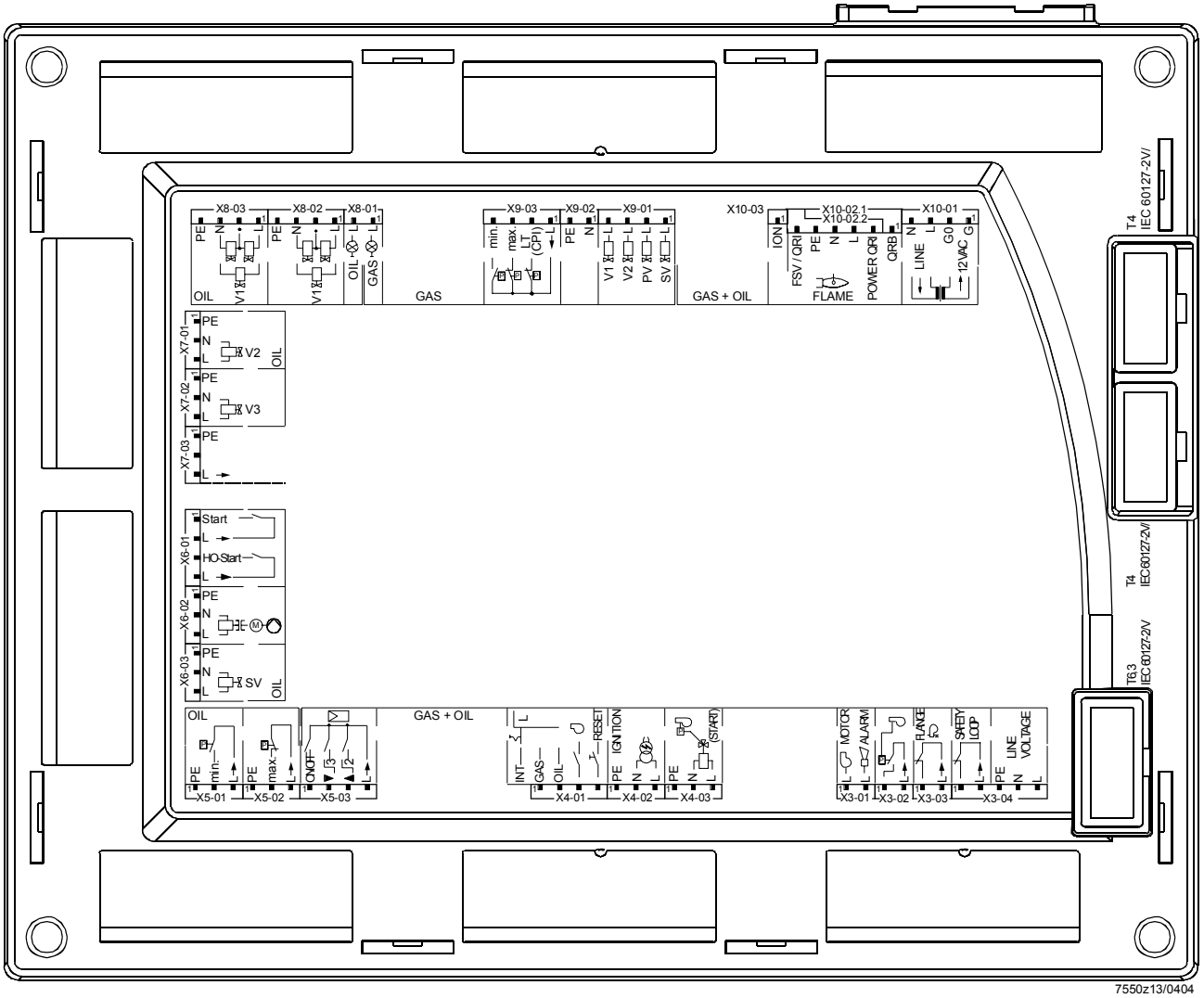

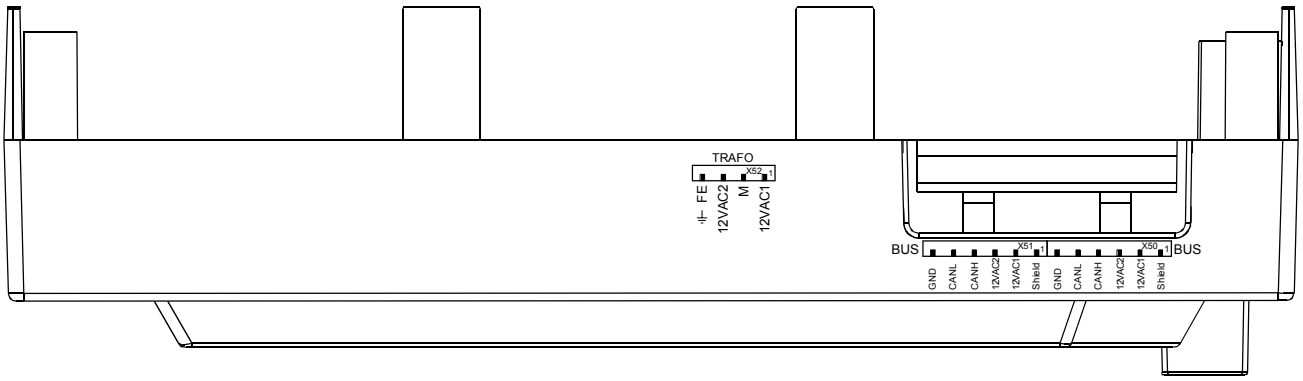

9.3 Connection terminals LMV51.140x1

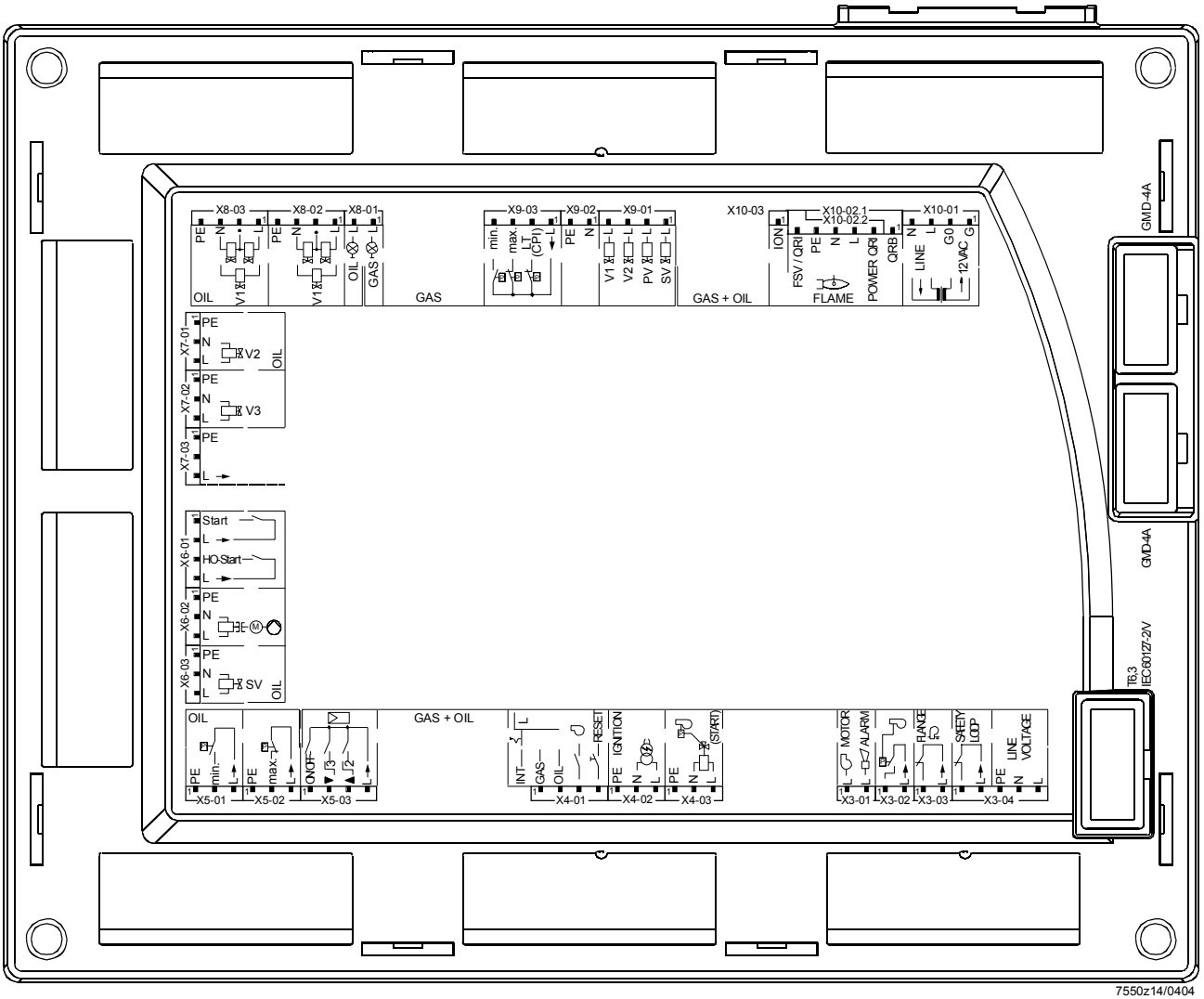

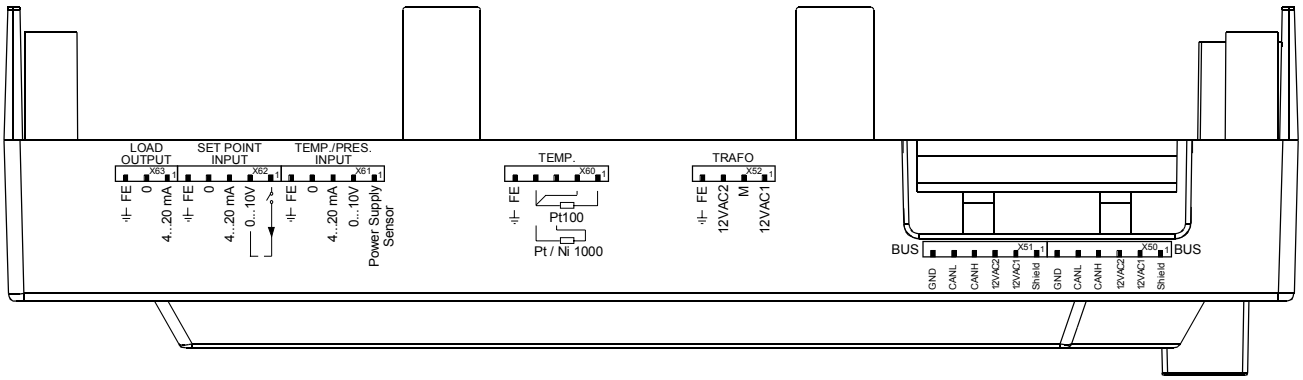

9.4 Connection terminals LMV51.100x1 / LMV51.100x2 / LMV51.140x2

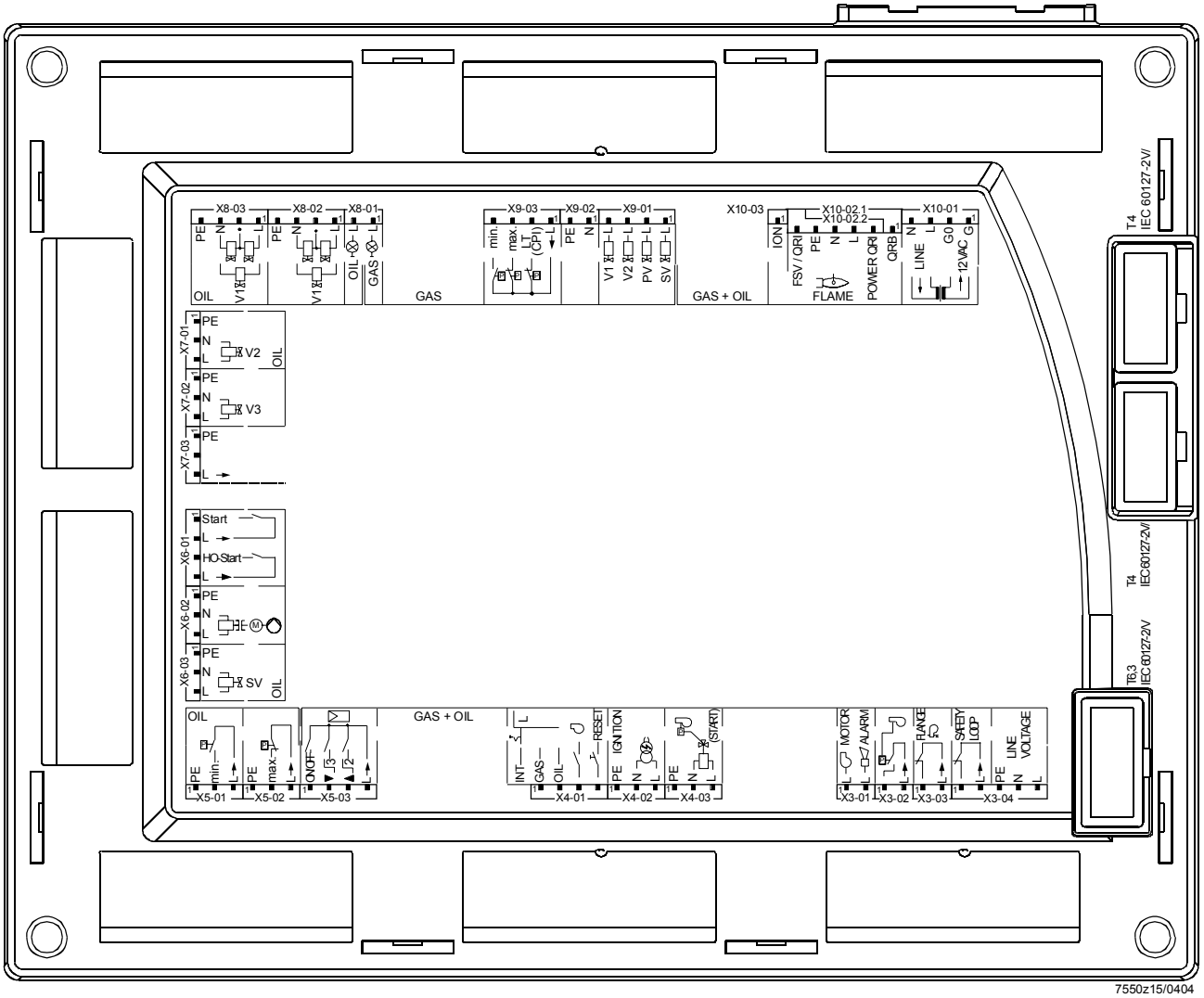

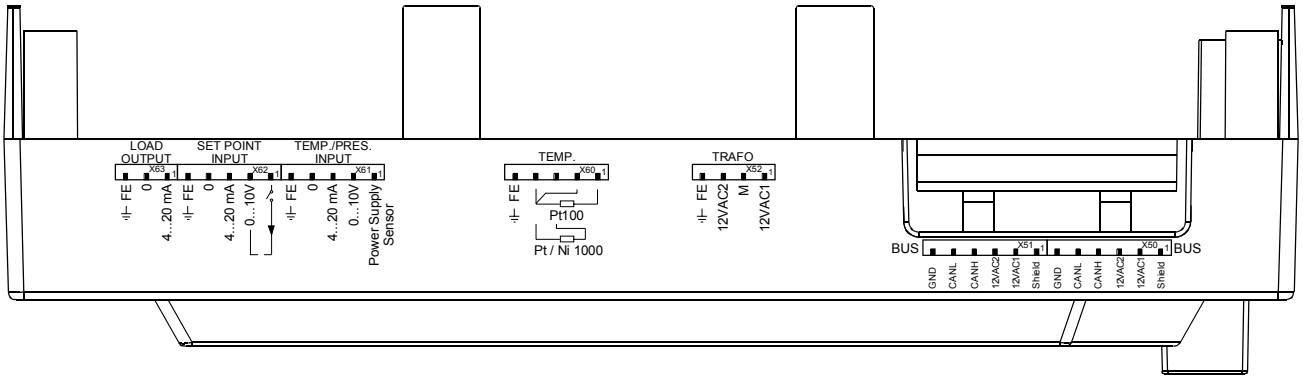

9.5 Connection terminals LMV51.200x1 / LMV51.200x2

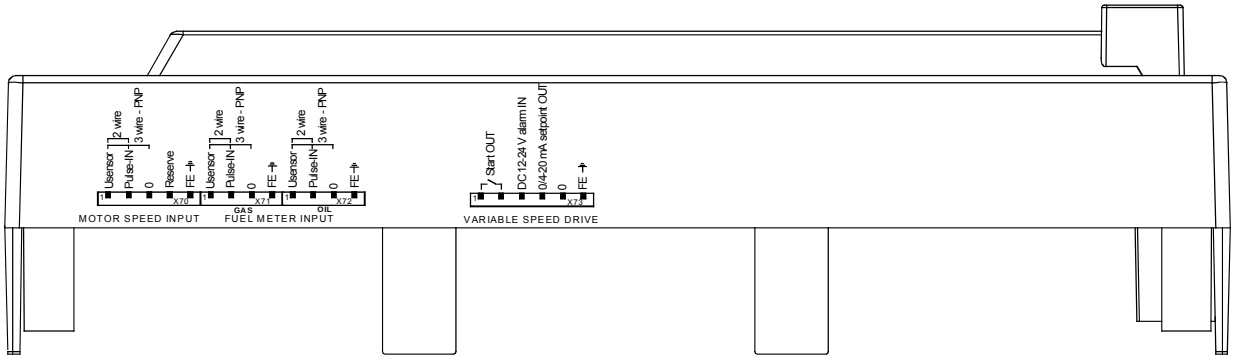

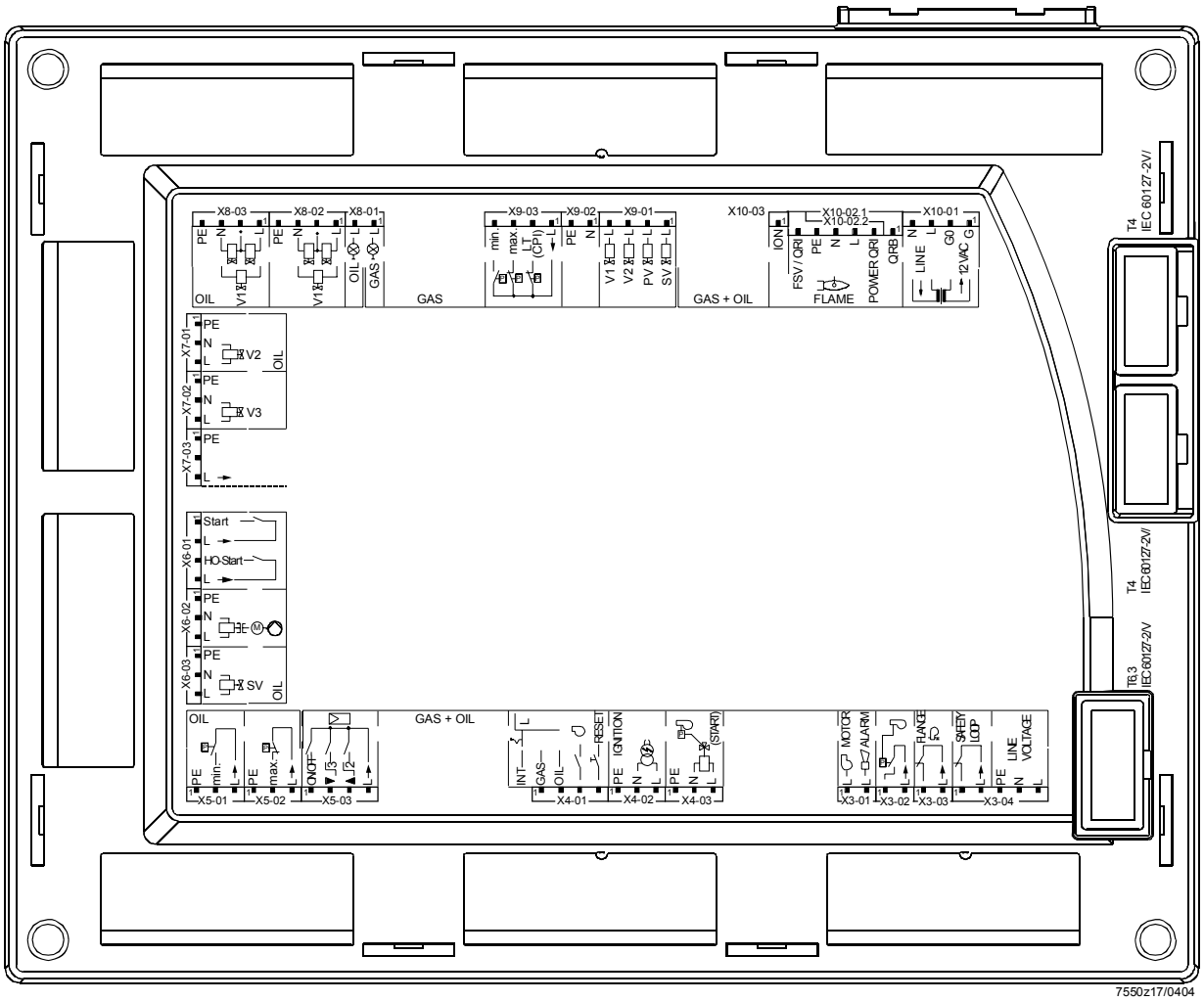

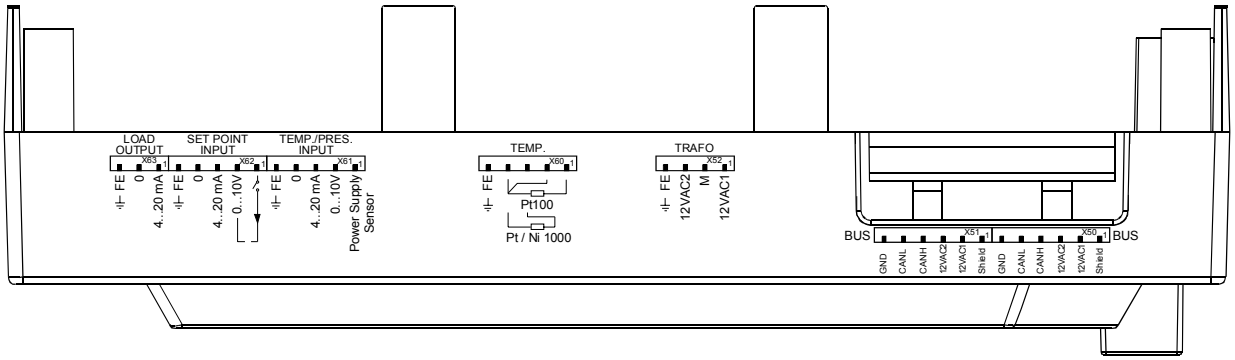

9.6 Connection terminals L LMV51.300B1 / LMV51.300B2 / LMV52.200B1 / LMV52.200B2 / LMV52.240B2

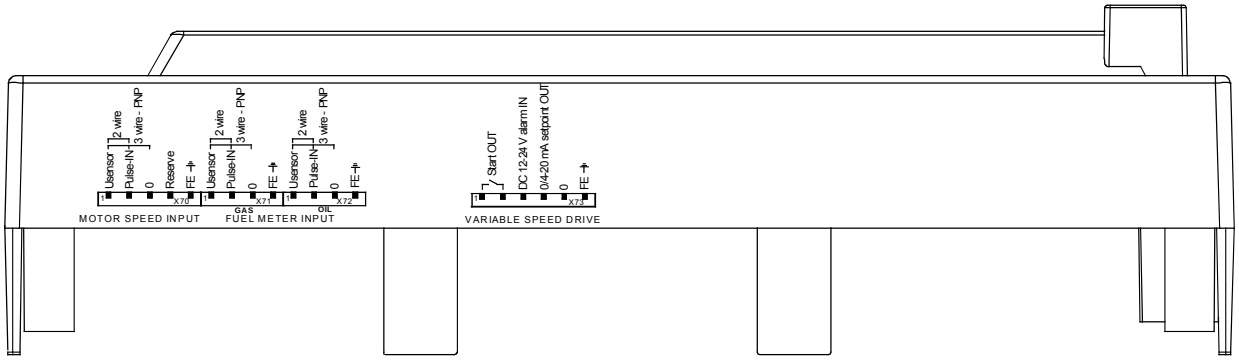

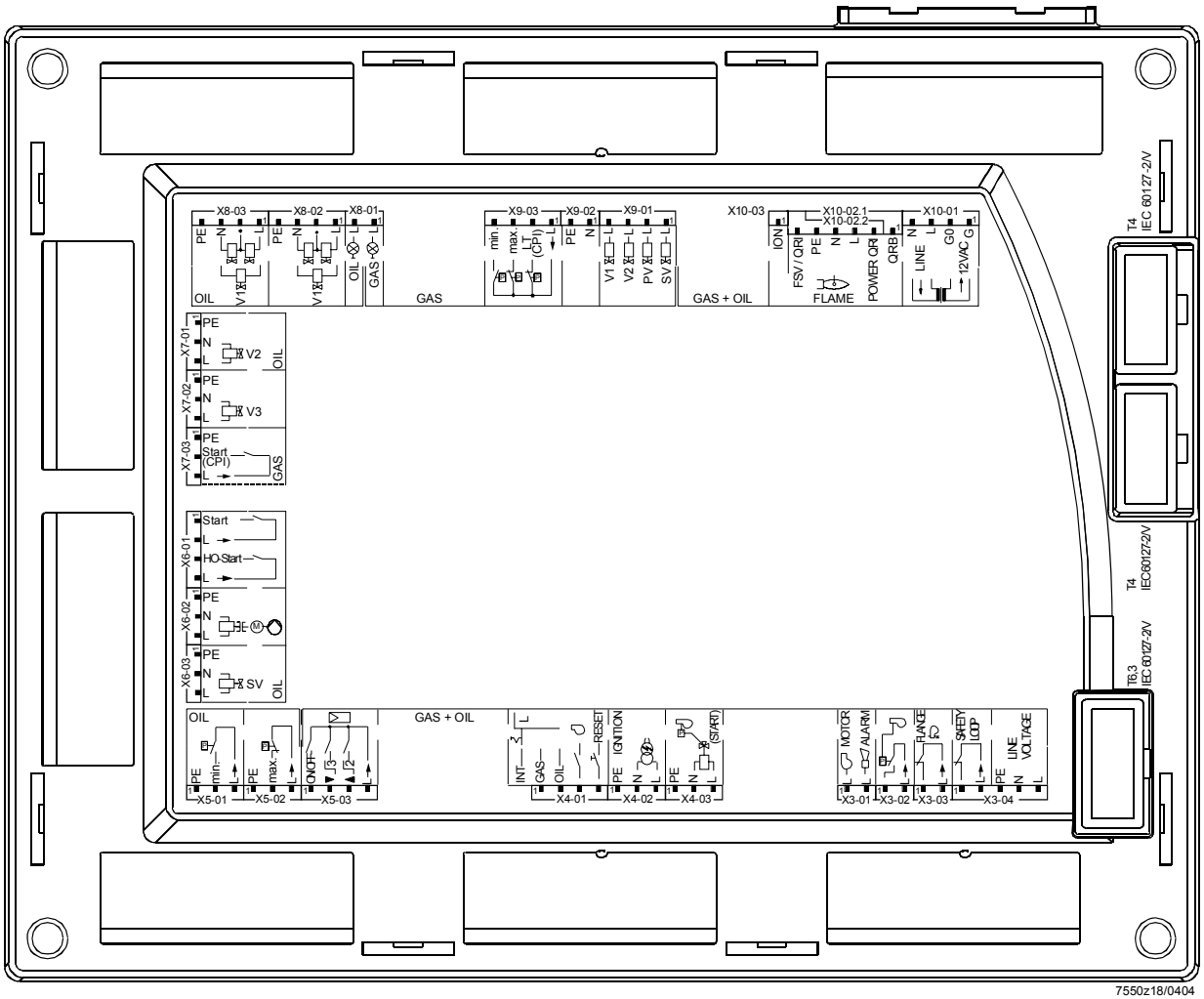

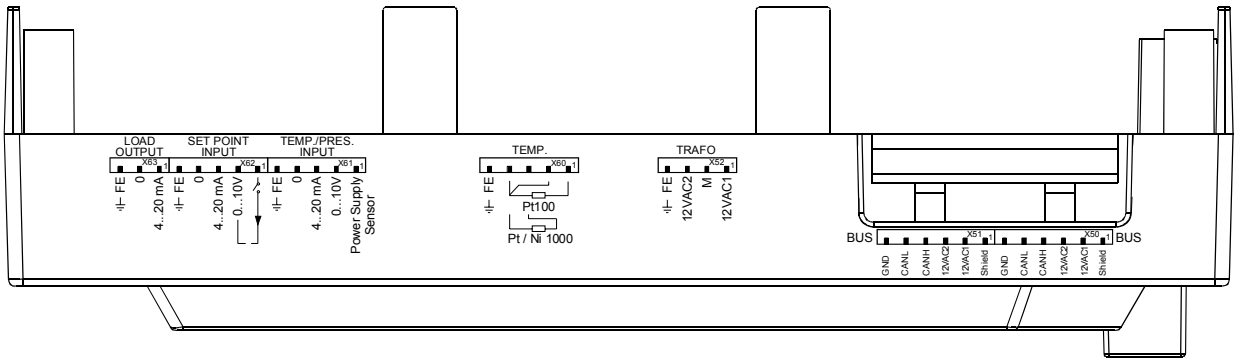

9.7 Connection terminals LMV51.340B1 / LMV52.240B1

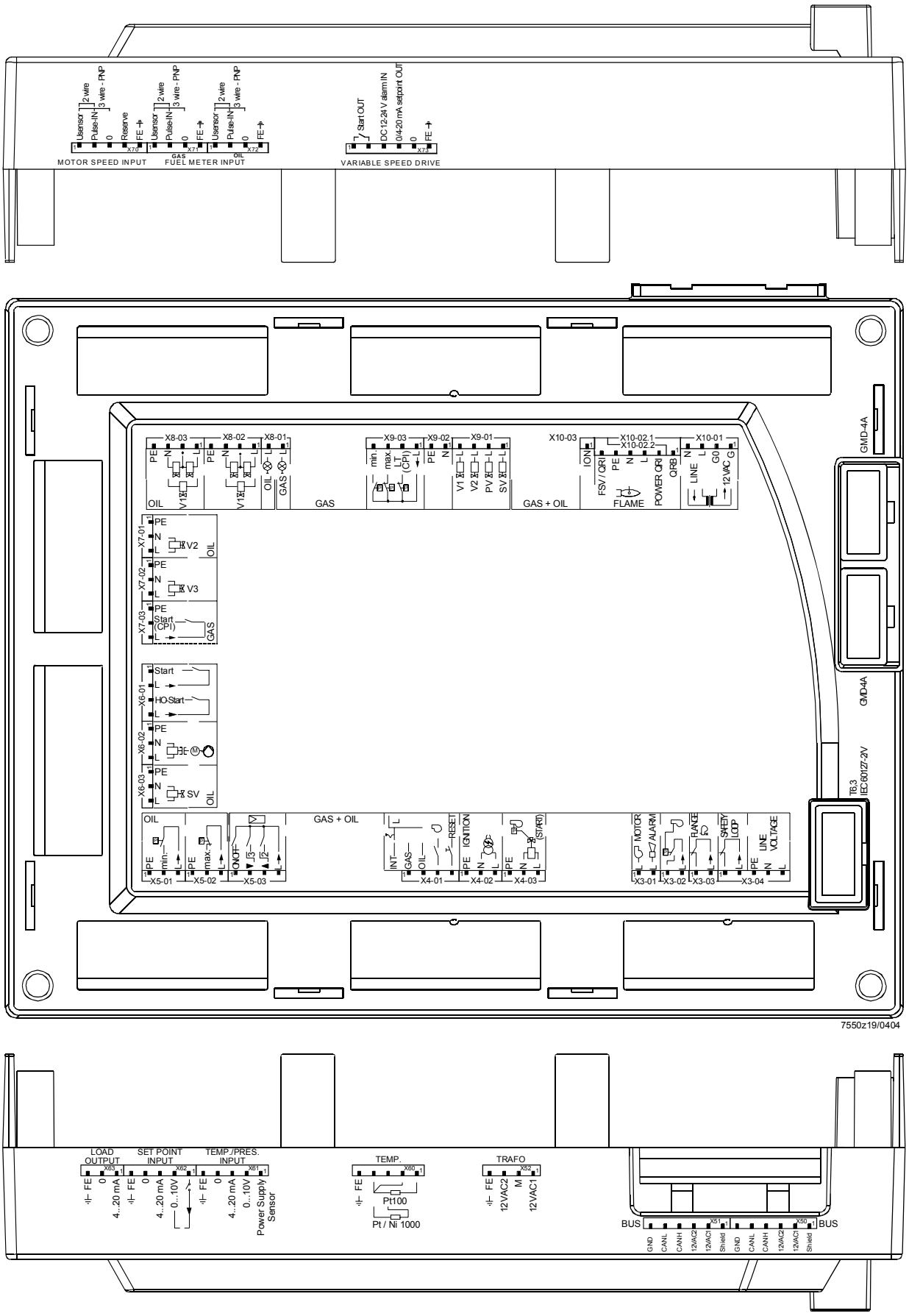

9.8 Coding of connectors

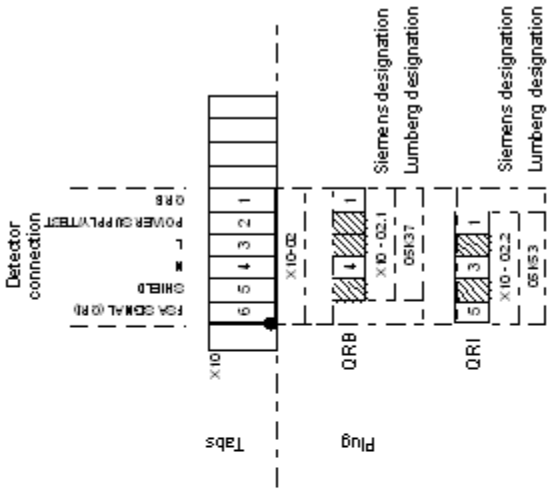

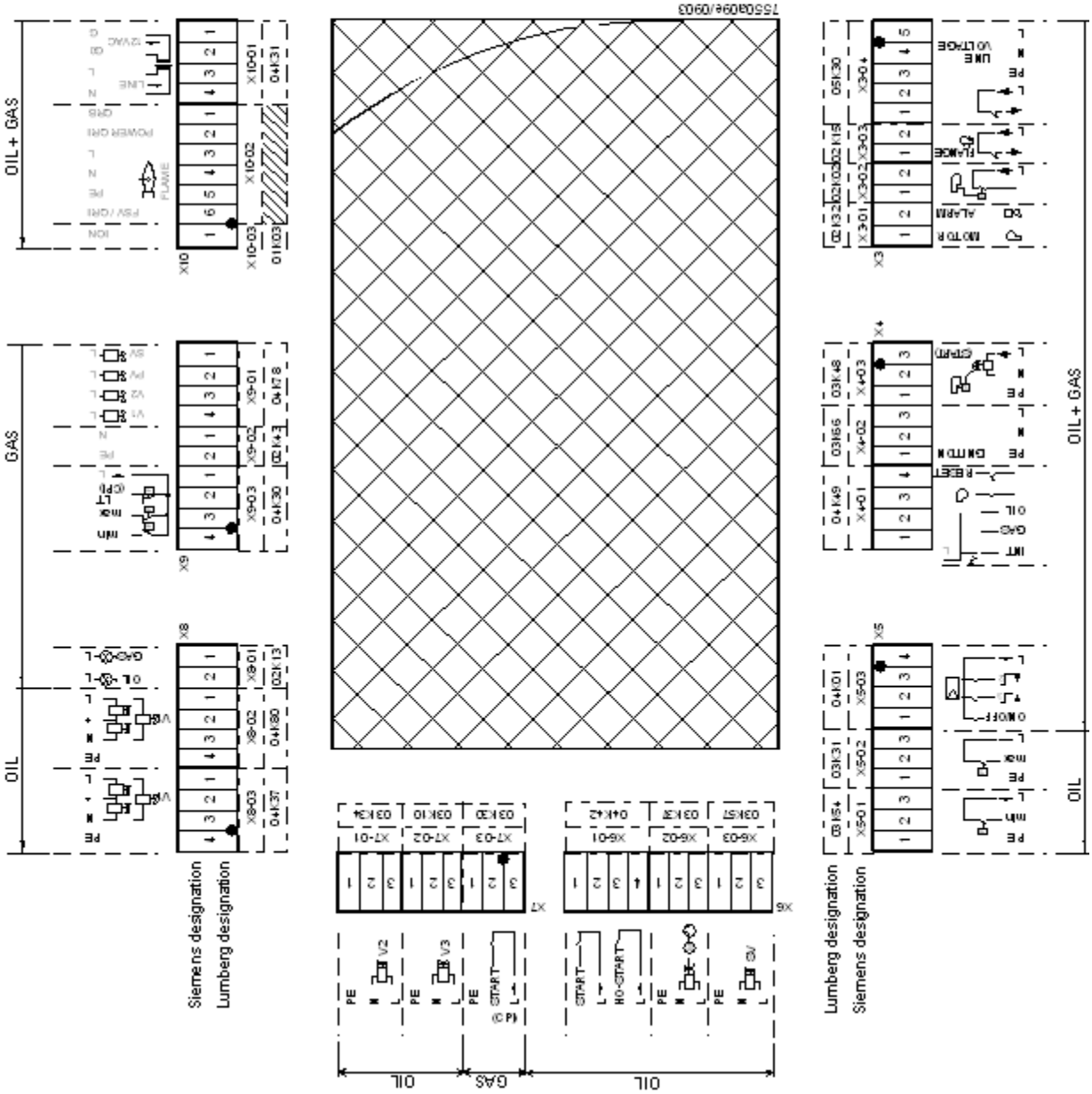

AGG5.720 Standard connector set LMV51... for gas / oil applications with up to 3 actuators.
Standard connector set LMV52... for gas / oil applications with up to 3 actuators.

LMV5...	Terminal designation	Description
		RAST5
1	X3-01	Alarm, fan
1	X3-02	Air pressure switch (APS)
1	X3-03	Burner flange
1	X3-04	Power supply safety loop
1	X4-01	Fuel selection, lockout reset, fan contactor contact or pressure switch for flue gas recirculation
1	X4-02	Ignition
1	X4-03	Start signal / pressure switch relieve valve
1	X5-01	Oil pressure switch min.
1	X5-02	Oil pressure switch max.
1	X5-03	Load controller external
1	X6-01	Direct heavy oil start
1	X6-02	Magnetic clutch / oil pump
1	X6-03	Safety valve shutoff valve (oil)
1	X7-01	Fuel valve 2-oil
1	X7-02	Fuel valve 3-oil
1	X7-03	Not used
1	X8-01	Firing on gas / oil
1	X8-02	Fuel valve 1-oil
1	X8-03	Fuel valve 1-oil
1	X9-01	Gas valves
1	X9-02	Protective earth, neutral conductor
1	X9-03	Gas pressure switch min., max., valve proving or valve closing contact
1	X10-01	Power transformer (prim I, sec I)
1	X10-02.2	Infrared flame detector QRI... / flame detector QRA7...
5	[/]	Plug
1	X10-03	Ionization probe ION
		Transformer
1	prim I	Power supply
1	sec I	AC 12 V
1	sec II	AC1 / AC2 12 V
		RAST3.5
2	X50, X51	CAN bus (6-pole)
1	X52	Transformer, secondary side (4-pole, low-voltage)
1	X60	Inputs 1 and 4 - temperature sensor (5 pins), TEMP.
1	X61	Input 2 - pressure input - temperature limiter (5 pins) TEMP. / PRESS. INPUT
1	X62	Input 3, analog input (5 pins), SET POINT INPUT
1	X63	Load output (3 pins), LOAD OUTPUT
6	[/]	CAN bus actuator (5 pins)

AGG5.721

Extension connector set LMV5... (in addition to AGG5.720, covering all connector variants).

LMV5...	Terminal designation	Description
		RAST3.5
2	[/]	Actuator (5 pins)
		VSD
2	[/]	4-pin connector 2 x
1	[/]	5-pin connector 1 x
1	[/]	6-pin connector 1 x
		RAST5
		Transformer
1	prim I	Power supply
1	sec II	AC1 / AC2 12 V
1	X10-02.1	Photoresistive detector QRB...

10 Description of connection terminals (AC 120 V)

Terminal designa-tion	Connection symbol		Input	Output	Description of connection terminals	Electrical rating
X3-01	PIN1	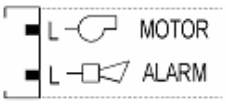		x	Fan motor contactor	AC 120 V +10 % / -15 %, 50...60 Hz, 1 A, (pilot duty), cosφ 0.4
	PIN2			x	Alarm	AC 120 V +10 % / -15 %, 50...60 Hz, 1 A, (pilot duty), cosφ 0.4
X3-02	PIN1	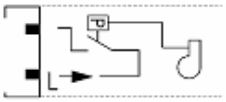	x		Air pressure switch (LP)	AC 120 V +10 % / -15 %, 50...60 Hz, Imax 1.5 mA
	PIN2			x	Power signal for air pressure switch (LP)	AC 120 V +10 % / -15 %, 50...60 Hz, Imax 500 mA
X3-03	PIN1	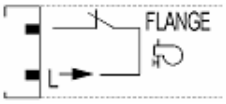	x		End switch burner flange	AC 120 V +10 % / -15 %, 50...60 Hz, Imax 5 A
	PIN2			x	Power signal for end switch burner flange	AC 120 V +10 % / -15 %, 50...60 Hz, Imax 5 A
X3-04	PIN1	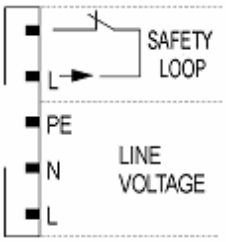	x		Safety loop	AC 120 V +10 % / -15 %, 50...60 Hz, Imax 5 A
	PIN2			x	Power signal for safety loop	AC 120 V +10 % / -15 %, 50...60 Hz, Imax 5 A
	PIN3		x		Protective earth (PE)	
	PIN4		x		Power supply neutral conductor (N)	
	PIN5		x		Power supply live conductor (L)	AC 120 V +10 % / -15 %, 50...60 Hz, fuse 6.3 AT (DIN EN 60 127 2 / 5)
X4-01		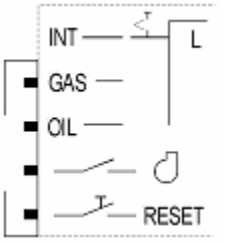			Fuel selection “internal” if pin 1-2 is not used	
	PIN1		x		Fuel selection gas	AC 120 V +10 % / -15 %, 50...60 Hz, Imax 1.5 mA
	PIN2		x		Fuel selection oil	AC 120 V +10 % / -15 %, 50...60 Hz, Imax 1.5 mA
	PIN3		x		Fan contactor contact (FCC) or flue gas recirculation -pressure switch	AC 120 V +10 % / -15 %, 50...60 Hz, Imax 1.5 mA
	PIN4		x		Reset / manual lockout	AC 120 V +10 % / -15 %, 50...60 Hz, Imax 1.5 mA
X4-02	PIN1	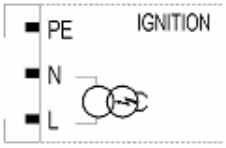		x	Protective earth (PE)	
	PIN2			x	Neutral conductor (N)	
	PIN3			x	Ignition	AC 120 V +10 % / -15 %, 50...60 Hz, 1.6 A, (pilot duty), cosφ 0.2
X4-03	PIN1	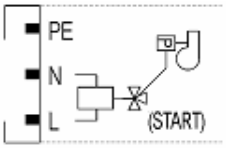		x	Protective earth (PE)	
	PIN2			x	Neutral conductor (N)	
	PIN3			x	Start signal or pressure switch relief (air pressure switch test valve)	AC 120 V +10 % / -15 %, 50...60 Hz, 75 VA, (pilot duty), cosφ 0.4

Description of connection terminals (cont'd)

Terminal designation		Connection symbol	Input	Output	Description of connection terminals	Electrical rating
X5-01	PIN1	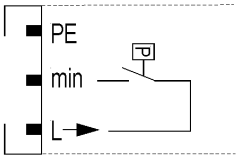		x	Protective earth (PE)	
	PIN2		x		Pressure switch min-oil (DWmin-oil)	AC 120 V +10 % / -15 %, 50...60 Hz, Imax 1.5 mA
	PIN3			x	Power signal for pressure switch-min-oil (DWmin-oil)	AC 120 V +10 % / -15 %, 50...60 Hz, Imax 500 mA
X5-02	PIN1	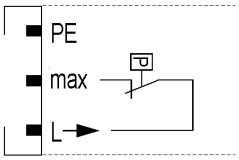		x	Protective earth (PE)	
	PIN2		x		Pressure switch-max-oil (DWmax-oil)	AC 120 V +10 % / -15 %, 50...60 Hz, Imax 1.5 mA
	PIN3			x	Power signal for pressure switch-max-oil (DWmax-oil)	AC 120 V +10 % / -15 %, 50...60 Hz, Imax 500 mA
X5-03	PIN1	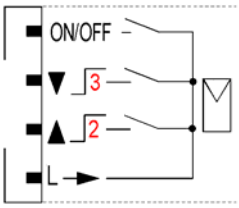	x		Controller (ON / OFF)	AC 120 V +10 % / -15 %, 50...60 Hz, Imax 1.5 mA
	PIN2		x		Controller closes / stage 3	AC 120 V +10 % / -15 %, 50...60 Hz, Imax 1.5 mA
	PIN3		x		Controller opens / stage 2	AC 120 V +10 % / -15 %, 50...60 Hz, Imax 1.5 mA
	PIN4			x	Power signal for control of controller	AC 120 V +10 % / -15 %, 50...60 Hz, Imax 500 mA
X6-01	PIN1	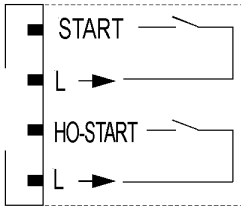	x		Start release oil	AC 120 V +10 % / -15 %, 50...60 Hz, Imax 1.5 mA
	PIN2			x	Power signal start release oil	AC 120 V +10 % / -15 %, 50...60 Hz, Imax 500 mA
	PIN3		x		Direct heavy oil start	AC 120 V +10 % / -15 %, 50...60 Hz, Imax 1.5 mA
	PIN4			x	Power signal direct heavy oil start	AC 120 V +10 % / -15 %, 50...60 Hz, Imax 500 mA
X6-02	PIN1	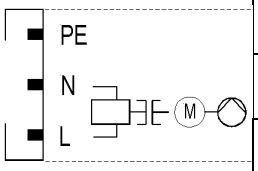		x	Protective earth (PE)	
	PIN2			x	Neutral conductor (N)	
	PIN3			x	Oil pump / magnetic coupling	AC 120 V +10 % / -15 %, 50...60 Hz, 1.6 A, (pilot duty), cosφ 0.4
X6-03	PIN1	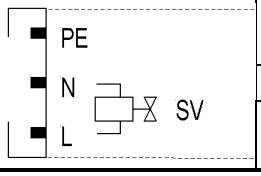		x	Protective earth (PE)	
	PIN2			x	Neutral conductor (N)	
	PIN3				Fuel valve (shutoff valve-oil)	AC 120 V +10 % / -15 %, 50...60 Hz, 1.6 A, (pilot duty), cosφ 0.4

Description of connection terminals (cont'd)

Terminal designation	Connection symbol		Input	Output	Description of connection terminals	Electrical rating
X7-01	PIN1	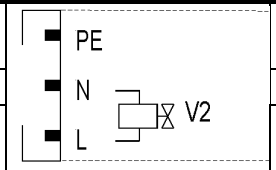		x	Protective earth (PE)	
	PIN2			x	Neutral conductor (N)	
	PIN3				Fuel valve 2 (oil)	AC 120 V +10 % / -15 %, 50...60 Hz, 1.6 A, (pilot duty), cosφ 0.4
X7-02	PIN1	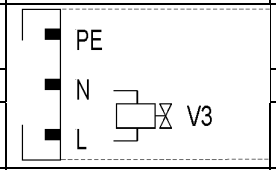		x	Protective earth (PE)	
	PIN2			x	Neutral conductor (N)	
	PIN3				Fuel valve 3 (oil)	AC 120 V +10 % / -15 %, 50...60 Hz, 1.6 A, (pilot duty), cosφ 0.4
X7-03	PIN1	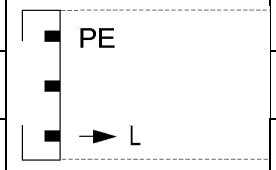		x	Protective earth (PE)	
	PIN2		x		Start release gas CPL (LMV52...)	AC 120 V +10 % / -15 %, 50...60 Hz, Imax 1.6 mA
	PIN3			x	Power signal (reserve)	AC 120 V +10 % / -15 %, 50...60 Hz, Imax 500 mA

Description of connection terminals (cont'd)

Terminal designation	Connection symbol		Input	Output	Description of connection terminals	Electrical rating
X8-01	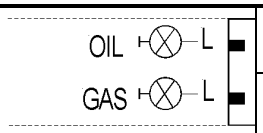	PIN2		x	Firing on oil	AC 120 V +10 % / -15 %, 50...60 Hz, 1 A, cosφ 0.4
		PIN1		x	Firing on gas	AC 120 V +10 % / -15 %, 50...60 Hz, 1 A, cosφ 0.4
X8-02	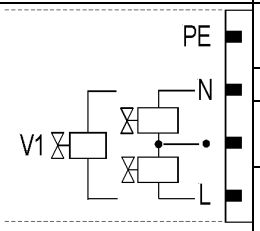	PIN4		x	Protective earth (PE)	
		PIN3		x	Neutral conductor (N)	
		PIN2		x	Wiring point for valves connected in series	
		PIN1		x	Fuel valve 1 (oil)	AC 120 V +10 % / -15 %, 50...60 Hz, 1.6 A, (pilot duty), cosφ 0.4
X8-03	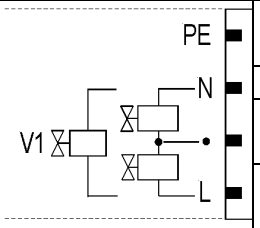	PIN4		x	Protective earth (PE)	
		PIN3		x	Neutral conductor (N)	
		PIN2		x	Wiring point for valves connected in series	
		PIN1		x	Fuel valve 1 (oil)	AC 120 V +10 % / -15 %, 50...60 Hz, 1.6 A, (pilot duty), cosφ 0.4
X9-01	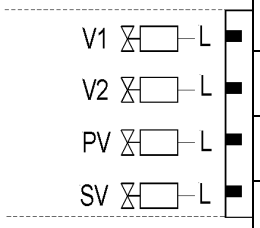	PIN4		x	Fuel valve 1 (gas)	AC 120 V +10 % / -15 %, 50...60 Hz, 1.6 A, (pilot duty), cosφ 0.4
		PIN3		x	Fuel valve 2 (gas)	AC 120 V +10 % / -15 %, 50...60 Hz, 1.6 A, (pilot duty), cosφ 0.4
		PIN2		x	Fuel valve (gas)	AC 120 V +10 % / -15 %, 50...60 Hz, 1.6 A, (pilot duty), cosφ 0.4
		PIN1		x	Fuel valve (shutoff valve-gas)	AC 120 V +10 % / -15 %, 50...60 Hz, 1.6 A, (pilot duty), cosφ 0.4
X9-02		PIN2		x	Protective earth (PE)	
		PIN1		x	Neutral conductor (N)	
X9-03	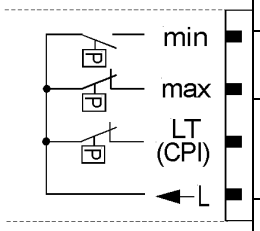	PIN4	x		Pressure switch-min-gas (DWmin-gas, start release gas	AC 120 V +10 % / -15 %, 50...60 Hz, Imax 1.5 mA
		PIN3	x		Pressure switch-max-gas (DWmax-gas)	AC 120 V +10 % / -15 %, 50...60 Hz, Imax 1.5 mA
		PIN2	x		Pressure switch-valve proving-gas / leakage test or valve closing contact (CPI)	AC 120 V +10 % / -15 %, 50...60 Hz, Imax 1.5 mA
		PIN1		x	Power signal for pressure switch	AC 120 V +10 % / -15 %, 50...60 Hz, Imax 500 mA

Description of connection terminals (cont'd)

Terminal designation	Connection symbol		Input	Output	Description of connection terminals	Electrical rating
X10-01	LINE N L G0 12VAC G	PIN4		x	Neutral conductor (N)	AC 120 V +10 % / -15 %, 50...60 Hz, max 1 mA
		PIN3		x	Power signal transformer	
		PIN2	x		AC power signal GO	AC 12 V +10 % / -15 %, 50...60 Hz, max 1.2 mA
		PIN1	x		AC power signal fan motor (G)	
X10-02	FSV / QRI	PIN6	x		QRI... (IR detector) / QRA7... signal voltage	Umax DC 5 V
	PE	PIN5		x	Protective earth (PE)	
	FLAME N	PIN4		x	Neutral conductor (N)	
	L	PIN3		x	Power signal	AC 120 V +10 % / -15 %, 50...60 Hz, Imax 500 mA
	POWER QRI	PIN2		x	QRI... (IR detector) / QRA7... power supply	DC 14 / 21 VC Imax 100 mA
	QRB	PIN1	x		QRB... signal voltage	Max. DC 8 V
X10-03	ION	PIN1		x	Ionization probe (ION) (alternatively QRA2…/ QRA4.U/QRA10…, *refer to section Description of inputs and outputs)*	Umax (X3-04-PINS) Imax. 0.5 mA
X50	GND	PIN6		x	Reference ground (PELV)	
	CANL	PIN5		x	Communication signal (CANL)	DC U ← 5 V, Rw = 120 Ω, level to ISO-DIS 11898
	CANH	PIN4		x	Communication signal (CANH)	
	12VAC2	PIN3		x	AC power supply for actuators / display and operating unit AZL5...	AC 12 V +10 % / -15 %, 50...60 Hz, Fuse max. 4 A
	12VAC1	PIN2		x		
	Shield	PIN1		x	Shield connection (functional earth)	
X51	GND	PIN6		x	Reference ground (PELV)	
	CANL	PIN5		x	Communication signal (CANL)	DC U ← 5 V, Rw = 120 Ω, level to ISO-DIS 11898
	CANH	PIN4		x	Communication signal (CANH)	
	12VAC2	PIN3		x	AC power supply for actuators / display and operating unit AZL5...	AC 12 V +10 % / -15 %, 50...60 Hz, Fuse max. 4 A
	12VAC1	PIN2		x		
	Shield	PIN1		x	Shield connection (functional earth)	
X52	FE	PIN4	x		Functional earth	
	12VAC2	PIN3	x		AC power supply from transformer to LMV5... system	AC 12 V +10 % / -15 %, 50...60 Hz
	M	PIN2	x		Reference ground (PELV)	
	12VAC1	PIN1	x		AC power supply from transformer to LMV5... system	AC 12 V +10 % / -15 %, 50...60 Hz

Description of connection terminals (cont'd)

Terminal designation	Connection symbol		Input	Output	Description of connection terminals	Electrical rating
Temperature / pressure controller						
X60	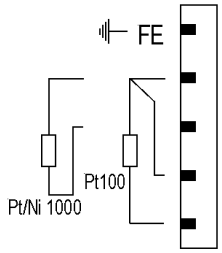	PIN5	x		Functional earth for shield connection	
		PIN4	x		Reference ground	
		PIN3	x		Temperature sensor input Pt / LG-Ni 1000 (Input 4, TEMP)	
		PIN2	x		Line compensation temperature sensor PT100	
		PIN1	x		Temperature sensor input PT100 (input 1, TEMP)	
X61	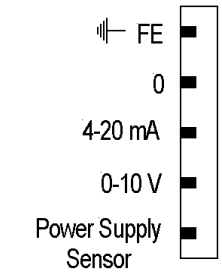	PIN5	x		Functional earth for shield connection	
		PIN4	x		Reference ground	
		PIN3	x		Current input for temperature / pressure signal (input 2, TEMP / PRESS INPUT 4...20 mA)	DC 0...20 mA
		PIN2	x		Voltage input for temperature / pressure signal (input 2, TEMP / PRESS INPUT DC 0...10 V	DC 0...10 V
		PIN1		x	Power supply for temperature / pressure transmitter	approx. DC 20 V Max. 25 mA
X62	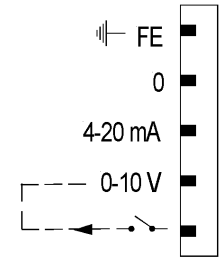	PIN5	x		Functional earth for shield connection	
		PIN4	x		Reference ground	
		PIN3	x		Current input for setpoint or load (input 3, SETPOINT INPUT)	DC 0...20 mA
		PIN2	x		Voltage input for setpoint or load (input 3, SETPOINT INPUT)	DC 0...10 V
		PIN1		x	Power supply for setpoint changeover	approx. DC 24 V Max. 2 mA
Temperature / pressure controller						
X63	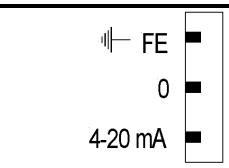	PIN3	x		Functional earth for shield connection	
		PIN2		x	Reference ground	
		PIN1		x	Current output for burner load (LOAD OUTPUT)	DC 4...20 mA, RLmax = 500 Ω

11 Description of connection terminals (AC 230 V)

Terminal designation	Connection symbol		Input	Output	Description of connection terminals	Electrical rating
X3-01	PIN1	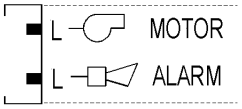		x	Fan motor contactor	AC 230 V +10 % / -15 %, 50...60 Hz, 1 A, cosφ 0.4
	PIN2			x	Alarm	AC 230 V +10 % / -15 %, 50...60 Hz, 1 A, cosφ 0.4
X3-02	PIN1	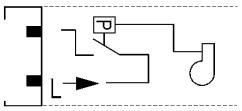	x		Air pressure switch (LP)	AC 230 V +10 % / -15 %, 50...60 Hz, Imax 1.5 mA
	PIN2			x	Power signal for air pressure switch (LP)	AC 230 V +10 % / -15 %, 50...60 Hz, Imax 500 mA
X3-03	PIN1	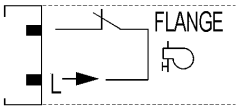	x		End switch burner flange	AC 230 V +10 % / -15 %, 50...60 Hz, Imax 5 A
	PIN2			x	Power signal for end switch burner flange	AC 230 V +10 % / -15 %, 50...60 Hz, Imax 5 A
X3-04	PIN1	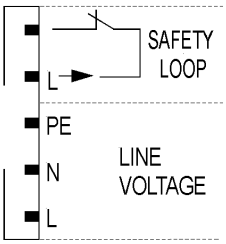	x		Safety loop	AC 230 V +10 % / -15 %, 50...60 Hz, Imax 5 A
	PIN2			x	Power signal for safety loop	AC 230 V +10 % / -15 %, 50...60 Hz, Imax 5 A
	PIN3		x		Protective earth (PE)	
	PIN4		x		Supply voltage neutral conductor (N)	
	PIN5		x		Supply voltage live conductor (L)	AC 230 V +10 % / -15 %, 50...60 Hz, fuse 6.3 AT (DIN EN 60 127 2 / 5)
X4-01		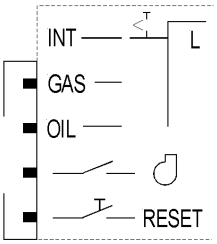			Fuel selection “internal” if pin 1-2 is not used	
	PIN1		x		Fuel selection gas	AC 230 V +10 % / -15 %, 50...60 Hz, Imax 1.5 mA
	PIN2		x		Fuel selection oil	AC 230 V +10 % / -15 %, 50...60 Hz, Imax 1.5 mA
	PIN3		x		Fan contactor contact (FCC) or flue gas recirculation -pressure switch	AC 230 V +10 % / -15 %, 50...60 Hz, Imax 1.5 mA
	PIN4		x		Reset / manual lockout	AC 230 V +10 % / -15 %, 50...60 Hz, Imax 1.5 mA
X4-02	PIN1	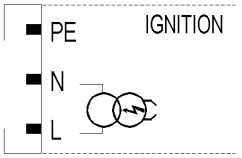		x	Protective earth (PE)	
	PIN2			x	Neutral conductor (N)	
	PIN3			x	Ignition	AC 230 V +10 % / -15 %, 50...60 Hz, 2 A, cosφ 0.2
X4-03	PIN1	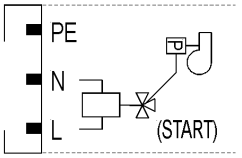		x	Protective earth (PE)	
	PIN2			x	Neutral conductor (N)	
	PIN3			x	Start signal or pressure switch relief (air pressure switch test valve)	AC 230 V +10 % / -15 %, 50...60 Hz, 0.5 A, cosφ 0.4

Description of connection terminals (cont'd)

Terminal designa-tion	Connection symbol		Input	Output	Description of connection terminals	Electrical rating
X5-01	PIN1	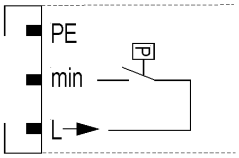		x	Protective earth (PE)	
	PIN2		x		Pressure switch min-oil (DWmin-oil)	AC 230 V +10 % / -15 %, 50...60 Hz, Imax 1.5 mA
	PIN3			x	Power signal for pressure switch-min-oil (DWmin-oil)	AC 230 V +10 % / -15 %, 50...60 Hz, Imax 500 mA
X5-02	PIN1	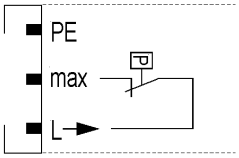		x	Protective earth (PE)	
	PIN2		x		Pressure switch-max-oil (DWmax-oil)	AC 230 V +10 % / -15 %, 50...60 Hz, Imax 1.5 mA
	PIN3			x	Power signal for pressure switch-max-oil (DWmax-oil)	AC 230 V +10 % / -15 %, 50...60 Hz, Imax 500 mA
X5-03	PIN1	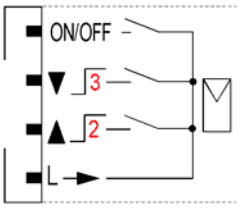	x		Controller (ON / OFF)	AC 230 V +10 % / -15 %, 50...60 Hz, Imax 1.5 mA
	PIN2		x		Controller closes / stage 3	AC 230 V +10 % / -15 %, 50...60 Hz, Imax 1.5 mA
	PIN3		x		Controller opens / stage 2	AC 230 V +10 % / -15 %, 50...60 Hz, Imax 1.5 mA
	PIN4			x	Power signal for control of controller	AC 230 V +10 % / -15 %, 50...60 Hz, Imax 500 mA
X6-01	PIN1	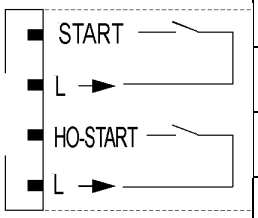	x		Start release oil	AC 230 V +10 % / -15 %, 50...60 Hz, Imax 1.5 mA
	PIN2			x	Power signal start release oil	AC 230 V +10 % / -15 %, 50...60 Hz, Imax 500 mA
	PIN3		x		Direct heavy oil start	AC 230 V +10 % / -15 %, 50...60 Hz, Imax 1.5 mA
	PIN4			x	Power signal direct heavy oil start	AC 230 V +10 % / -15 %, 50...60 Hz, Imax 500 mA
X6-02	PIN1	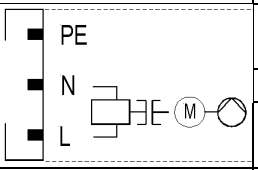		x	Protective earth (PE)	
	PIN2			x	Neutral conductor (N)	
	PIN3			x	Oil pump / magnetic coupling	AC 230 V +10 % / -15 %, 50...60 Hz, 2 A, cosφ 0.4
X6-03	PIN1	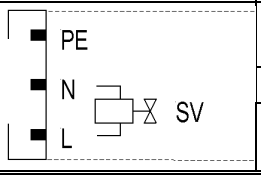		x	Protective earth (PE)	
	PIN2			x	Neutral conductor (N)	
	PIN3				Fuel valve (shutoff valve-oil)	AC 230 V +10 % / -15 %, 50...60 Hz, 1 A, cosφ 0.4

Description of connection terminals (cont'd)

Terminal designation	Connection symbol		Input	Output	Description of connection terminals	Electrical rating
X7-01	PIN1	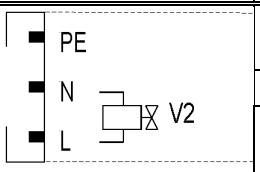		x	Protective earth (PE)	
	PIN2			x	Neutral conductor (N)	
	PIN3				Fuel valve 2 (oil)	AC 230 V +10 % / -15 %, 50...60 Hz, 1 A, cosφ 0.4
X7-02	PIN1	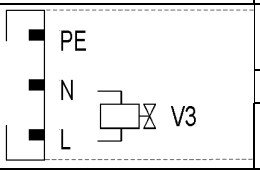		x	Protective earth (PE)	
	PIN2			x	Neutral conductor (N)	
	PIN3				Fuel valve 3 (oil)	AC 230 V +10 % / -15 %, 50...60 Hz, 1 A, cosφ 0.4
X7-03	PIN1	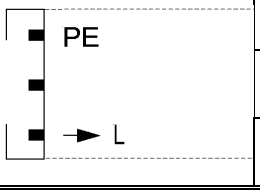		x	Protective earth (PE)	
	PIN2		x		Start release gas CPL (LMV52...)	AC 230 V +10 % / -15 %, 50...60 Hz, Imax 1.5 mA
	PIN3			x	Power signal (reserve)	AC 230 V +10 % / -15 %, 50...60 Hz, Imax 500 mA

Description of connection terminals (cont'd)

Terminal designation	Connection symbol		Input	Output	Description of connection terminals	Electrical rating
X8-01	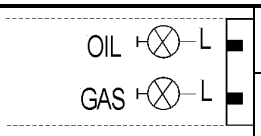	PIN2		x	Firing on oil	AC 230 V +10 % / -15 %, 50...60 Hz, 1 A, cosφ 0.4
		PIN1		x	Firing on gas	AC 230 V +10 % / -15 %, 50...60 Hz, 1 A, cosφ 0.4
X8-02	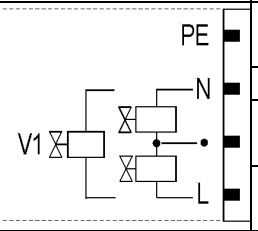	PIN4		x	Protective earth (PE)	
		PIN3		x	Neutral conductor (N)	
		PIN2		x	Wiring point for valves connected in series	
		PIN1		x	Fuel valve 1 (oil)	AC 230 V +10 % / -15 %, 50...60 Hz, 1 A, cosφ 0.4
X8-03	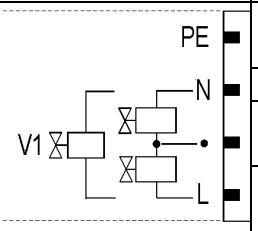	PIN4		x	Protective earth (PE)	
		PIN3		x	Neutral conductor (N)	
		PIN2		x	Wiring point for valves connected in series	
		PIN1		x	Fuel valve 1 (oil)	AC 230 V +10 % / -15 %, 50...60 Hz, 1 A, cosφ 0.4
X9-01	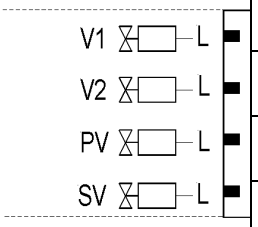	PIN4		x	Fuel valve 1 (gas)	AC 230 V +10 % / -15 %, 50...60 Hz, 2 A, cosφ 0.4
		PIN3		x	Fuel valve 2 (gas)	AC 230 V +10 % / -15 %, 50...60 Hz, 2 A, cosφ 0.4
		PIN2		x	Fuel valve (gas)	AC 230 V +10 % / -15 %, 50...60 Hz, 2 A, cosφ 0.4
		PIN1		x	Fuel valve (shutoff valve-(gas)	AC 230 V +10 % / -15 %, 50...60 Hz, 2 A, cosφ 0.4
X9-02		PIN2		x	Protective earth (PE)	
		PIN1		x	Neutral conductor (N)	
X9-03	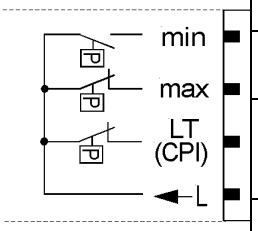	PIN4	x		Pressure switch-min-gas, start release gas	AC 230 V +10 % / -15 %, 50...60 Hz, Imax 1.5 mA
		PIN3	x		Pressure switch-max-gas (DWmax-gas)	AC 230 V +10 % / -15 %, 50...60 Hz, Imax 1.5 mA
		PIN2	x		Pressure switch-valve proving-gas / leakage test or valve closing contact (CPI)	AC 230 V +10 % / -15 %, 50...60 Hz, Imax 1.5 mA
		PIN1		x	Power signal for pressure switch	AC 230 V +10 % / -15 %, 50...60 Hz, Imax 500 mA

Description of connection terminals (cont'd)

Terminal designation	Connection symbol		Input	Output	Description of connection terminals	Electrical rating
X10-01	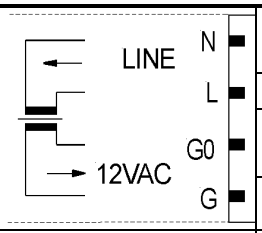	PIN4		x	Neutral conductor (N)	AC 230 V +10 % / -15 %, 50...60 Hz, max 1 mA
		PIN3		x	Power signal transformer	
		PIN2	x		AC power signal GO	AC 12 V +10 % / -15 %, 50...60 Hz, max 1.2 mA
		PIN1	x		AC power signal fan motor (G)	
X10-02	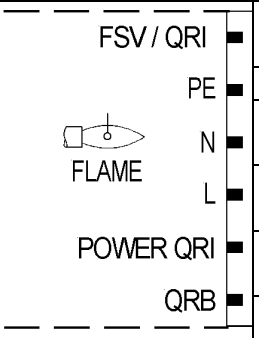	PIN6	x		QRI... (IR detector) / QRA7... signal voltage	Umax DC 5 V
		PIN5		x	Protective earth (PE)	
		PIN4		x	Neutral conductor (N)	
		PIN3		x	Power signal	AC 230 V +10 % / -15 %, 50...60 Hz, Imax 500 mA
		PIN2		x	QRI... (IR detector) / QRA7... power supply	DC 14 / 21 VC Imax 100 mA
		PIN1	x		QRB... signal voltage	Max. DC 8 V
X10-03		PIN1		x	Ionization probe (ION) (alternatively QRA2…/ QRA4.U/QRA10…, refer to section *Description of inputs and outputs*)	Umax (X3-04-PINS) Imax. 0.5 mA
X50	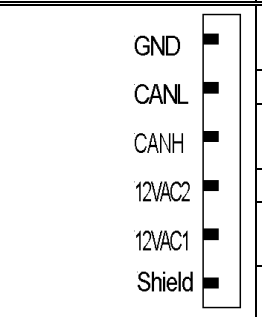	PIN6		x	Reference ground (PELV)	
		PIN5		x	Communication signal (CANL)	DC U ← 5 V, Rw = 120 Ω, level to ISO-DIS 11898
		PIN4		x	Communication signal (CANH)	
		PIN3		x	AC power supply for actuators / display and operating unit AZL5...	AC 12 V +10 % / -15 %, 50...60 Hz, Fuse max. 4 A
		PIN2		x		
		PIN1		x	Shield connection (functional earth)	
X51	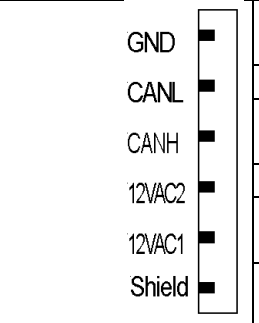	PIN6		x	Reference ground (PELV)	
		PIN5		x	Communication signal (CANL)	DC U ← 5 V, Rw = 120 Ω, level to ISO-DIS 11898
		PIN4		x	Communication signal (CANH)	
		PIN3		x	AC power supply for actuators / display and operating unit AZL5...	AC 12 V +10 % / -15 %, 50...60 Hz, Fuse max. 4 A
		PIN2		x		
		PIN1		x	Shield connection (functional earth)	
X52	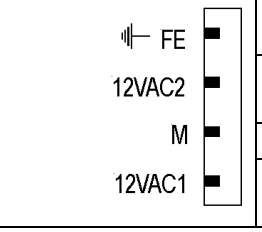	PIN4	x		Functional earth	
		PIN3	x		AC power supply from transformer to LMV5... system	AC 12 V +10 % / -15 %, 50...60 Hz
		PIN2	x		Reference ground (PELV)	
		PIN1	x		AC power supply from transformer to LMV5... system	AC 12 V +10 % / -15 %, 50...60 Hz

Description of connection terminals (cont'd)

Terminal designation	Connection symbol		Input	Output	Description of connection terminals	Electrical rating
Temperature / pressure controller						
X60	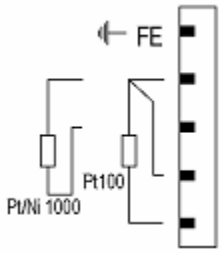	PIN5	x		Functional earth for shield connection	
		PIN4	x		Reference ground	
		PIN3	x		Temperature sensor input Pt / LG-Ni 1000 (Input 4, TEMP)	
		PIN2	x		Line compensation temperature sensor PT100	
		PIN1	x		Temperature sensor input PT100 (input 1, TEMP)	
X61	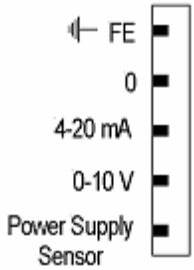	PIN5	x		Functional earth for shield connection	
		PIN4	x		Reference ground	
		PIN3	x		Current input for temperature / pressure signal (input 2, TEMP / PRESS INPUT 4...20 mA))	DC 0...20 mA
		PIN2	x		Voltage input for temperature / pressure signal (input 2, TEMP / PRESS INPUT DC 0...10 V	DC 0...10 V
		PIN1		x	Power supply for temperature / pressure transmitter	approx. DC 20 V Max. 25 mA
X62	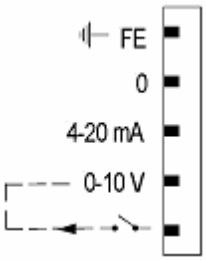	PIN5	x		Functional earth for shield connection	
		PIN4	x		Reference ground	
		PIN3	x		Current input for setpoint or load (input 3, SETPOINT INPUT)	DC 0...20 mA
		PIN2	x		Voltage input for setpoint or load (input 3, SETPOINT INPUT)	DC 0...10 V
		PIN1		x	Power supply for setpoint changeover	approx. DC 24 V Max. 2 mA
X63	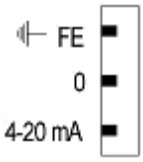	PIN3	x		Functional earth for shield connection	
		PIN2		x	Reference ground	
		PIN1		x	Current output for burner load (LOAD OUTPUT)	DC 4...20 mA, RLmax = 500 Ω

12 Mounting, electrical installation and service

Installation

- **The burner / boiler manufacturer must ensure degree of protection IP40 through appropriate mounting**
- **Depending on the field of use, external requirements may impose more stringent degrees of protection, which must then be observed**
- **When fitted, the maximum permissible ambient temperature must not be exceeded!**
- **The unit is designed for mounting inside the burner casing or in a control panel**
- **The display and operating unit (AZL5…) has its own housing and can be mounted in a suitable location (detached from the basic unit), e.g. away from the burner or in the control panel door**
- **Condensation water must not drip on the unit, neither in operation nor while service work is performed!**
- **The power transformer is not integrated in the LMV5... and must be fitted by the burner / boiler manufacturer in a suitable location**
  (Only the AGG5.2XX transformers specified by Siemens may be used!)

Electrical connections and wiring

The entire RAST5 connection area **does not** feature functional low-voltage.
The RAST3.5 connection area on the unit's small side offers functional low voltage.

- **When making the wiring, the functional low-voltage section must be strictly separated from the other sections to ensure protection against electric shock hazard!**
- **Adequate protection against electrical shock hazard on unused AC 230 V terminals (RAST5) must be provided by fitting dummy plugs!**
- **To isolate the unit from mains supply, a multipolar switch must be used**
- **For wiring the bus users, only the cables specified by Siemens may be used!**
- **The electrical contacts used by the external signal sources (pressure switch-min, pressure switch-max, load controller, etc.) must be gold-plated silver contacts!**
- **The ignition cable must be run to the ignition electrode as directly as possible, with no loops**
  It may never be laid parallel with or very close to other electrical cables.

Connection of LMV5... CAN bus

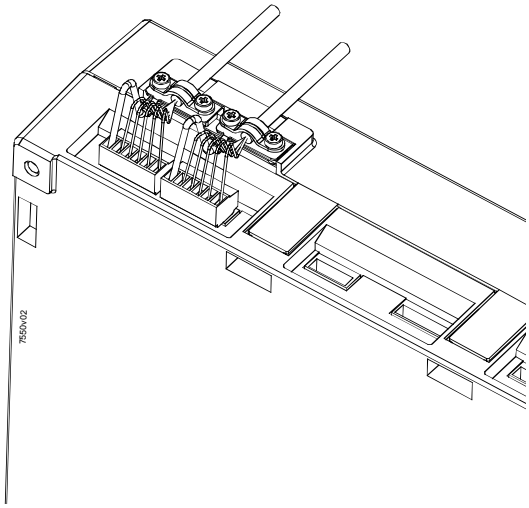

12.1 Power supply to the LMV5... system

General

The LMV5... system is powered via external transformer AGG5.2.... This transformer supplies power to certain electronics sections via terminal X10 – 01 and to internal modules, actuators and display and operating units via terminal X52.
Run the power lines to the bus users together with the communication lines in a common cable.
Since the transformer's power line is restricted, a second power transformer is required if the system uses more than one SQM48 actuator (or in the case of longer distances). The second power transformer is operated as shown in example 2.
In principle, the bus topology must always have a line structure and, therefore, must have a start and an end node.
The individual bus users must be connected in series, whereby the respective end nodes are to be terminated by bus terminating resistors.
The basic unit is a component of the communication line and to be looped in between the AZL5... and the actuators.
Within the system, the AZL5... always assumes the function of a bus end node. The required bus terminating resistor is already integrated in that case.
With the actuators, the last user becomes the bus end node (here, the internal bus termination must be activated via a connecting plug).
The other node users within the line structure are to be configured without using a terminating resistor.

Example 1

Installation of all components in the burner;
CAN bus cable «LMV5... →shielding last actuator » 20 m

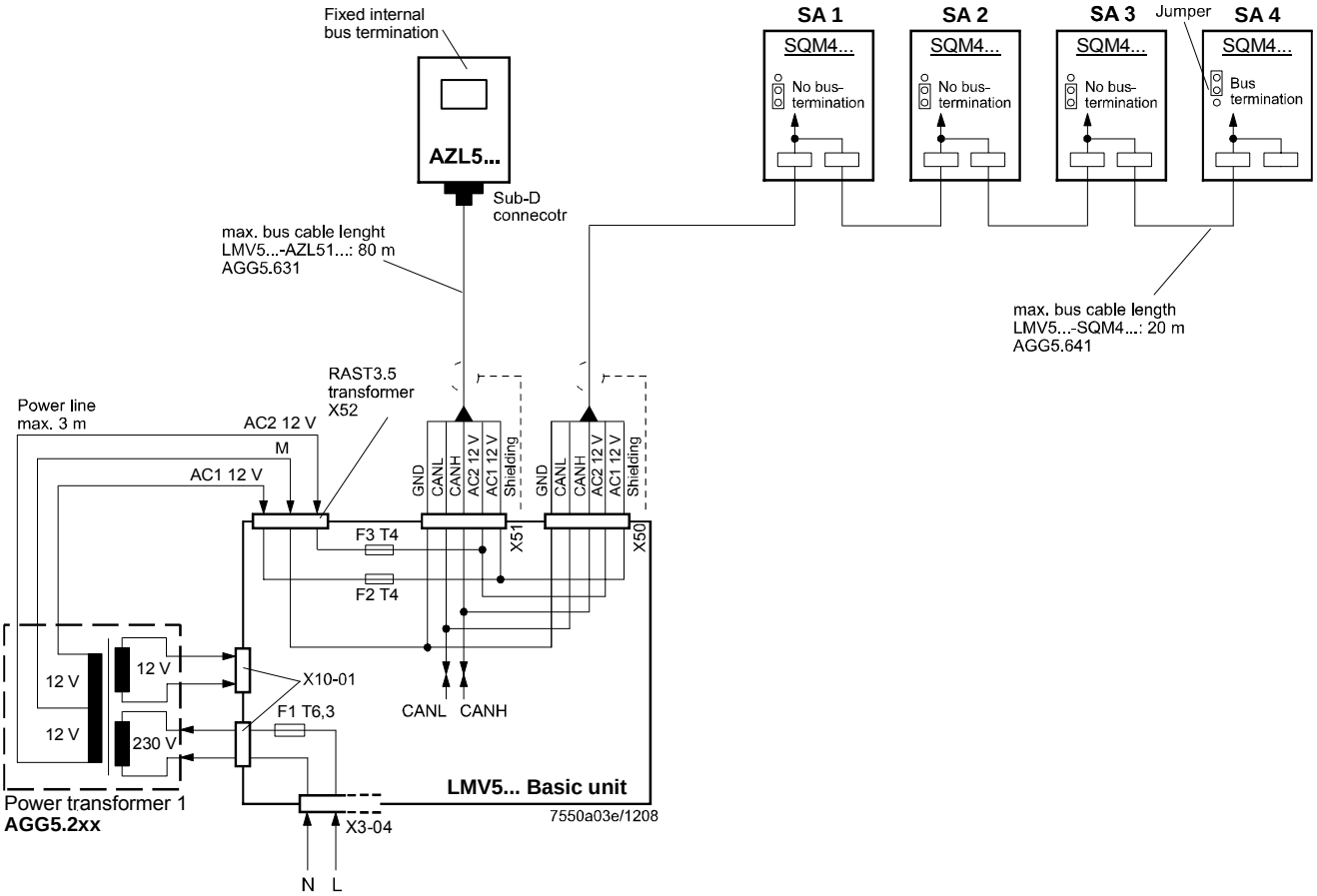

Note on example 1

Total length of CAN bus cable ≤ 100 m

Example 2

LMV5... basic unit in the control panel, actuator on the burner; CAN bus cable «LMV5... → last actuator» > 20 m

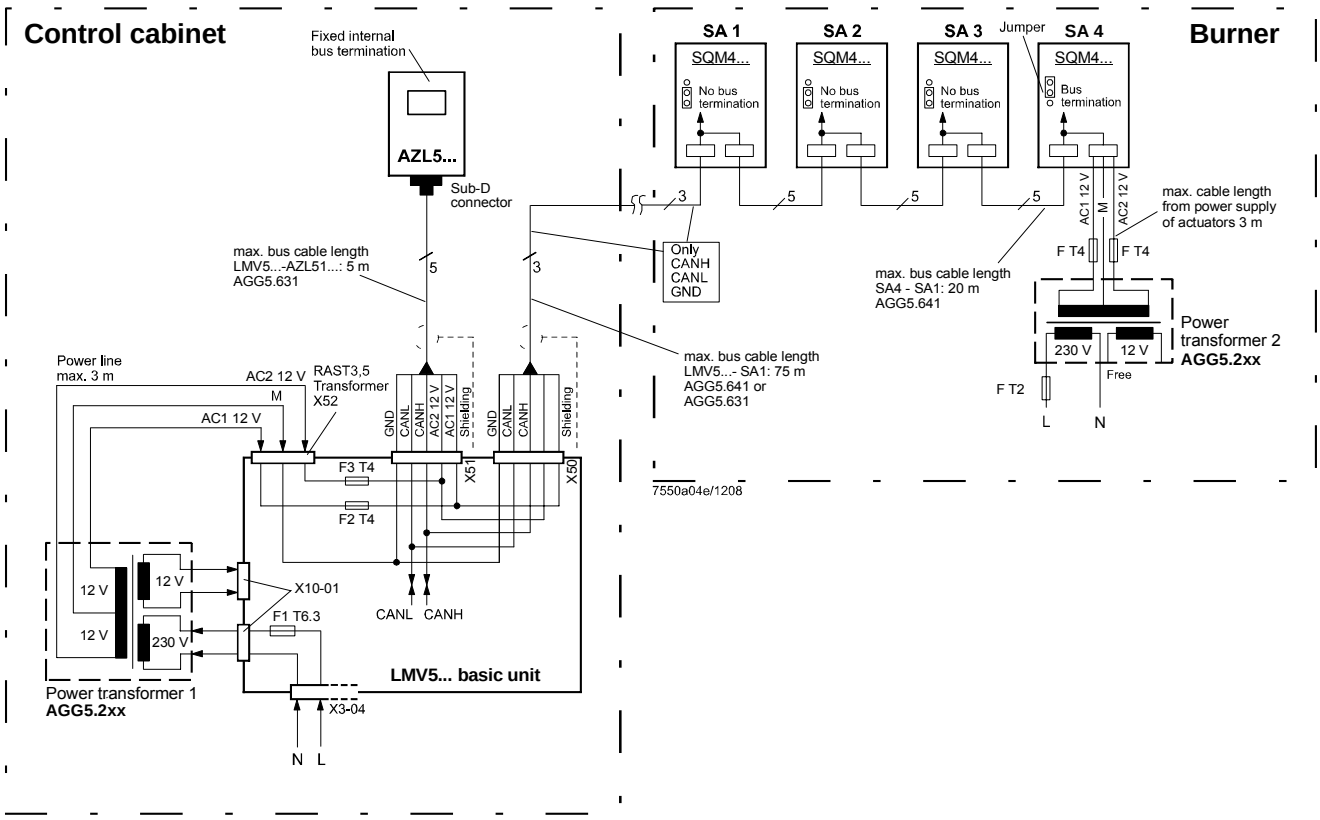

Notes on example 2

Total length of CAN bus cable ≤ 100 m

Whenever the distance between the LMV5... and the last actuator exceeds 20 m, or if more than one SQM48... is used on the burner (refer to sizing chart “Determination of maximum cable length“), a second transformer is required for powering the actuators.

In that case, transformer 1 powers the LMV5... basic unit and the AZL5... display and operating unit (control panel). Transformer 2 powers the actuators (burner).

With the CAN bus cable connections from the LMV5... (control panel) to the first actuator (burner), the 2 voltages AC1 and AC2 on the LMV5... side must **not** be connected and only cables CANH, CANL and M (+shielding) are to be connected to the first actuator (burner).

In that case, the actuators must be powered by a second transformer which to be located near the actuators.

The power from that transformer (lines AC1, AC2, M) must be fed to the actuator (ACT4 in the example above) and then connected through via bus cable AGG5.641 (cable type 1) to all the other actuators.

The fuses required for transformer 1 are accommodated in the LMV5... basic unit.

For transformer 2, these 3 fuses must be located close to the transformer (for type, refer to Basic Documentation P7550).

Example 3a

Installation of all components in the burner;
CAN bus cable «LMV52... ↔ last actuator» > 20 m with 6 actuators and O2 module PLL52...

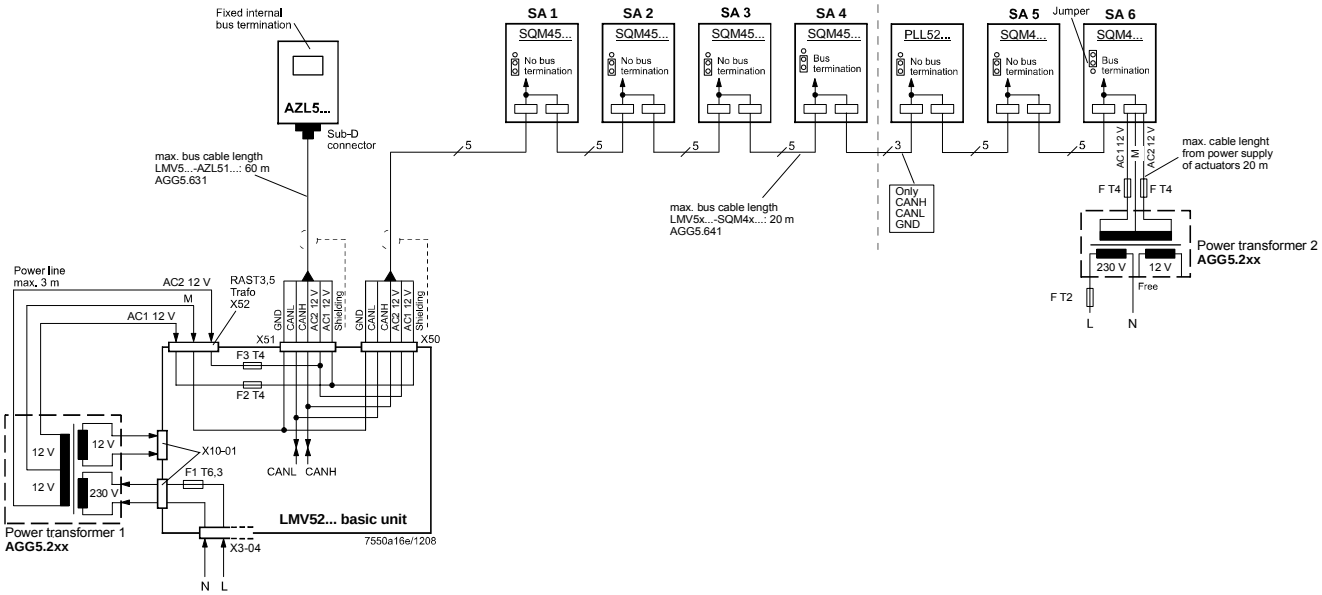

Example 3b

Installation in the control panel, actuator on the burner;
CAN bus cable «LMV52... ↔ last actuator» > 25 m with 4 actuators and O2 module PLL52...

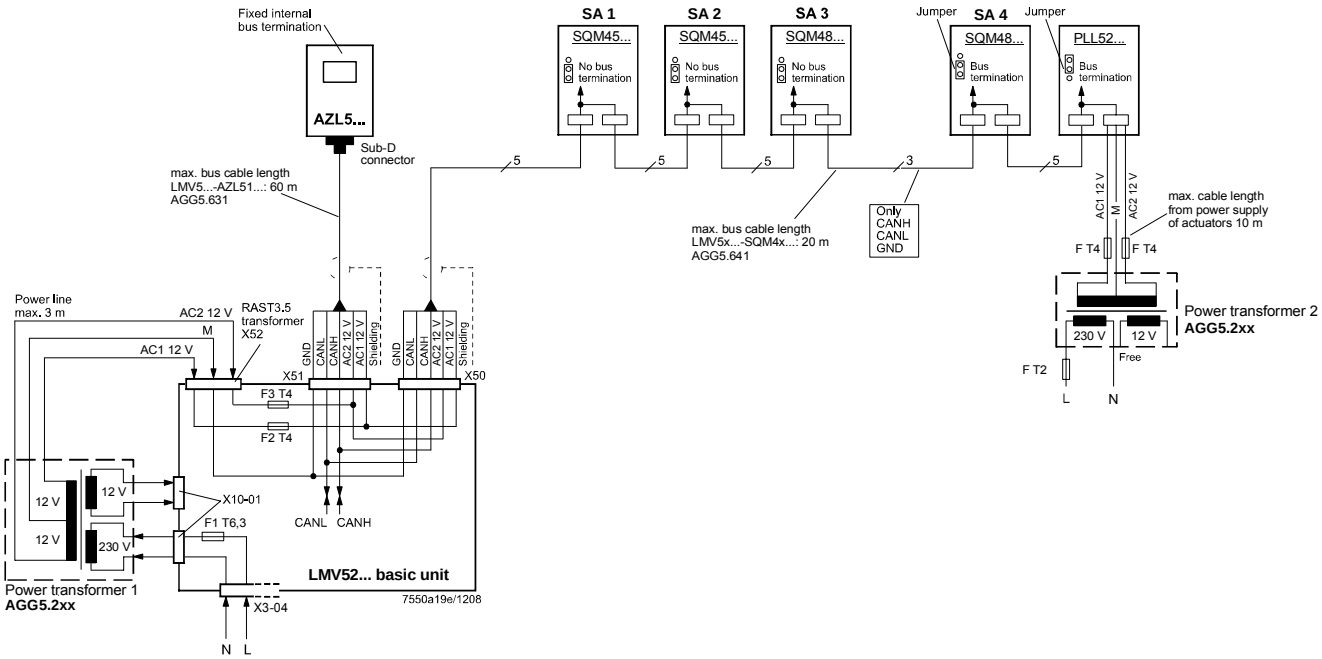

Notes on example 3a / 3b

CAN bus cable with LMV52... and more than 4 actuators and O2 module PLL52...

On LMV52... applications with more than 4 actuators (SQM45...), a second transformer is required for powering the extra actuators.

In that case, transformer 1 powers the LMV52... basic unit, the **AZL5...**, and the first 4 actuators.

Interrupt the connection between the components at a suitable location. On the actuator side, the 2 voltages AC1 and AC2 must **not** be connected but only lines «CANH, CANL and M» (+shield) to the O2 module and the other actuator.

The actuators (SA5, SA6) and the O2 module must be powered by a second transformer to be located near the actuators and the O2 module.

Connect the power supply line from that transformer to the O2 module PLL52… (in example 3a «SA6» / in example 3b «Auxiliary terminal) (lines AC1, AC2, M) and from there, via bus cable AGG5.641, through to the second actuator (SA) and the O2 module.
The fuses required for transformer 1 are accommodated in the LMV52... basic unit.

Optionally, the supply voltage can also be delivered via a conduit box and fed into the connecting line between SA4 and PLL52…

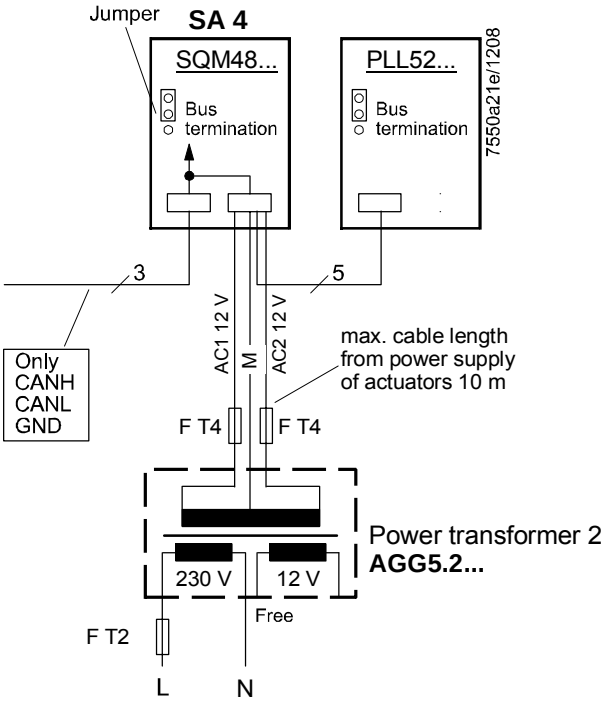

For transformer 2, the OEM must fit the 3 fuses close to the transformer.

Determination of the maximum cable length

The maximum cable length between transformer and CAN bus users is dependent on the type of cable (cross-sectional area), the number of actuators and the type of actuator used (current).
The following graphs can be used to determine the maximum CAN bus cable lengths between the transformer and group of actuators or the AZL5…, depending on the relevant influencing factors.
The assumption was made that the actuators within the group are close to one another.
The **minimum** cross-sectional area for the system examples shown results from the start of the curve.
The **maximum** cable lengths for the defined system cables AGG5.641 and AGG5.631 result from the points of intersection in the graph.

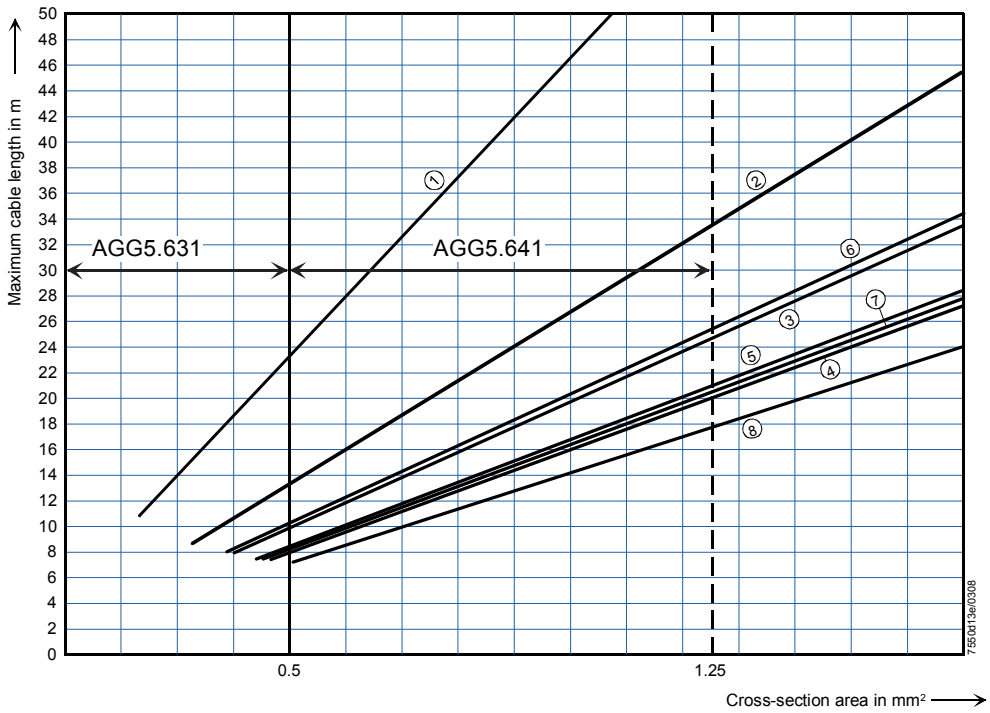

AGG5.631 (cable type 2)
AGG5.641 (cable type 1)

①	1 x SQM45...	⑤	2 x SQM48...
②	2 x SQM45...	⑥	1 x SQM45... + 1 x SQM48...
③	3 x SQM45...	⑦	2 x SQM45... + 1 x SQM48...
④	4 x SQM45...	⑧	3 x SQM45... + 1 x SQM48...

CAN bus connection between transformer and actuator group

When connecting a PLL52... O2 module, the maximum permissible cable length of a network is to be reduced by 2 m.

Example: - System cable: AGG5.641 (connecting cable to the actuators)
- Actuators: 2 x SQM45...

The point of intersection of the vertical line for the AGG5.641 (1.25 mm^2) and curve ① (2 x SQM45...) gives a maximum cable length of 33.4 m between the transformer and the group of actuators.

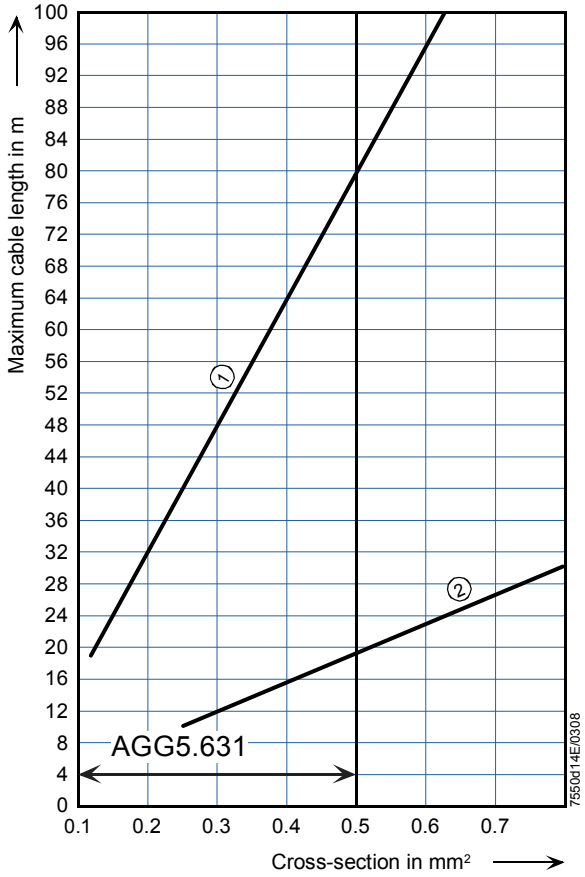

AGG5.631 (cable type 2)

① 1 x AZL5...

② 1 x AZL5... + 1 x SQM45...

CAN bus connection between transformer and AZL5...

Types of cable

AGG5.641 (cable type 1) LMV5... ↔ actuator

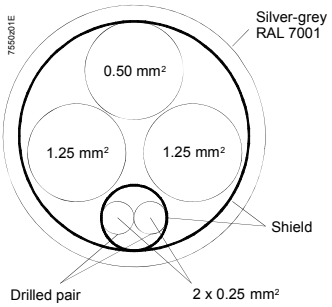

AGG5.631 (cable type 2) LMV5... ↔ AZL5…

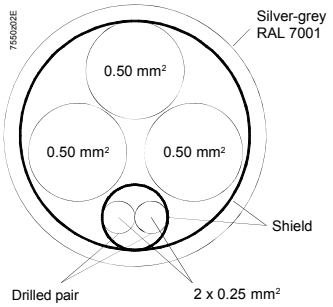

12.2 Suppliers of other accessory items

Mounting clip for mounting rail order no. 2309.000

Rittal GmbH & Co. KG
Auf dem Stützelberg
35745 Herborn
Germany
Tel: 0049 / 2772 / 505-0
Fax: 0049 / 2772 / 505-2319
www.rittal.de

PC adapter part no. 230 437

Karl Dungs GmbH & Co.
Steuer- und Regeltechnik
Postfach 1229
D-73602 Schorndorf
Germany

13 Duties of the authorized inspector

Prior to approval, the manufacturer must state the assigned DIN registration number and product ID number confirming that the LMV5... burner management system complies with the type-tested system.
Also, only the components specified for use with the LMV5… system (AZL5…, actuating devices, flame detectors, transformer and CAN bus cable) may be used and, in addition with the LMV52..., the O2 module and the O2 sensor. In the case of VSD operation, we recommend to use the AGG5.310 accessory set for acquiring the fan speed.

LMV51... systems	Flame detectors QRA…	refer to Data Sheet N7712
	Flame detectors QRB...	refer to Data Sheet CC1N7714
	Flame detectors QRI...	refer to Data Sheet CC1N7719
	Actuators SQM4...	refer to Data Sheet CC1N7814
	Operating and display unit AZL5...	refer to User Documentation CC1A7550
	Transformer AGG5...	refer to Basic Documentation CC1P7550
	CAN bus connecting cable AGG5.63...	refer to Basic Documentation CC1P7550
	Accessory set AGG5.310 for acquiring the fan speed (recommended, if required)	refer to Basic Documentation CC1P7550
In addition with LMV52... systems	Residual oxygen measuring module PLL52...	refer to Basic Documentation CC1P7550
	Oxygen sensor QGO20...	refer to Data Sheet CC1N7842
	Flue gas collector AGO20...	refer to Data Sheet CC1N7842
	Accessory set AGG5.310 for acquiring the fan speed (recommended)	refer to Basic Documentation CC1P7550

The mechanical links between the actuators and the fuel and air actuating devices and any other actuating devices used must be rigid.

In addition, following must be checked:

Correct parameterization of the system

The parameterized values and setting values (e.g. curve characteristics) that define the fuel / air ratio control system and, if used O2 trim control must be **documented** by the individual responsible for plant / the heating engineer after the plant is installed and commissioned. These data can be printed out with the help of the ACS450 PC software, for example, or they must be put down in writing. These documents must be kept in a safe place and are to be checked by the inspector.

On the OEM access level of the LMV5... system, it is possible to make parameter settings that differ from application standards. For this reason, it is to be checked whether parameterization is in compliance with the relevant application standards (e.g. EN 298, EN 230, EN 676, EN 267, etc.) or whether the respective plant can be approved on an “individual basis“.

The following parameters are of particular importance:

Fuel / air ratio control system

The setting values (curve parameters) for the actuating devices, the types of fuel and the combustion air across the burner's load range must be stored in adequate numbers.
While considering the combustion chamber pressure, fuel pressure as well as temperature and pressure of the combustion air, assignment of the selected setting values of fuel and combustion air must be made such that correct operation with sufficient amounts of excess air is ensured across the entire burner load range.
Proof of this must be delivered by the burner / boiler manufacturer by measuring the combustion characteristics. When using a VSD, the fan will be run to the steady-state condition. Hence, the burner's nominal load refers to the fan speed acquired with speed standardization.

Burner control section

Fuel train parameterization (G, Gp1, Gp2, LO, HO, LOgp, HOgp, refer to chapter 3 Fuel train applications (examples) must be checked prior to commissioning to ensure it agrees with the fuel trains implemented on the burner and to make certain the valves are correctly assigned to the valve outputs on the LMV5... .

The correct setting of the time parameters, especially the safety and prepurge times (separately for oil and gas), must be checked.
It must also be checked if, in the case of plants with continuous operation, flame detector type QRI... / QRA7... (or the ionization probe) is used, because only these are suited for continuous operation.
Further, the function of the flame detector in the event of loss of flame during operation and with extraneous light during the prepurge time, or in the case there is no establishment of flame at the end of the safety time, must be checked.
(With the QRI... flame detector, generation of an extraneous light signal is achieved by simulating a flickering flame with an artificial light source). With QRA7... an extraneous light can be simulated via lighter or a halogen emitter without UV filter.

The functions of all available or required input messages must be checked, for example:

- Air pressure
- Minimum gas pressure
- Maximum gas pressure
- Gas valve proving or CPI
- Minimum oil pressure
- Maximum oil pressure
- Safety loop (e.g. safety limit thermostat)
- Fan contactor contact in at least 2 phases (e.g. prepurge and operation)

It is to be checked whether gas valve proving is activated if required by the application. If yes, the correct leakage rate is to be checked. For details, refer to chapter «Gas valve proving».
In the case of dual-fuel burners, short preignition_Oil (from phase 38) must be parameterized when firing on oil, and the oil pump must be equipped with a magnetic clutch, for example, ensuring that the oil pressure will be increased in phase 38 before ignition takes place. In addition, parameter «OilPumpCoupling» must be set to «Magnetcoupl». Pure oil burners do not require a magnetic clutch, in which case long preignition_Oil (from phase 22) is to be parameterized, or parameter «OilPumpCoupling» is to be set to «Directcoupl».

O2 trim control (only with LMV52... system)

The O2 trim control system of the LMV52... offers a number of operating modes. In operating mode «CtrlAutodeact», O2 trim control is automatically deactivated by the LMV52... if the O2 limit switch responds or if a fault in connection with actual value acquisition of O2 occurs (O2 sensor, O2 module, O2 sensor test, etc.). Also, O2 trim control can be deactivated manually, «mandeact». For this reason, the fuel / air ratio curves with the LMV52... must always be set such that there are sufficient amounts of excess air irrespective of environmental conditions (e.g. combustion chamber and fuel pressure, and temperature and pressure of the combustion air) across the whole load range – same as with a system without O2 trim control (LMV5…). Also, the fuel / air ratio curves must be proven. The actual O2 value should not fall below the O2 setpoint of O2 trim control.

A sufficient number of curvepoints (for actuator positions, O2 setpoints, etc.) should be stored to ensure that there is a linear progression of the O2 value across the entire load range. The second curvepoint must correspond to the low-fire position (or be set to a lower value). The first curvepoint must lie sufficiently below curvepoint 2 (at about 50 % load) so that the curves are defined for reducing the air rate by O2 trim control below the low-fire position also.

The O2 min. value represents the switch-off threshold of the O2 monitoring function and must be set and proven such that – across the entire load range and while taking into account the combustion chamber and fuel pressure as well as the temperature and pressure of the combustion air – there will be no dangerous increase of the CO and/or soot values.
On the other hand, the safety distance from the dangerous area should be selected as small as possible in order to prevent inadvertent or undesired shutdowns (guide values: CO < 2000 ppm Vol % or soot number < 3 according to Bacharach).

The O2 setpoint must have an adequate distance from the above mentioned O2 min. value (guide value: O2 setpoint = O2 min. value + 1 % O2).

General

It must be made certain that all safety notes and the notes on mounting, electrical installation and service according to the above mentioned chapter and Data Sheets are complied with.

14 Technical data

14.1 LMV5... and AZL5...

Basic unit LMV5...

Mains voltage	**AC 120 V** -15 % / +10 %	**AC 230 V** -15 % / +10 %
Transformer AGG5.210 / AGG5.220 - Primary side - Secondary side 1 - Secondary side 2	 AC 120 V AC 12 V 2 x AC 12 V	 AC 230 V AC 12 V 2 x AC 12 V
Mains frequency	50 / 60 Hz ±6 %	50 / 60 Hz ±6 %
Power consumption	<30 W (typically)	<30 W (typically)
Safety class	I with parts according to II and III as per DIN EN 60730-1	

14.2 Loads on terminals, cable lengths and cross-sectional areas

Loads on terminals «inputs»

General data		
Mains voltage	**AC 120 V** -15 % / +10 %	**AC 230 V** -15 % / +10 %
• Perm. mains primary fuse (external)	Max. 16 AT	Max. 16 AT
• Unit fuse F1 (internal)	6,3 AT to DIN EN 60 127 2/5	6,3 AT to DIN EN 60 127 2/5
• Mains supply: The mains input current depends on the status of the unit		
Under voltage		
• Safety shutdown from operating position at mains voltage	<AC 96 V	<AC 186 V
• Restart on increase of mains voltage	>AC 100 V	>AC 188 V
Oil pump / magnetic clutch (Nominal voltage)		
• Nominal current	1.6 A	2 A
• Power factor	Cosφ >0.4	Cosφ >0.4
Air pressure switch test valve (Nominal voltage)		
• Nominal current	0.5 A	0.5 A
• Power factor	Cosφ >0.4	Cosφ >0.4
Status inputs (CFN): Status inputs (with the exception of the safety loop) of the contact feedback network (CFN) are used for system supervision and require a mains-related input voltage.		
• Input safety loop	Refer to «Loads on terminals outputs»	
• Input currents and input voltages		
- UeMax	UN +10 %	UN +10 %
- UeMin	UN -15 %	UN -15 %
- IeMax	1.5 mA peak	1.5 mA peak
- IeMin	0.7 mA peak	0.7 mA peak
• Recommended contact material for external signal sources (air pressure switch, pressure switch-min, pressure switch max, etc.)	Gold-plated silver contacts	
• Transition / transient behavior / bouncing		
- Perm. bounce time of contacts when switching on / off	Max. 50 ms (after the bounce time, the contact must be permanently closed or open)	
• UN	AC 120 V	AC 230 V
• Voltage detection		
- ON	AC 90...132 V	AC 180...253 V
- OFF	<AC 40 V	<AC 80 V

Loads of terminals «Outputs»

Total load on contacts

Mains voltage	**AC 120 V** -15 % / +10 %	**AC 230 V** -15 % / +10 %
• Input current of unit (safety loop) total load on contacts resulting from: - Fan motor conductor - Ignition transformer - Valve - Oil pump / magnetic clutch	max. 5 A	max. 5 A

Single contact load

Fan motor contactor (nominal voltage)		
• Nominal current	1 A	1 A
• Power factor	Cosφ >0.4	Cosφ >0.4
Alarm output (nominal voltage)		
• Nominal current	1 A	1 A
• Power factor	Cosφ >0.4	Cosφ >0.4
Ignition transformer (nominal voltage)		
• Nominal current	1.6 A	2 A
• Power factor	Cosφ >0.2	Cosφ >0.2
Fuel valve gas (nominal voltage)		
• Nominal current	1.6 A	2 A
• Power factor	Cosφ >0.4	Cosφ >0.4
Fuel valve oil (nominal voltage)		
• Nominal current	1.6 A	1 A
• Power factor	Cosφ >0.4	Cosφ >0.4
Cable lengths		
• Main cable	Max. 100 m (100 pF/m)	Max. 100 m (100 pF/m)
• CFN cable	Max. 100 m (100 pF/m) [1)]	Max. 100 m (100 pF/m) [1)]
• Analog cable	Max. 100 m (100 pF/m)	Max. 100 m (100 pF/m)
• Flame detector	Refer to chapter «Technical Data / Flame supervision»	
• CAN-bus	Total length max. 100 m	

[1)] If the cable length exceeds 50 m, no additional loads may be connected to the status inputs, refer to «Power supply for LMV5... systems»!

When a certain cable length is exceeded, the actuators must be powered by a transformer located near the actuators.

14.3 Cross sectional areas

The cross-sectional areas of the mains supply lines (L, N, PE) and, if applicable, the safety loop (safety temperature limiter, shortage of water, etc.) must be sized for nominal currents in agreement with the selected external primary fuse.
The cross-sectional areas of the other cables must be sized in agreement with the internal unit fuse (max. 6.3 AT).

Min. cross-sectional area	0.75 mm² (single- or multi-core to VDE 0100)

Cable insulation must satisfy the requirements of the relevant temperature and environmental conditions. The CAN (bus) cables have been specified by Siemens and can be ordered as accessory items. **Other types of cables must not be used. Otherwise, the EMC characteristics of the LMV5... system will become unpredictable!**

Main voltage	**AC 120 V** -15 % / +10 %	**AC 230 V** -15 % / +10 %
Fuses in the LMV5... basic unit		
- F1	6.3 AT DIN EN 60127 2/5	6.3 AT DIN EN 60127 2/5
- F2	4 AT GMD-4A	4 AT DIN EN 60127 2/5
- F3	4 AT GMD-4A	4 AT DIN EN 60127 2/5

14.4 AZL5... display and operating unit

Operating voltage	AC 24 V -15 % / +10 %
Power consumption	<5 W (typically)
Degree of protection of housing - Rear - Front	 IP00 to IEC 529 IP54 to IEC 529 (when built in)
Safety class	I with parts according to II and III as per DIN EN 60730-1
Battery:	
Manufacturer	**Type reference**
VARTA	CR 2430 (LF-1/2 W)
DURACELL	DL 2430
SANYO ELECTRIC, Osaka / Japan	CR 2430 (LF-1/2 W)
RENATA AG, Itingen / CH	CR 2430

14.5 CAN-bus

Types of cable	
AGG5.641	8 mm dia. ±0.2 mm bending radius: 120 mm ambient temperature: -30...+70 °C (cable not moving) cable jacket resistant to almost all types of mineral oil
AGG5.631	7.5 mm dia. ±0.2 mm bending radius: 113 mm ambient temperature: -30...+70 °C (cable not moving) cable jacket resistant to almost all types of mineral oil

14.6 Environmental conditions (of all LMV5... system components)

Storage	DIN EN 60721-3-1
Climatic conditions	Class 1K3
Mechanical conditions	Class 1M2
Temperature range	-20...+60 °C
Humidity	<95 % r.h.
Transport	DIN EN 60721-3-2
Climatic conditions	Class 2K2
Mechanical conditions	Class 2M2
Temperature range	-20...+60 °C
Humidity	<95 % r.h.
Operation	DIN EN 60721-3-3
Climatic conditions	Class 3K3
Mechanical conditions	Class 3M3
Temperature range	-20...+60 °C
Humidity	<95 % r.h.

⚠ **Condensation, formation of ice and ingress of water are not permitted!**

15 Dimensions

Dimensions in mm

LMV5...

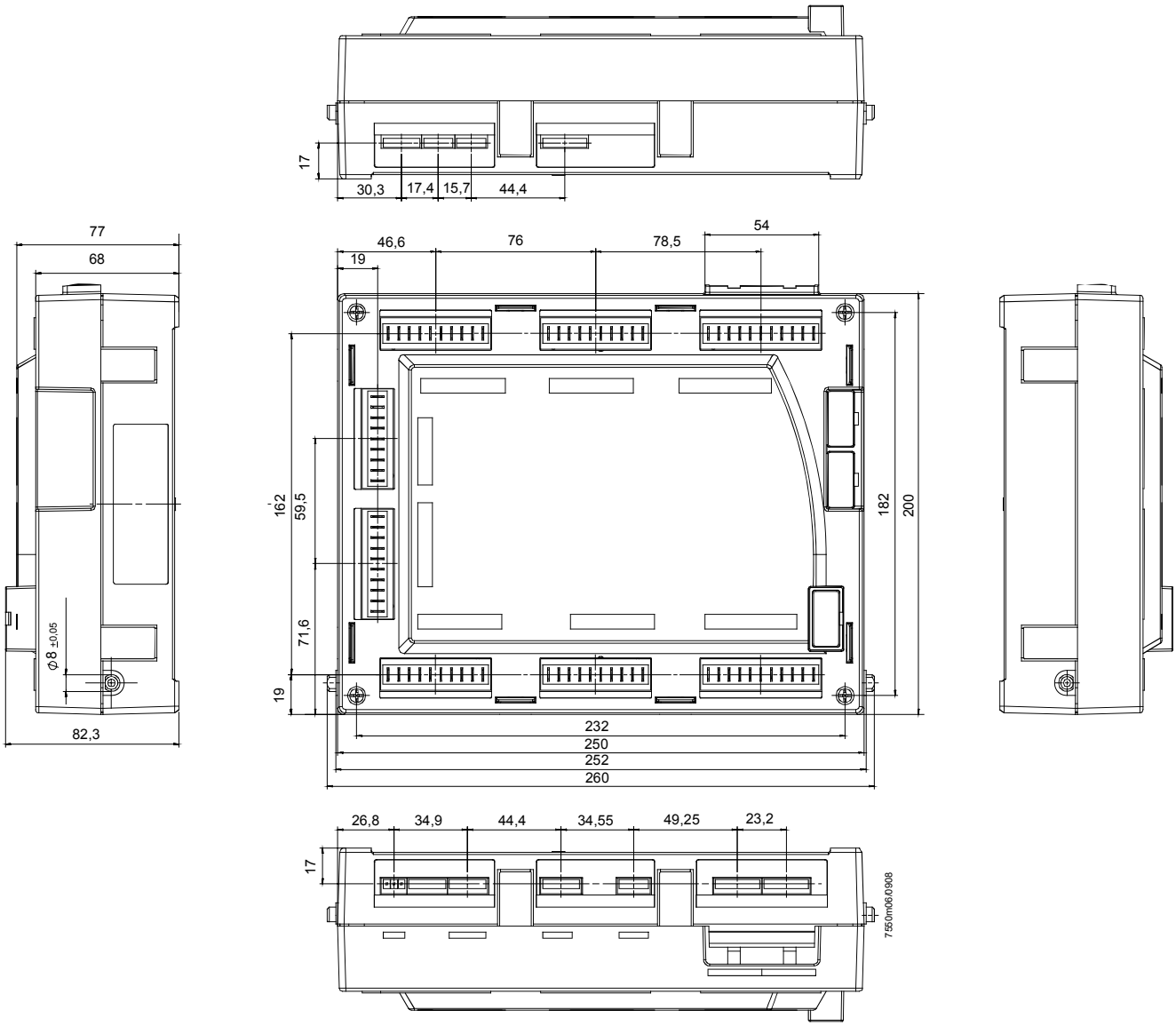

Dimensions in mm

AZL5...

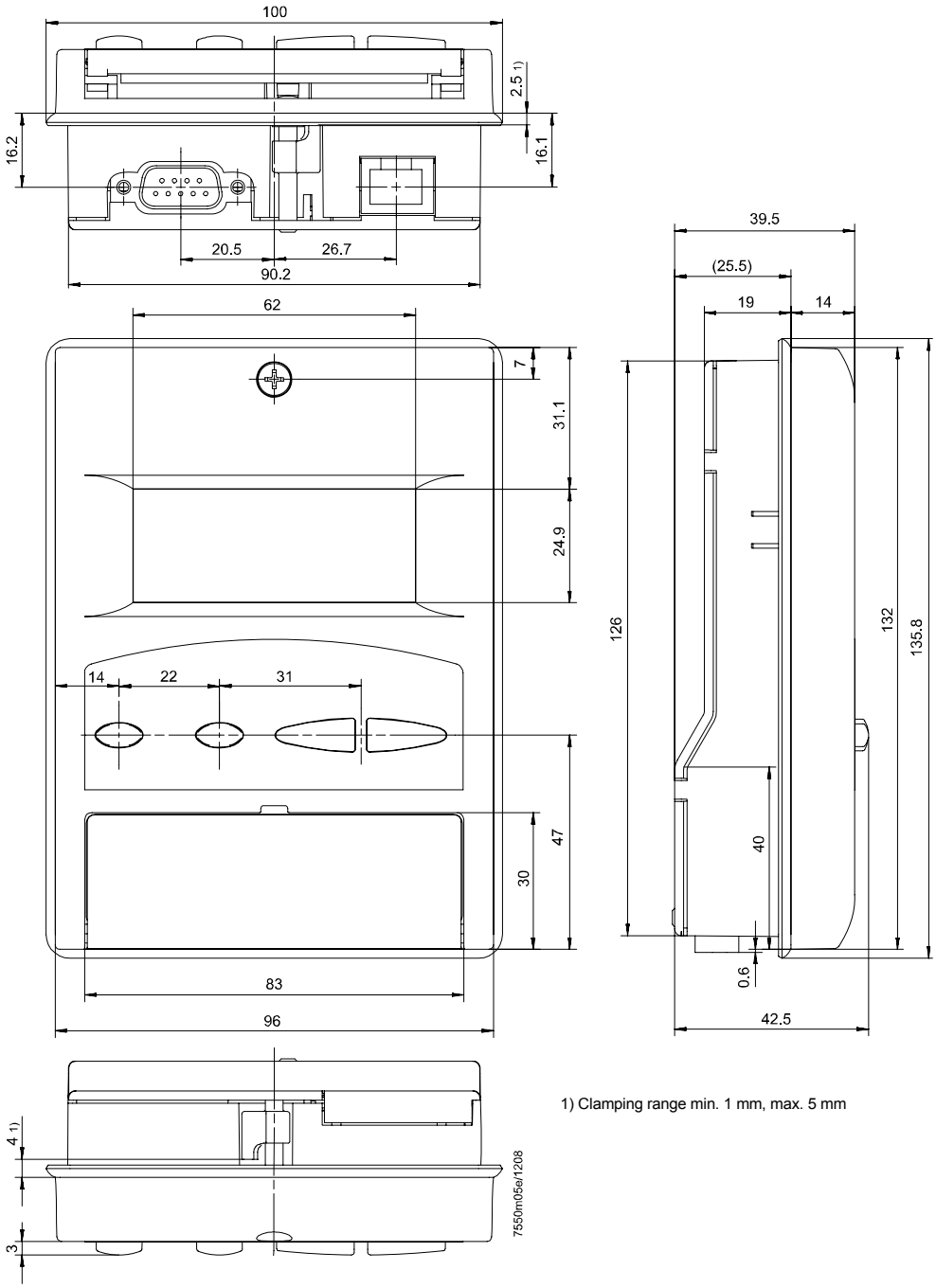

1) Clamping range min. 1 mm, max. 5 mm

Dimensions in mm

AGG5.210… /
AGG5.220…

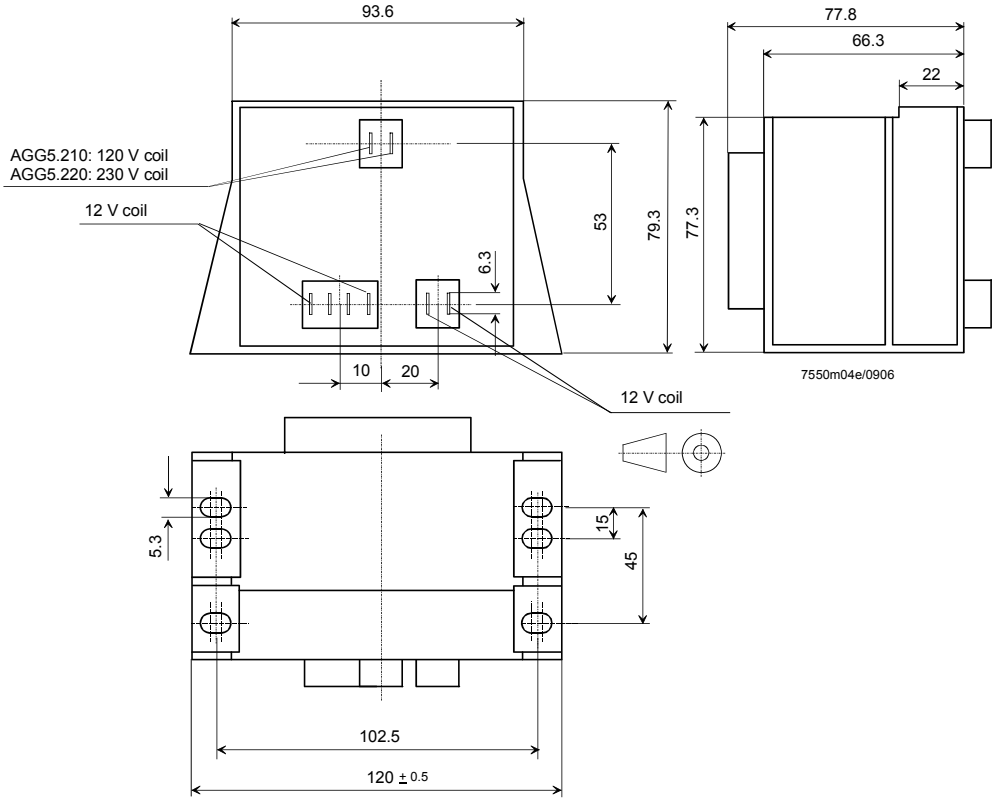

16 Addendum 2: Connection diagram

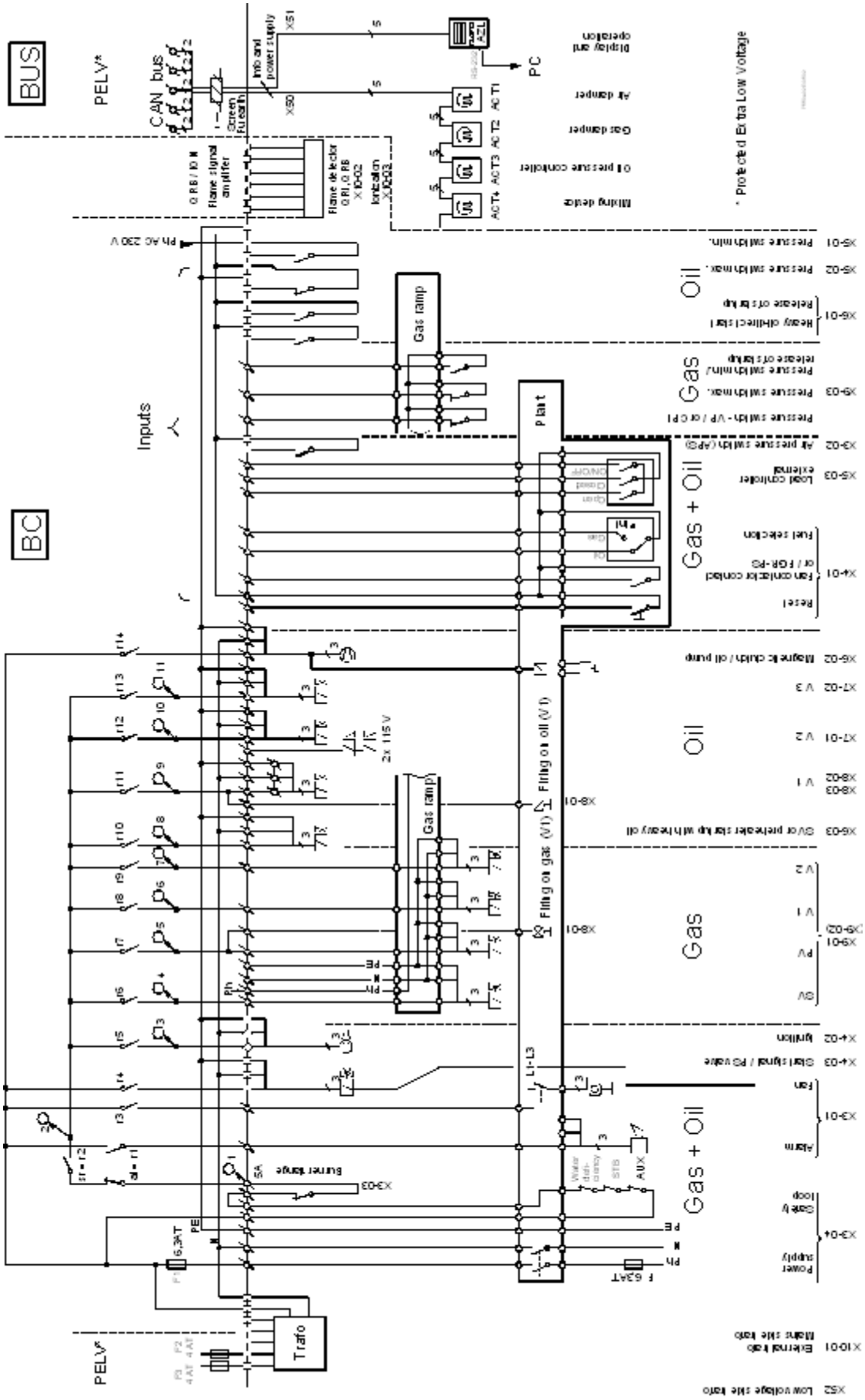

17 Addendum 3: Variable speed drive (VSD) module

(Only with LMV52.2... and AZL52…)

General

The VSD module is an extension to the LMV5... burner control system and is used for the control of VSD that ensure safety-related supervision of the fan speed.
2 fuel meters (oil and gas) can be connected as an option.

Basic diagram

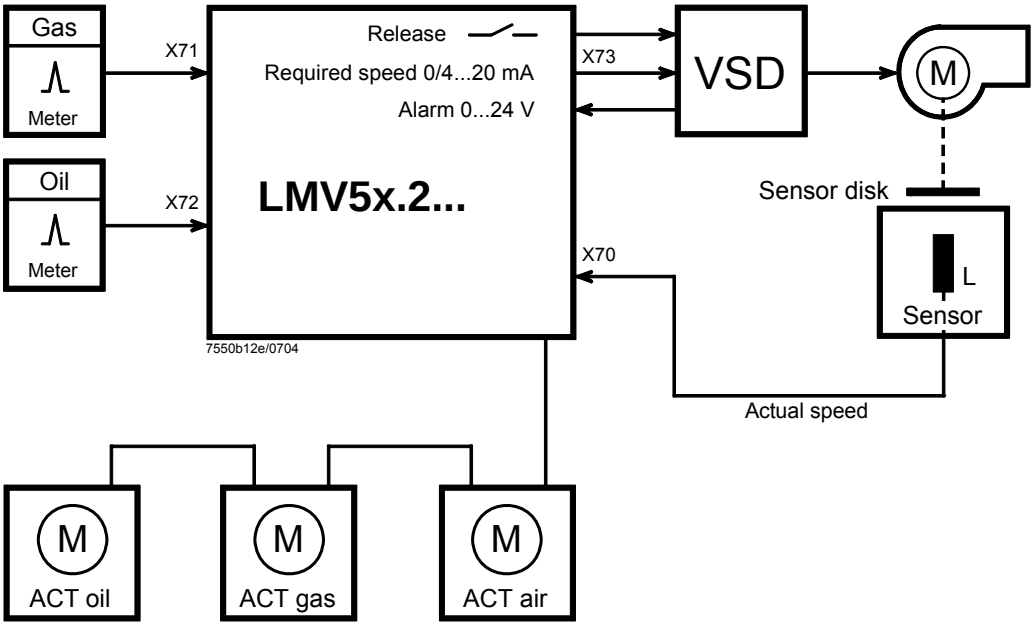

LMV51... Configuration of the basic unit (BU)

The auxiliary actuator can be parameterized on the basic unit, depending on the type of fuel burnt. The function offers 2 choices: Air damper or VSD.

The «Damper» configuration corresponds to the previous function of the LMV51.000B2 and LMV51.100B2.
If «VSD active» is configured, it is used in place of the auxiliary actuator. This means that with all curve and position settings, «Auxiliary» refers to the VSD.
Owing to the system characteristics of the LMV51.2..., VSD operation always demands an air damper.
This means that an LMV51.2... system must be equipped with at least one fuel actuator, one air actuator and one VSD («VSD active»).

Parameter	*Aux Actuator (deactivated / activeDamper / active VSD)*

LMV52... configuration of the basic unit (BU)

On the LMV52.2..., the VSD option can be selected in addition to the actuators.

Here, it is also selected whether the VSD shall be used in connection with O2 trim control.

Parameter	*VSD (deactivate / activate / air influen)*

17.1 VSD module

General

A VSD can be connected to the VSD module integrated in the LMV52.2...
The VSD is controlled via an analog current output and a potential-free release contact. Evaluation of the alarm feedback signal from the VSD is accomplished with a 0...24 V output. When activated, the LMV52.2... will enter the safety phase.
Both motor speed and direction of rotation are acquired by an inductive sensor. The asymmetric speed signal is checked for direction of rotation and plausibility.

The VSD module generates acceleration and deceleration ramps in accordance with the parameters settings made on the LMV52.2...
The motor speed is adjusted based on the same principle as that used with actuator adjustments. For this reason, the characteristic of the VSD must be linear. Filters, delay and damping members must be removed.
The VSD module of the LMV52.2... controls the motor speed to the setpoint. The control range is limited to +15 % / -10 %.
If control range limitation becomes active, an appropriate display appears on the AZL5... If that is the case over a longer period of time (→ «Safety Time Ratio Control»), the LMV52.2... will be shut down and the message «Special Position not reached» or «Speed not reached» will appear.
Speed control is active for speeds ≥ 8 %.

17.1.1 Inputs / outputs

Connection diagram

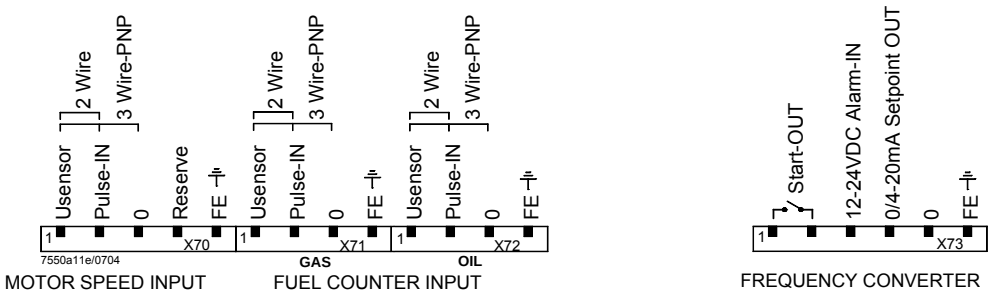

Release contact X73-1 / -2

The LMV52.2... has a potential-free release contact for the VSD. This contact will be activated when a motor speed other than zero is required.

The behavior of the release contact in the home run phase and a no-load position of 0 % can be defined via the following parameter. *Releasecontct* = *open* allows use of a DC break, for instance.

Voltage: ≤ AC / DC 24 V (protective extra low-voltage)
Current: 5 mA to 2 A

Parameter	*ReleasecontctVSD (closed / open)*

Alarm input X73-3

The alarm input of the LMV52.2... will be connected to the alarm output of the VSD. In the event of an alarm, safety shutdown will be triggered as a minimum requirement.

Voltage active:	DC 12...24 V	(alarm ON)
Voltage inactive:	< DC 4 V	(alarm OFF)

Analog output to the VSD X73-4

This output is used for delivering the preselected speed setpoint to the VSD.

Current:	0 / 4...20 mA ≈ 0...105 % (→ «Standardization of Speed»)
Output load:	max. 750 Ω (burden), short-circuit-proof
Resolution:	0.1 %
Cross-sectional area of wire:	≥ 0.1 mm^2

Quick shutdown in the event of great speed deviations during operation

This function is used to trigger safety shutdown as quickly as possible (within about 1 second) if great speed deviations are detected, or if speed = 0 is detected in operation. This check is made from phase *Ignition On 38* through *Afterburn time 7*0.

The degree of deviation where quick shutdown shall take place can be set via parameter *TolQuickShutdown*:

Checking is deactivated when 100 % is entered as the tolerance value.

Setting range:	0…100 %
Resolution:	0.4 %

Parameter	*TolQuickShutdown*

Speed feedback signal

The motor's speed can be acquired with different types of sensors. To detect the motor's direction of rotation with a sensor, a sensor disk with angular steps of 60°, 120° and 180° is used. The sensor disk generates pulse intervals of different length.

Speed acquisition is safety-related!

We recommend using the accessory set AGG5.310.
To enable the acquired speed to be standardized to the range of 0...100 %, the speed that corresponds to 100 % must be parameterized (→ «Standardization of speed»).

Speed input X70

Motor speed:	300...6300 1 / min
100 % speed:	1350...6300 1/ min
Sensor:	Inductive sensor to DIN 19234 or open collector (pnp) U_{CEsat} < 4 V, U_{CEmin} > DC 15 V
Power supply:	DC 10 V, max. 15 mA
Switching current:	> 10 mA
Cable length:	max. 100 m (sensor line must be run **separately**!)

Safe separation between mains voltage and protective extra low-voltage

All inputs and outputs of the VSD module comply with the requirements for protective extra low-voltage. Hence, the mains voltage section must strictly be separated!

Sensor disk

Sensor disk and speed sensor can be ordered as accessory set AGG5.310.

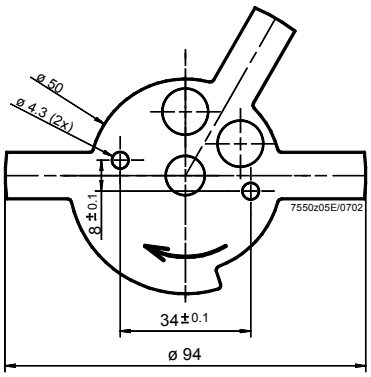

Number of tappets:	3
Angular steps:	60°, 120°, 180°
Accuracy:	± 2°

Speed sensor

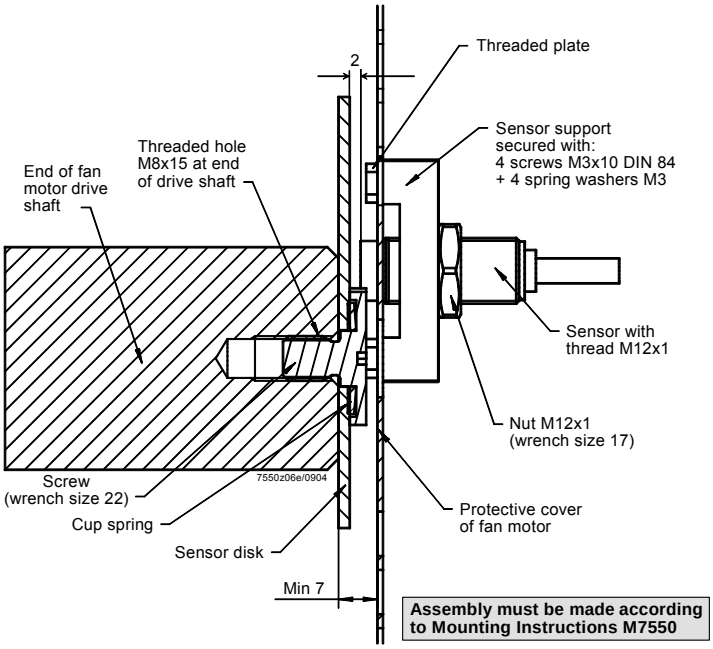

Selection of fan motor

1. Motor supplier: Version **with** threaded hole M8x15
2. Standard motor plus extra machining (drilling hole and cutting thread M8x15)

Fuel meter

To acquire the amount of fuel consumed, up to 2 fuel meters can be connected. Assignment to the type of fuel is fixed.
To adapt to different types of fuel meters, assignment of the number of pulses and the resulting fuel throughput must be parameterized.

Fuel meter input X71 / X72

Type of sensor:	inductive sensor to DIN 19234 (Namur) or open collector (pn) with U_{CEsat} < 4 V, U_{CEmin} > DC 15 V or Reed contact
Frequency:	≤ 300 Hz
Pulses / l or gal, m^3:	≤ 9999.9999 (to be parameterized)
Pulses / ft^3:	≤ 999.99999 (to be parameterized)
Power supply:	DC 10 V, max. 15 mA
Switching current:	> 10 mA

17.1.2 Configuring the VSD

The VSD must be configured in accordance with the type of motor connected.
The acceleration and deceleration ramps must be set about 30 % shorter than the ramps parameterized in the electronic fuel / air ratio control system of the LMV52.2...

Example: Drive ramp of 10 seconds ⇒ VSD ramps to be set to 7 seconds
Drive ramp of 30 seconds ⇒ VSD ramps to be set to 20 seconds
Drive ramp of 60 seconds ⇒ VSD ramps to be set to 40 seconds

The motor must be able to follow the parameterized VSD ramp.
If this is not observed, the predefined speeds will not be reached within the respective periods of time.
The configuration of the current / voltage interfaces of the VSD must be in accordance with the configuration of the LMV52.2... VSD module.

The minimum output frequency of the VSD must be set to 0 Hz. To ensure that the fan motor will reach the required speed under all operating conditions, the VSD during configuration will be controlled with a maximum of only 95 % of the positioning signal. If the burner's rated capacity calls for full fan speed, the maximum output frequency must be set to 105.2 % of mains frequency.

It is recommended to deactivate control of the internal VSD plus slippage or load compensation since they might adversely effect speed control in the VSD module.

17.1.3 Configuration of speed acquisition

The speed sensor to be used must be an inductive sensor (Namur or open collector (pnp) (refer to subsection Inputs / Outputs). The motor speed is acquired with an asymmetric sensor disk having 3 protrusions spaced at 60°, 120° and 180° respectively. The number of protrusions must be appropriately parameterized. The sensor disk is to be fitted such that the pulse intervals are generated in the direction of rotation as described.

Since the different types of motors have different maximum speeds, the VSD module must know the speed that corresponds to 100 %.

Parameter	*Num Puls per R*

Standardization

Since the standardized speed is difficult to adjust – but the correct adjustment has a great impact on the control performance of the VSD module – an automatic measurement function has been implemented.

Note

- The speed should be standardized in standby mode.
- The speed will not be standardized when parameter *VSD* is *deactivated*
- For speed standardization to start, both safety loop and burner flange contact must be closed

When activating this function, the air actuators (all actuators parameterized for determining the amount of air) will first be driven to the prepurge position. The prepurge position of the air actuators / actuators determining the amount of air should be adjusted such that the damper is fully open.

This action can be watched on the menu «Ratio Control» → «Settings» → «Gas / Oil» → «Curve Parameters»

Then, the VSD will be controlled at 95 %. A reserve of 5 % is left, enabling the VSD module to safely reach the 100 % speed in situations where environmental conditions may change. Once the motor speed has stabilized, that speed will then be standardized. In other words, that speed will represent 100 %. That speed can be read using parameter «StandardizedSp».

«StandardizedSp» should not be parameterized manually.

Note

If, based on the steps described above, the burner's rated output cannot be reached (the fan is controlled at 47.5 Hz), proceed as follows:

- Set the maximum frequency to 105.2 % of the motor's nominal speed
  This means that at a motor frequency of 50 Hz:
  Parameterize the maximum frequency of the VSD to 50 Hz • 1.052 = 52.6 Hz (on the VSD)
- Then, standardize

This standardization cannot lead to motor overloads since only 95 % of the maximum control signal is delivered during standardization and the actual speed will be controlled later in operation and monitored with «Safety time ratio control».

If automatic speed standardization is activated, or if the standardized speed is changed, the burner must be readjusted! Any change to the standardized speed changes the assignment between the parameterized percentages on the curves and the speed.

Parameter	*Standard (deactivated / activated)*
	StandardizedSp

Settling time

If oscillations occur during extensive running times, the settling time between acceleration ramp and speed measurement can be extended to overcome the problem.

Parameter	*Settling Time (in x • 25 ms) → Value of 16 means 16 • 25 ms = 400 ms (0.4 s)*

17.1.4 Configuration of current interface

The VSD is controlled via a current interface which can be switched from 0...20 mA to 4...20 mA, or vice versa.

Note

If the VSD requires an input signal of DC 0...10 V, a resistor of 500 Ω ±1 % must be connected parallel to its input.

17.1.5 Configuration of fuel meter

The module can be used with fuel meters having a Namur or Reed output or open collector (pnp).
To be able to adapt the module to different types of meters, the number of pulses corresponding to a volume unit must be parameterized in the system.
The setting requires 4 or 5 decimal points. If one of these values shall be changed, the following setting procedure is required on the following menu:

«Params & Display» → «VSD Module» → «Configuration» → «Fuel Meter»
→ «Pulse Value **Gas**» or
«Params & Display» → «VSD Module» → «Configuration» → «Fuel Meter»
→ «Pulse Value **Oil**»

The pointer indicates the unit to be selected (1 m^3 / 1ft^3)

Parameter	*Analog Output (0...20 mA / 4...20 mA)*

Pulse value gas

P	**u**	**l**	**s**	**e**	**V**	**a**	**l**	**u**	**e**	**G**	**a**	**s**			
C	**u**	**r**	**r**	**:**				**3**	**.**	**0**	**0**	**0**	**0**		
1	**m**	**3**		**=**				**3**	**.**	**0**	**0**	**0**	**0**		

The proposed unit can be changed with **Select**.
When pressing **Enter**, the pointer jumps to the first position of the display section with the numbers.

P	**u**	**l**	**s**	**e**	**V**	**a**	**l**	**u**	**e**	**G**	**a**	**s**			
C	**u**	**r**	**r**	**:**				**3**	**.**	**0**	**0**	**0**	**0**		
1	**m**	**3**		**=**				**3**	**.**	**0**	**0**	**0**	**0**		

Select can be used to change the digit with the highest value of the numerical number, or **Enter** can be pressed to switch to the next digit.
After selecting the last decimal place and pressing **Enter**, the value will be adopted.
After selecting the last decimal place and pressing **Enter**, the value will be adopted.

Pulse value oil

The setting procedure for «Pulse Value Gas», the selectable units being 1 l or 1 gal.

17.1.6 Fuel meter readings

The VSD module ascertains the cumulated gas or oil throughout. For each type of fuel, there is one resettable and one nonresettable meter available.

When resetting the fuel meters, the reset date will be stored.

The system continuously calculates the throughput of the selected type of fuel. The calculation time is dynamic and reaches from 1 to 10 seconds.
If the meter delivers no pulse for 10 seconds, the throughput displayed will be «0». This means that with minimum throughput, the sensor's pulse frequency should be a minimum of 0.1 Hz.
The display is smoothed.
The maximum frequency is 300 Hz when fuel throughput is at its maximum.

Parameter	*Volume Gas*
	Volume Oil
	Volume Gas R
	Volume Oil R
	Reset DateGas
	Reset DateOil
	Curr Flow Rate

17.1.7 Process data

In its operating position, the VSD module records data that show how well the system components work together (LMV52.2..., VSD module, VSD, motor and basic unit). These data can only be read.
The «Maximum static deviation» indicates the greatest speed deviation that occurred during a drive command in modulating operation. This means that the deviation indicated is the maximum difference that has been measured during an individual run.

The «Maximum dynamic deviation» indicates the greatest speed deviation between the ramp predefined by the VSD module and the measured speed. This gives the existing maximum deviation between the expected speed and the speed currently measured. Hence, control of the fan motor by the VSD lags behind the presetting in terms of time or amount or, in other words, the VSD is not capable of exactly following the presetting. This does not necessarily represent a problem if *Num Dev > 0.5%* contains only a few entries, or no entries at all.

In addition, the number of «static deviations» > 0.3 % or > 0.5 % will be counted. This gives the number of speed deviations above 0.3 % or 0.5 % that occurred during a drive command.
The number of deviations > 0.5 % also corresponds to the number of correcting cycles.

The process data will only be stored in RAM, which means that they will be reset via reset or lockout reset.

Note

Procedure in case the values are too high!

Great dynamic deviation:
- If no entries or only a few entries have been made at *Num Dev > 0.5%,* the value is of no importance. It only shows that at the beginning of speed readjustment, the fan motor will probably follow the readjustment with a certain delay
- For *Num Dev > 0.5%,* refer to *Max Stat Dev*

Great static deviation and mostly a large number of entries at *Num Dev > 0.5%*:
- The VSD is not able to readjust the fan motor's speed in accordance with the VSD module's presetting

This problem can be solved by increasing the ramp time on the LMV5… or by decreasing the ramp time on the VSD (provided the VSD is powerful enough, also refer to subsection «Configuring the VSD»).

If the display of the actual speed (AZL52…, ACS450 or on the VSD itself) gives the impression that the speed oscillates or lags behind, an internal control algorithm in the VSD is possibly active (slippage compensation or load compensation), counteracting speed control in the VSD module. Deactivation of these functions can solve the problem.

Parameter	*Max Stat Dev*
	Max Dyn Dev
	Num Dev >0.3%
	Num Dev >0.5%

17.2 Differences to LMV51.200..., LMV51.0x0… / LMV51.1x0…

6.3.1 Menu structure

Special functions Curve settings for electronic fuel / air ratio control

Selection of 1) will take you to:
S e l e c t i o n m e n u « G a s S e t t i n g s »
Only the data associated with the currently active type of fuel can be parameterized.

S	p	e	c	i	a	l	P	o	s	i	t	i	o	n	s	1)
C	u	r	v	e		P	a	r	a	m						2)
L	o	a	d		L	i	m	i	t	s						3)
A	u	x	A	c	t	u	a	t	o	r						4)

Selection of 1) (*Home Pos, Prepurge Pos*...), 3) and 4) will take you to the standard parameterizations of the specified parameters.

Selection of 4) will take you to:
S t a n d a r d p a r a m e t e r i z a t i o n « A u x i l i a r y A c t u a t o r »
Here, the function of the auxiliary actuator can be separately selected for each type of fuel: deactivated / activeDamper / VSD active.

A	u	x	A	c	t	u	a	t	o	r					
C	u	r	r	:	d	e	a	c	t	i	v	a	t	e	d
N	e	w	:		V	S	D		a	c	t	i	v	a	t

With «VSD active», the VSD takes the place of the auxiliary actuator (menus «Aux Actuator», «Auxiliary»). The available setting values reach from 0 to 100 %.

6.3.2 Changes when setting fuel / air ratio control via manual control

The system extrapolates the VSD to a minimum speed of **10 %** and a maximum speed of 100 %.

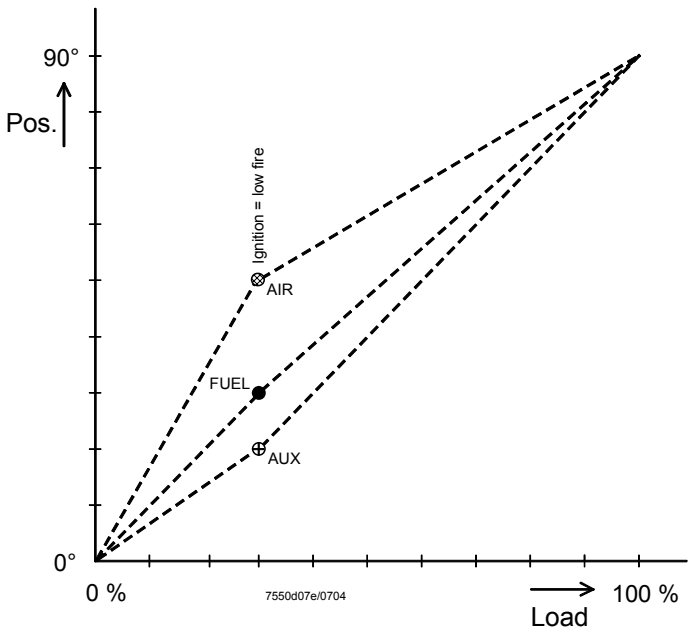

Change of load / position resulting from an automatically entered point

17.3 EMC: LMV5... system – VSD

The functional and EMC tests of the LMV5... system were conducted and successfully completed with the following types of VSD:

Siemens: - Micromaster 440
Danfoss: - VT2807

In operation, VSDs produce electromagnetic interference. For this reason - to ensure EMC of the entire system - the instructions provided by the manufacturers must be observed:

Siemens: - Operating Instructions
→ EMC-compatible installation

Danfoss:
- Technical Brochure → Radio Interference Suppression Filters
- Data Sheet of Danfoss EMC filter for long motor cables

When using other types of VSD, compliance with EMC regulations and correct functioning are not ensured!

17.4 Connection terminals

Also refer to chapter Connection terminals / coding of connectors.

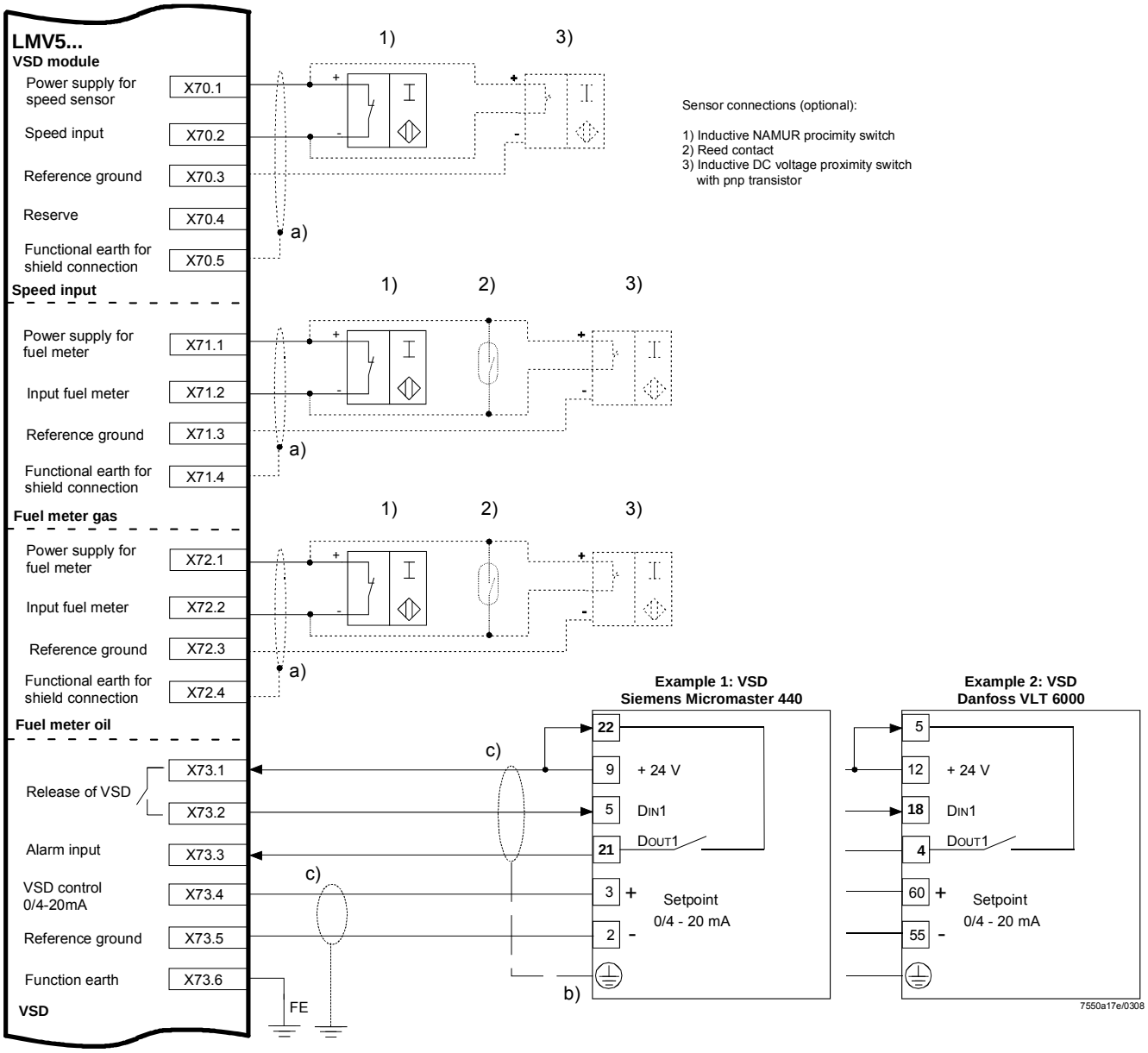

Shielding:

a) + b)	Optional shield connection for rough environmental conditions
b)	For shielding the cables on the VSD, refer to the following pieces of documentation: • User Documentation A7550.2 Micromaster User Manual 6SE6400-5AW00-0BP0 • Danfoss Operating Instructions VLT 6000 (MG60A703), chapter «Installation»
c)	• Alternative connection of VSD, refer to documentation of used VSD

17.5 Description of the connection terminals for the VSD module

Terminal designation	Connection symbol		Input	Output	Description of connection terminals	Electrical rating
X70	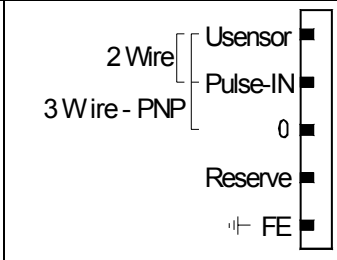	PIN1		x	Power supply for speed sensor	Approx. DC 10 V max. 45 mA
		PIN2	x		Speed input	Uin max = DC 10 V Uin min high level = DC 3 V Uin max low level = DC 1.5 V
		PIN3		x	Reference ground	
		PIN4			Reserve	
		PIN5	x		Functional earth for shield connection	
X71	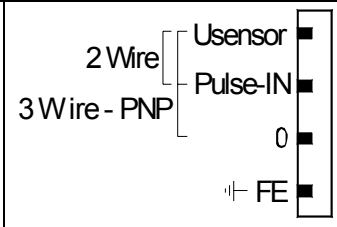	PIN1		x	Power supply for fuel meter	Approx. DC 10 V max. 45 mA
		PIN2	x		Fuel meter input gas	Uin max = DC 10 V Uin min high level = DC 3 V Uin max low level = DC 1.5 V
		PIN3		x	Reference ground	
		PIN4	x		Functional earth for shield connection	
X72	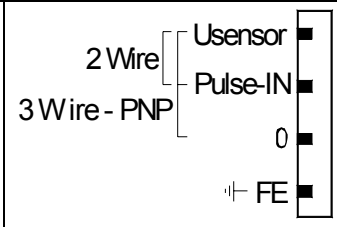	PIN1		x	Power supply for fuel meter	Approx. DC 10 V max. 45 mA
		PIN2	x		Fuel meter input oil	Uin max = DC 10 V Uin min high level = DC 3 V Uin max low level = DC 1.5 V
		PIN3		x	Reference ground	
		PIN4	x		Functional earth for shield connection	
X73	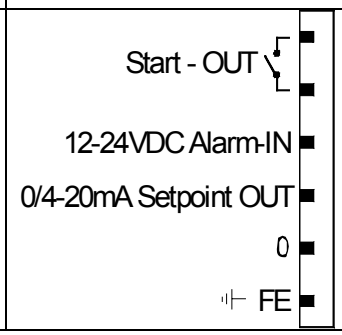	PIN1		x	Reference contact	Max. AC / DC 24 V max. 2 A
		PIN2		x	Release contact	
		PIN3	x		Alarm input	DC 0...24 V
		PIN4		x	0 / 4...20 mA control of VSD	0...20 mA RLmax = 750 Ω
		PIN5		x	Reference ground	
		PIN6	x		Functional earth	

18 Addendum 4: LMV52... with O2 trim control and O2 module

18.1 General

The LMV52... system is an extended LMV51... system. A special feature of the LMV52… is control of the residual oxygen content to increase the boiler's efficiency.

In addition to the features of the LMV51..., the LMV52... provides O2 trim control, control of a maximum of 6 actuators, control of a VSD, and acquisition of cumulated fuel consumption and current fuel throughput. The LMV52... system uses an O2 sensor (QGO20...), an external O2 module, and the standard components of the LMV51... system.

The PLL... O2 module is a detached measuring module for the QGO20... sensor and for 2 temperature sensors (Pt1000 / LG-Ni 1000). The module communicates with the LMV52… via CAN bus.

The fuel meters must be connected directly to the fuel-related inputs of the basic unit. On the AZL5... display and operating unit, the individual consumption values can be read out and the meter readings can be reset.

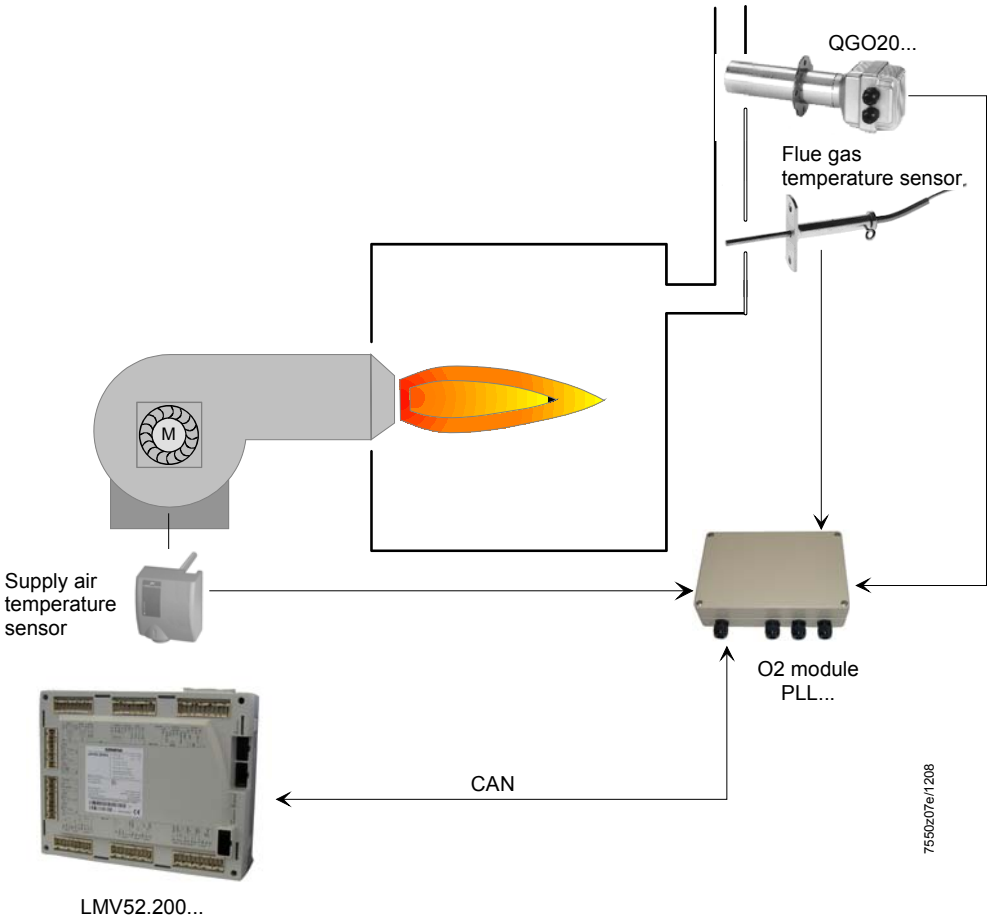

18.2 Functioning principle of O2 trim control

The residual oxygen control system reduces the amount of combustion air depending on the control differential (O2 setpoint minus actual O2 value). The amount of combustion air is normally influenced by several actuators and, if used, by a VSD. **Reduction of the amount of air is reached by reducing the «air rate» of the air-influencing actuators.** For that purpose, the damper positions of these actuators are calculated from some other load point on the fuel / air ratio curves. Hence, due to the parameterized ratio curves, the air-influencing actuators are in a fixed relation to one another.

O2 trim control is supported by **precontrol,** which calculates the air rate reduction in a way that the controller calls for the same manipulated variable as long as environmental conditions do not change, irrespective of burner output. Consideration is given to a number of measured values that are ascertained when the burner is set. This means that the controller must only become active when environmental conditions (temperature, pressure) change, and not when the burner load changes.

18.2.1 Air rate reduction

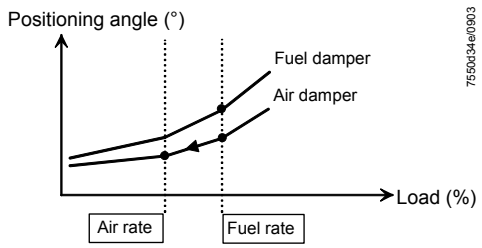

Due to the air rate reduction, the O2 controller reduces the amount of air. For that purpose, the air-influencing actuators will travel to a smaller load (air rate) on the fuel / air ratio curve. On the ratio curve, fuel rate and air rate are the same.

Example: If the air rate is 50 % of the fuel rate, half the amount of air is delivered to the burner (if λ is the same at all curvepoints) compared to the ratio curve.

18.2.2 Definition of O2 setpoint

Using the fuel / air ratio curve as a basis, the O2 setpoint is set by manually lowering the air rate.

⇒ The system stores the O2 ratio value, the O2 setpoint and the relative air rate reduction (standardized value required to attain the O2 setpoint).

> *Example:*
> With a relative air rate reduction of 10 %, the air rate must be changed by 6 percentage points from 60 % to 54 %.

By measuring both O2 values and by having the relative air rate reduction required for the readjustment, the system identifies the burner's behavior. Effects such as the fan pressure's impact on the amount of gas are taken into consideration.

18.2.3 Lambda factor

The system calculates the lambda factor from the O2 ratio value, the O2 setpoint and the required air rate reduction (standardized value to attain the O2 setpoint). The lambda factor reflects the ratio of the actual lambda change and the theoretical lambda change, in relation to a change of the air rate.

With an ideal burner, a relative air rate reduction of 10 % produces a lambda change of $\lambda Theorie = \frac{\lambda neu}{\lambda alt} = 0{,}9$

corresponding to a lambda factor of 1.

Example:

If the amount of gas is influenced by the fan pressure, a reduction of the air volume can simultaneously lead to an increase in the amount of gas. In practice, this results in a more pronounced change of the lambda value. If the change of lambda value is twice the theoretical value, an air rate change of 10 % produces

a value of $\lambda Praxis = \frac{\lambda neu}{\lambda alt} = 0{,}8$, corresponding to a lambda factor of 2.

From the lambda values of the ratio curve, the setpoint curve and the standardized value (required air ratio reduction), the lambda factor is calculated as follows:

$$Lambdafaktor = \frac{\lambda Soll - \lambda Verbund}{Normierwert} \bullet 100$$

The system should be adjusted such that the lambda factor across the load range will be as flat as possible. In the future, this can be checked with the ACS450 PC tool. Without the tool, the lambda factors can be calculated according to the above formula to be entered in a graph.

18.3 Precontrol

As a result of the measurements made when setting the O2 setpoint, the properties and the behavior of the burner will be acquired. Based on the type of fuel, the O2 ratio, the O2 setpoint and the standardized value, precontrol calculates the air rate in a way that the O2 setpoint will be reached as long as the environmental conditions do not change, irrespective of burner output.
Calculation of the air rate from the manipulated variable is made such that a manipulated variable of +10 % will offset an air density change of –10 %.

18.3.1 Calculation of precontrol

Based on the settings for O2 trim control, the system becomes familiar with the characteristics and behavior of the burner. The lambda factor, which is taken into consideration when calculating the air rate reduction, reflects these values which are gained from practical experience.

Precontrol can be calculated in 2 different ways:

like Pair The measured lambda factor is also considered when air density (temperature pressure) changes. Air pressure and air density have an impact on the fuel throughput.

like theory The measured lambda factor is not considered when air density (temperature pressure) changes. Air pressure and air density have no impact on the fuel throughput.

Recommendation:

With gas: *like Pair*

With oil: *like theory*

Parameter	*Type Air Change (like P air, like theory)*

18.4 O2 trim control

18.4.1 Operating modes of O2 controller / O2 monitor

The O2 controller or O2 monitor can be deactivated or activated in various operating modes by setting a parameter.

The ratio curves must always be adjusted such that there are sufficient amounts of excess O2 available, irrespective of environmental conditions!

man deact — Both the O2 controller and O2 monitor are deactivated. The system operates along the parameterized ratio curves.

O2-guard — Only the O2 monitor is active. Prior to startup, the O2 sensor must have reached its operating temperature. If not, startup will be prevented. If the O2 monitor responds, or if an error occurs in connection with O2 measurement, the O2 module or the O2 sensor, safety shutdown will take place, followed by a repetition if possible, otherwise lockout.

O2-control — Both the O2 controller and the O2 monitor are active. Prior to startup, the O2 sensor must have reached its operating temperature. If not, startup will be prevented. If the O2 monitor responds, or if an error occurs in connection with O2 measurement, the O2 module or the O2 sensor, safety shutdown will take place, followed by a repetition if possible, otherwise lockout.

conAutoDeac — Both the O2 controller and the O2 monitor are active (option «automatic deactivation»). Startup takes place before the O2 sensor has reached its operating temperature. O2 trim control in operation is activated only when the operating temperature has been reached and the sensor test has been successfully completed. If the O2 monitor responds, or if an error occurs in connection with O2 measurement, the O2 module, the O2 sensor or the sensor test, both the O2 controller and the O2 monitor will automatically be deactivated.

The system operates along the parameterized ratio curves and this parameter will be set to *auto deact*. The AZL5... indicates automatic deactivation. The error code is maintained until O2 trim control is manually deactivated or activated.

auto deact — O2 trim control has automatically been deactivated and the system operates along the parameterized ratio curves (do not select this system parameter). To deactivate the O2 controller / O2 monitor, use parameter setting «man deact».

Also refer to section 18.4.4 Heating up the O2 sensor after «PowerOn».

Parameter	*O2 Ctrl/Guard (man deact / O2-guard / O2-control /conAutoDeac / auto deact)*

18.4.2 Load limitation with O2 trim control

O2 trim control can be deactivated below an adjustable load limit. This can be selected separately for gas- and oil-firing.

If the load drops below this limit, O2 trim control will be deactivated and the system operates along the parameterized ratio curves. If the load increases and exceeds the O2 trim control threshold by 5 percentage points, the O2 controller will be reinitialized.

Parameter	*O2CtrlThreshold*

18.4.3 Startup

With the parameter setting
startup will be prevented until the O2 sensor has reached its operating temperature.

With the parameter setting
starts the burner directly, O2 trim control will be activated only when the operating temperature has been reached and sensor test has been successful.

Also refer to section Heating up the O2 sensor after «PowerOn».

Parameter	*O2 CtrlThreshold*
	O2Ctrl/Guard (O2-guard / O2-control)
	O2Ctrl/Guard (conAutoDeac)

18.4.4 Heating up the O2 sensor after «PowerOn»

When the system or the O2 module is switched on for the first time, the cold O2 sensor is slowly heated up until its operating temperature is reached. **When that temperature is reached,** the sensor needs **another 10 minutes** to attain its maximum temperature.

With the parameter setting
start prevention will take place until the O2 sensor has fully assumed its operating temperature, followed by burner startup. O2 trim control in the operating position will be activated the moment the controller locking time has elapsed.

With parameter setting
the burner will immediately be started up. O2 trim control in the operating position will only take place when the sensor has fully assumed its operating temperature and after the sensor test has been successfully completed.

Parameter	*O2Ctrl/Guard (O2-guard / O2-control)*
	O2Ctrl/Guard (conAutoDeac)

18.4.5 Initializing the O2 controller

The system is put into operation with the O2 controller disabled (safe ratio curve). **Locking time startup** commences when entering the operating phase. This locking time is 10* **Tau low-fire**. On completion of this **locking time startup**, the dynamic release criterion of operation applies (refer to section *Behavior in the event of load changes*). When the above mentioned release criteria are satisfied, the O2 controller will be initialized. For initialization, the currently measured O2 value and the setting values are used to calculate the manipulated variable (influencing variable initialization). The manipulated variable is increased in a way that, after initialization, the O2 value will be about 0.7 % higher than the O2 setpoint.

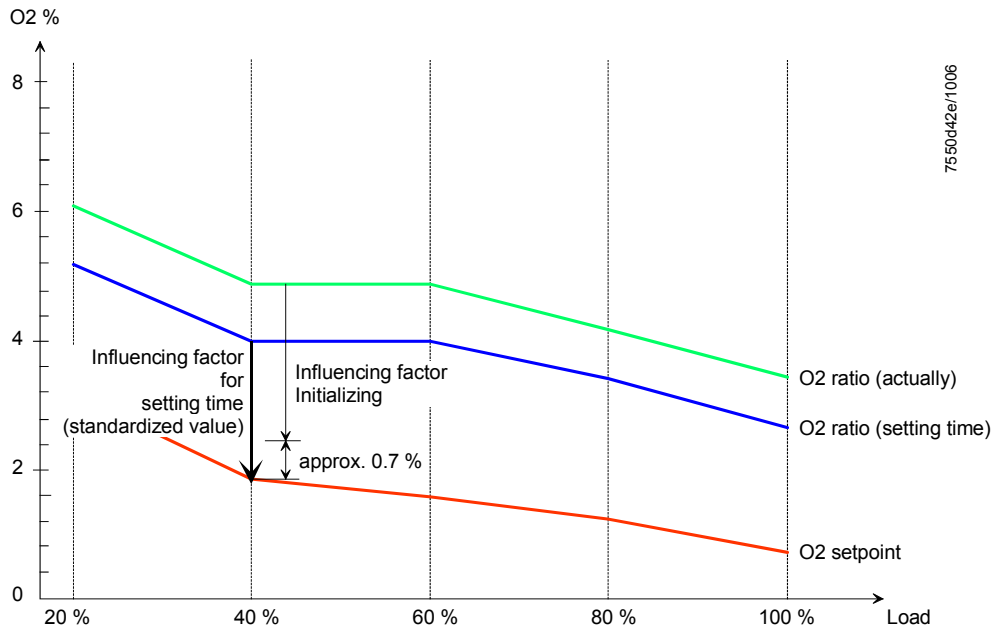

18.4.6 Behavior in the event of load changes

If the system identifies a load change, the O2 controller will be disabled.

Release criterion:

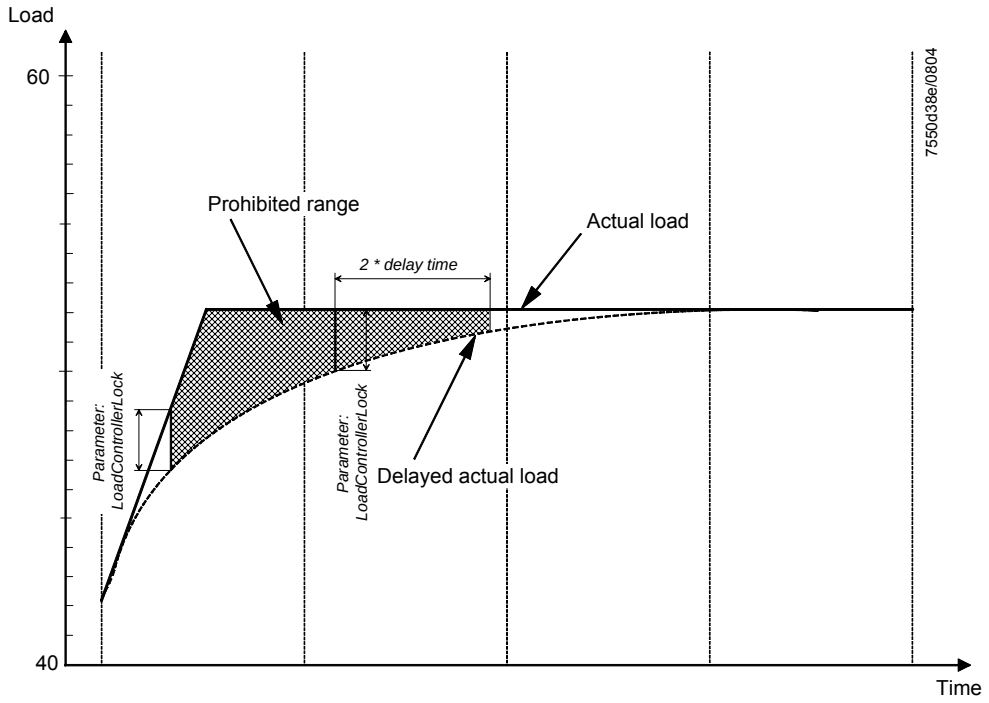

As illustrated above, based on the actual load, a ”delayed actual load“ will be mapped. This delayed actual load reflects the delay of the flue gas values resulting from the inertia of boiler operation. If the load difference between actual load and delayed actual load exceeds a certain adjustable limit, a load change will be detected. When the differential drops below the limit again, another waiting time of 2 * delay time will be added before the controller is enabled.

The limit value of the load difference can be set by the user via parameter *LoadCtrlSuspend*:
Setting range 0-25 %; presetting: 5 %; access level: Service

The resulting actual load is generated via a PT1 unit with an adjustable time constant using parameter *FilterTimeLoad*:

Setting range 4-10; presetting: 5 ⇒ 5 * τ; access level: Service

The parameter denotes the period of time on completion of which the next load change in the form of *LoadCtrlSuspend* can be made. If a load change is detected, the O2 value will be increased (offset).

Parameter	*LoadCtrlSuspend*
	FilterTimeLoad

18.4.7 Increasing the manipulated variable in the case of a load change (offset)

When changing the load under unfavorable setting conditions, it could happen that the actual O2 value will drop below the O2-min-limit. To prevent this, the user can parameterize an increase of the O2 value in the event of load changes.
The parameter will define the increase of the O2 value in %. The increase is made in relation to the setpoint.

Example:
O2 offset oil = 0.5 %, setpoint 1.4 % ⇨ In the event of a load change, the O2 value reached will be 1.9 %.

The increase is made via the controller's manipulated variable. The current O2 value is considered when calculating the increase.

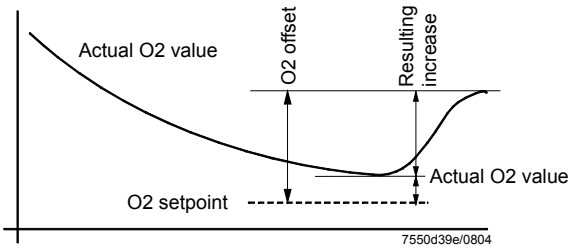

There is only 1 increase of the O2 value per load change. The next increase will only be possible on completion of the locking time for the load change.

There will be no increase of the O2 value when O2 trim control is deactivated.

When firing on oil:

Parameter	*O2 OffsetOil*

When firing on gas:

Parameter	*O2 OffsetGas*

18.4.8 Control interventions by the O2 controller

To prevent the burner from getting insufficient amounts of air when the load changes, the O2 controller has additional means for counteracting. These become active if the O2 controller or precontrol is not optimally adjusted, or if the burner's behavior cannot be adequately mapped by the measured values. The control interventions are also active during the controller locking time.

If the O2 value drops below the setpoint in the direction of the O2 min. value, the manipulated variable will be abruptly increased if predefined thresholds are exceeded ⇒ more air supply:

Example:

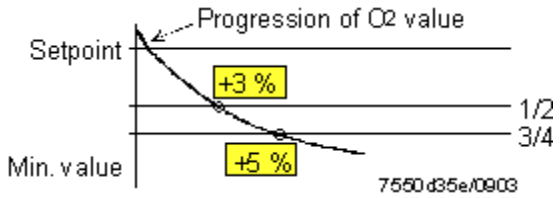

a) O2 value exceeds ½ of the differential between setpoint and min. value → manipulated variable is increased by 3 %
b) O2 value exceeds ¾ of the differential between setpoint and min. value → manipulated variable is increased by 5 %

For the control interventions – using a software timing element PT1 – the setpoints and O2 min. values will be delayed by the time constant Tau acquired during adaption. This allows the actual O2 value (corresponding to a combustion value from the past as a result of the boiler running time) to be compared with the associated setpoints and min. values.
Also refer to section 18.5.1 Delayed O2.

18.5 O2 monitor

The O2 monitor can be used with or without O2 trim control. When O2 trim control is activated, the O2 monitor will automatically become active.

18.5.1 Delayed O2 min. value

Due to the long time it takes the flue gases to pass through the boiler's flueways, the O2 value currently acquired is delayed compared to the residual oxygen content occurring the same moment in the combustion chamber. To prevent O2 min. values from being compared with "old" O2 values, the O2 min. values used by the O2 monitor are delayed by Tau as acquired during adaption, using a software timing element PT1.

18.5.2 Switch-off criteria

If

a) the actual O2 value falls for > 3 seconds below the O2 min. value delayed via the PT1 timing element, or
b) the actual O2 value falls for > 3 seconds below the smallest parameterized O2 min. value, one of the following reactions takes place, depending on the operating mode:

- Safety shutdown will take place, followed by a repetition if possible, otherwise lockout.
- O2 trim control will automatically be deactivated and the system operates along the parameterized ratio curves. O2 trim control must be manually reactivated.

Parameter	*O2Ctrl/Guard (O2-guard / O2-control)*
	O2Ctrl/Guard (conAutoDeac)

18.6 Self-test

During the startup phase and during operation, the system performs a number of self-tests to ensure that the O2 sensor is working correctly.

18.6.1 Sensor test

To detect aging O2 sensors, a sensor test is made. An aged measuring cell can be identified by its increased internal resistance. The cell is considered too old when the internal resistance measured is Ri < 5 Ω or Ri > 150 Ω.

The test is made at 23-hour intervals. To perform the test, a constant O2 value is essential. This requirement is satisfied after prepurging or when a stationary load point is reached. The system performs the test after 23 hours as soon as such stationary values are available. If this is not the case after 24 hours, the load will be “frozen“ in operation so that the test can be made. If the system is in standby mode, the test will be performed during the next startup phase (maximum 3 repetitions).

If the test is negative, the system’s response will be one of the following, depending on the parameter setting of «O2Ctrl/Guard»:

man deact (auto deact):	O2 controller and O2 monitor are deactivated. No sensor test will be made.
O2-guard / O2-control:	O2 controller / O2 monitor is / are activated. If the test is negative, safety shutdown will take place, followed by a repetition if possible, otherwise lockout.
conAutoDeact:	Both the O2 controller and the O2 monitor are activated. If the test is negative, O2 trim control will be deactivated and the burner will be started up without O2 trim control.

Parameter	*O2Ctrl/Guard (auto deact / man deact / O2-guard/ O2-control /conAutoDeact)*

18.6.2 Checking the O2 content (20.9 %)

Every time the burner is started up, the measured residual oxygen content is compared with the O2 content of the ambient air at the end of prepurging.

For that purpose, the prepurging time of the LMV52... must be parameterized such that the combustion chamber and the flueways will be completely purged.

Normally, this value reads 20.9 %, but it can be parameterized in the case of plants that operate with enriched air. This test detects offset errors of the measuring cell. For this reason, the correct setting of the air's O2 content is safety-related.

If the O2 content lies outside the tolerance band of ±2 %, one of the following reactions will take place, depending on the parameterization of «O2Ctrl/Guard»:

man deact (auto deact):	O2 controller and O2 monitor are deactivated. No O2 test will be made.
O2-guard / O2-control:	O2 controller / O2 monitor is / are activated. If the test is negative, safety shutdown will take place, followed by a repetition if possible, otherwise lockout.
conAutoDeac:	O2 controller and O2 monitor are activated. Option is «automatic deactivation». If the test is negative, both the O2 controller and the O2 monitor will be deactivated. The burner will be started up without O2 trim control.

Parameter	*O2 Content Air*
	O2Ctrl/Guard (auto deact / man deact / O2-guard / O2-control /conAutoDeac)

18.7 Auxiliary functions

18.7.1 Warning when flue gas temperature is too high

If a flue gas temperature sensor is connected and activated, a warning is delivered in case the adjusted flue gas temperature is exceeded. Excessive flue gas temperatures are an indicator of increased boiler losses ⇒ boiler should be cleaned. The warning threshold for gas- and oil-firing can be set separately.

Parameter	*MaxTempFlueGas Gas*
	MaxTempFlueGas Oil

18.7.2 Combustion efficiency

If an O2 sensor, a combustion air and flue gas temperature sensor is connected and activated, the combustion efficiency will be calculated and displayed.

To ensure that the calculation will be made correctly, the fuel parameters must be selected and set in accordance with the type of fuel burnt.
Also refer to section Parameterization of type of fuel.

The calculation is made according to the following formula (1. BimSchV = 1. Bundes-Imissionsschutzverordnung = First Federal Imission Protection Decree):

Flue gas volume ratio:

$$AVft = \frac{V_afNmin}{V_atrNmin}$$

O2 value dry:

$$O2_tr = \frac{AVft \bullet O2ContentAir}{\frac{O2ContentAir}{O2Value_Wet} + AVft - 1}$$

Flue gas losses:

$$qa = \left(\frac{A2}{O2ContentAir - O2_tr} + B \right) \bullet \left(\vartheta_{flue\,gas} - \vartheta_{supply\,air} \right)$$

Efficiency:

$$\eta_F = 100\% - qa$$

Parameter	*Combustion air temperature sensor (NoSensor, Pt1000, LG-Ni1000)*
	Flue gas temperature sensor (NoSensor, Pt1000, LG-Ni1000)

18.8 O2 module

In comparison with the LMV51... system, the extra components to be connected with the LMV52… system are the O2 module and the O2 sensor QGO... and, optionally, the combustion air and flue gas temperature sensors. The O2 module is to be connected to the basic unit via the CAN bus. The O2 module must be located in the vicinity of the QGO... (< 10 m), aimed at keeping interference on the sensitive detector lines as low as possible. For sensor heating, the O2 module requires a separate mains connection facility.

18.8.1 Inputs and outputs

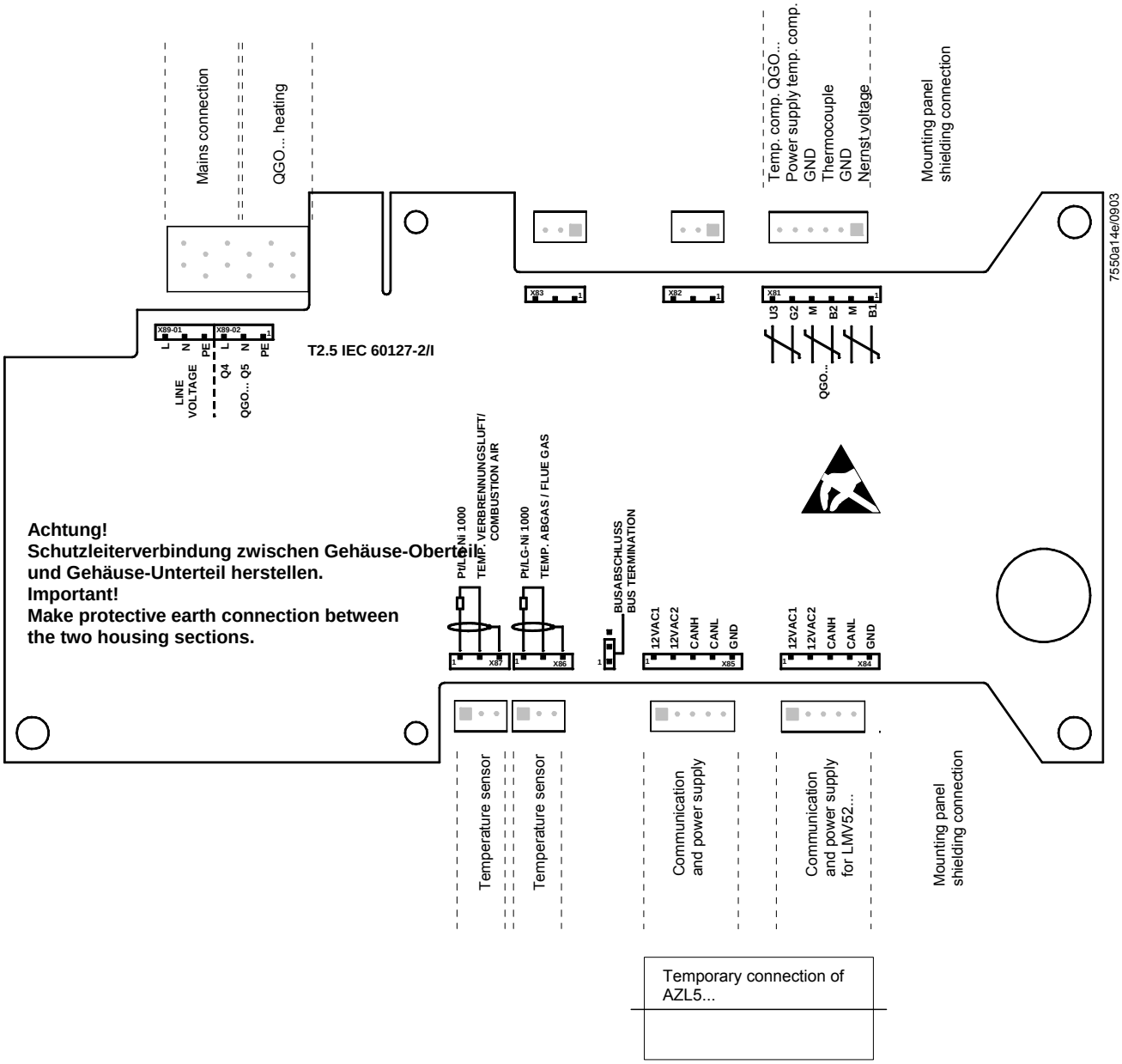

Terminal designation	Connection symbol		Eingang	Ausgang	Description of connection	Electrical limit values
X81	PIN 6		x		Temperature compensation QGO... (U3)	DC [0...2 V], Ri > 100 kΩ
	PIN 5			x	Power supply temperature compensation (G2)	DC [12...18 V], Ra = 20 Ω
	PIN 4		x	x	GND (M)	
	PIN 3		x		Thermocouple (B2)	DC [0...33 mV], Ri > 100 kΩ
	PIN 2		x	x	GND (M)	
	PIN 1		x		Nernst voltage (B1)	DC [-25...1 mV], Ri > 100 kΩ

X84	PIN 5	GND	x		Signal reference	
	PIN 4	CANL	x		Communication signal	DC U <= 5 V, Rw = 120 Ω, Level to ISO-DIS 11898
	PIN 3	CANH	x		Communication signal	
	PIN 2	12VAC2	x		AC supply for O2 module	AC12V +10%/-15%, 50...60 Hz, Fuse max. 4 A
	PIN 1	12VAC1	x		AC supply for O2 module	

X85	PIN 5	GND	x		Signal reference	
	PIN 4	CANL	x		Communication signal	DC U <= 5 V, Rw = 120 Ω, Level to ISO-DIS 11898
	PIN 3	CANH	x		Communication signal	
	PIN 2	12VAC2	x		AC supply for O2 module	AC12V +10%/-15%, 50...60 Hz, Fuse max. 4 A
	PIN 1	12VAC1	x		AC supply for O2 module	

Combustion air / flue gas temperature sensor

X86	PIN 3		x		Shield connection	
	PIN 2		x		Signal reference	
	PIN 1		x		Flue gas temperature sensor input Pt1000 / LG-Ni 1000	

X87	PIN 3		x		Shield connection	
	PIN 2		x		Signal reference	
	PIN 1		x		Combustion air temperature input Pt1000 / LG-Ni 1000	

X89-02	PIN 1	PE		x	Protective earth	
	PIN 2	Q5 N		x	QGO... heating N	
	PIN 3	Q4 L		x	QGO... heating	At AC 120 V +10 %/-15 %, 50...60 Hz, Imax. 2.5 A At AC 230 V +10 %/-15 %, 50...60 Hz, Imax. 2.5 A
X89-01	PIN 4	PE	x		Protective earth	
	PIN 5	N	x		Power supply neutral conductors	
	PIN 6	L	x		Power supply live conductor	AC230V +10%/-15%, 50...60Hz, Imax. 2.5 A

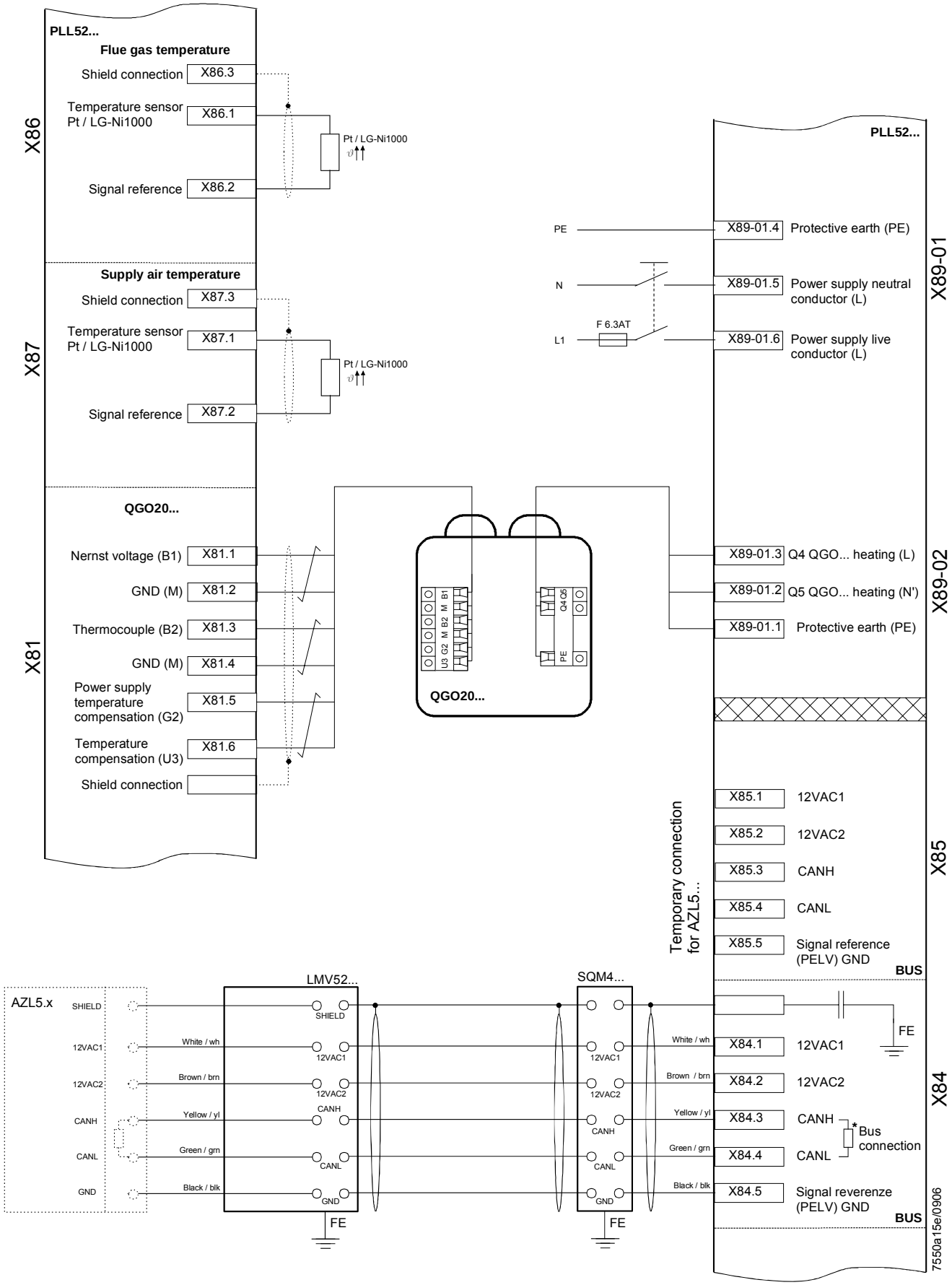
PLL52...
Flue gas temperature
Shield connection
X86.3
Temperature sensor Pt / LG-Ni1000
X86.1
Signal reference
X86.2
X86
Pt / LG-Ni1000
Supply air temperature
Shield connection
X87.3
Temperature sensor Pt / LG-Ni1000
X87.1
Signal reference
X87.2
X87
QGO20...
Nernst voltage (B1)
X81.1
GND (M)
X81.2
Thermocouple (B2)
X81.3
GND (M)
X81.4
Power supply temperature compensation (G2)
X81.5
Temperature compensation (U3)
X81.6
Shield connection
X81
QGO20...
PLL52...
PE
X89-01.4
Protective earth (PE)
N
X89-01.5
Power supply neutral conductor (L)
L1
F 6.3AT
X89-01.6
Power supply live conductor (L)
X89-01
X89-01.3
Q4 QGO... heating (L)
X89-01.2
Q5 QGO... heating (N')
X89-01.1
Protective earth (PE)
X89-02
X85.1
12VAC1
X85.2
12VAC2
X85.3
CANH
X85.4
CANL
X85.5
Signal reference (PELV) GND
BUS
X85
Temporary connection for AZL5...
AZL5.x
SHIELD
12VAC1
12VAC2
CANH
CANL
GND
LMV52...
SQM4...
White / wh
Brown / brn
Yellow / yl
Green / grn
Black / blk
FE
X84.1
12VAC1
X84.2
12VAC2
X84.3
CANH
X84.4
CANL
Bus connection
X84.5
Signal reverenze (PELV) GND
BUS
X84
7550a15e/0906

18.8.2 CAN bus X84, X85

The O2 module is to be connected to the basic unit via CAN bus. There are 2 terminals for the CAN bus, X84 for the supply and X85 for the connection of the AZL5... If the O2 module is located at the end of the bus line, the CAN bus termination must be activated.

18.9 Configuration of O2 module

The connected sensors are to be configured via the AZL5...

The O2 sensor connected to terminals X81 / X89-02 must be parameterized.

Parameter	*O2 Sensor (NoSensor, QGO20)*

The combustion air temperature sensor connected to terminal X87 must be parameterized.

Parameter	*Combustion air temperature sensor (NoSensor, Pt1000, LG-Ni1000)*

The flue gas temperature sensor connected to terminal X86 must be parameterized.

Parameter	*Flue gas temperature sensor (NoSensor, Pt1000, LG-Ni1000)*

18.10 Configuration of the system

(Description of the plant-dependent basic configuration)

First, make all configurations as described in detail with the LMV51... system.

18.10.1 Actuators / VSDs

When activating the actuators / VSDs in menu section «RatioControl», parameterization comprises «Activation» and «Deactivation» and, in addition, «air influencing». Air-influencing actuators have an impact on the amount of air. The actuators defined as air-influencing actuators are used for O2 trim control. Basically, all actuators having an impact on the air volume are to be parameterized as «air-influencing». In exceptional cases, a truly air-influencing actuator can be excluded from O2 trim control by setting it to «activated».

If the parameterization is changed, O2 trim control must be readjusted.

deactivated: Actuator is not active.

activated: Actuator is active but has no impact on the air volume. Actuator is not used for O2 trim control.

air influen: Actuator is active and has an impact on the air volume. Actuator is used for O2 trim control.

Parameter	*Air actuator (deactivated, activated, air influen)*
	Auxiliary actuator 1 (deactivated, activated, air influen)
	Auxiliary actuator 2 (deactivated, activated, air influen)
	Auxiliary actuator 3 (deactivated, activated, air influen)
	VSD (deactivated, activated, air influen)

18.10.2 Parameterization of the type of fuel

For calculating precontrol and combustion efficiency, the type of fuel burnt must be selected.
Also refer to section Setting of air / ratio control..

For firing on gas, there are 4 preprogrammed fuel types available, plus 1 type of fuel that can be defined by the user.

For firing on oil, there are 2 preprogrammed types of fuel available, plus 1 type that can be defined by the user.

Parameter	*Type of Fuel (user def, naturalGasH, naturalGasL, propane, butane)*
	Type of Fuel (user def, LightOilLO, LightOilHO)

18.10.3 Setting the user-defined type of fuel

If, when firing on gas or oil, the user-defined fuel type is selected, the relevant fuel parameters must be manually set.

Parameter	*V_LNmin*

Amount of air required for stoichiometric combustion (λ = 1) [m³ air per m³ gas] or [m³ air per kg oil]. This value is used for calculating O2 trim control / precontrol.

Parameter	*V_afNmin*

Flue gas volume «wet» with stoichiometric combustion (λ = 1) in [m³ flue gas «wet» per m³ gas] or in [m³ flue gas «wet» per kg oil]. This value is used for calculating O2 trim control / precontrol or the combustion efficiency.

Parameter	*VatrNmin*

Flue gas volume «dry» with stoichiometric combustion (λ = 1) in [m³ flue gas «dry» per m³ gas] or in [m³ flue gas «dry» per kg oil]. This value is used for calculating O2 trim control / precontrol or the combustion efficiency.

Parameter	*A2*

This value is used for calculating the combustion efficiency. It is in compliance with the definition given in the first BimScHV.

Parameter	*B/1000*

This value is used for calculating the combustion efficiency. It is in compliance with the definition given in the first BimScHV. The parameters are set using a resolution of 1/1000. This means that a parameterized value of 8 corresponds to 0.008.

Preset fuel parameters

	Natural gas H	Natural gas L	Propane	Butane	Fuel oil EL	Fuel oil S
V_Lnmin	9.90	8.41	23.80	30.94	11.20	10.73
V_afNmin	10.93	9.43	25.80	33.44	12.02	11.39
VatrNmin	8.89	7.69	21.80	28.44	10.53	10.08
A2	0.66	0.66	0.63	0.63	0.68	0.68
B/1000	9 ≈ 0.009	9 ≈ 0.009	8 ≈ 0.008	8 ≈ 0.008	7 ≈ 0.007	7 ≈ 0.007

18.11 Commissioning the O2 trim control system

18.11.1 Setting ratio control

First, adjust the ratio curves as with the LMV51... system. The excess O2 rate must be selected high enough, ensuring that, irrespective of ambient conditions (combustion chamber and fuel pressure, temperature and pressure of the combustion air), **the O2 level will not fall below the O2 setpoint of O2 trim control.**

Parameterize the loads at the curvepoints proportional to the effective fuel rate (amount of fuel). For that purpose, ascertain the load with the help of the fuel counter.
The curvepoint identifies the smallest load where O2 trim control is still possible. In normal situations, this is the low-fire position. Point 1 defines the curve for reducing the air rate below point 2. If, in the low-fire position, no further air reduction is possible (e.g. because the air damper has already fully closed), curvepoint 1 must be selected as the low-fire point. In that case, O2 trim control will only be performed up to curvepoint 2.
The O2 ratio value between the curvepoints should be linear. When O2 trim control is activated, precontrol will transfer any nonlinearity to the actual O2 value. When adjusting the load, the actual O2 value fluctuates about the O2 setpoint. Check the linearity of the O2 progression by approaching the loads between the curvepoints. If the O2 ratio value has such nonlinearities, they can be corrected by setting intermediate curvepoints.
The more thoroughly the ratio curve is set, the easier the subsequent adjustment of O2 trim control, and the more accurate O2 trim control will be.

If the ratio curves are changed later, the O2 controller must also be readjusted.

18.11.2 Setting the O2 monitor

Next, the O2 monitor must be adjusted. When making the adjustment for the first time, the O2 monitor should remain deactivated to avoid undesired responses. When changing settings later, it can stay activated.

Set the O2 min. value as low as possible to ensure a high level of availability. The O2 min. value marks the boundary between the permanently non-hazardous range and the potentially hazardous range.

Above or at the O2 min. value, hazardous conditions must not constantly occur.

Guide values (for Europe): CO = 2,000 ppm, soot number 3.
The values vary, depending on the type of plant. They need to be checked.

After setting all O2 min. values, the O2 monitor can be activated.
The setting can be made in 2 different ways.

18.11.3 Direct entry of O2 min. values

If the limit values of a plant are known, and if the CO limit need not be remeasured, the O2 min. values can be entered directly.

P	o	i	n	t	:			2							
O	2	-	M	i	n	V	a	l	u	e	:		1	.	2
P	-	A	i	r		M	a	n			:		0	.	0

On the first line, «Point», select the point number to be changed and confirm with **Enter** (point 1 can be adjusted). With the second line, «O2 Min Value», the O2 min. value can be directly parameterized. The points will only be approached if, previously, setting choice «P-Air Man» has been used.

18.11.4 Measuring the O2 min. values by lowering the air rate

On the first line, select the point number and confirm with **Enter**. Now, select line «P-Air Man» and confirm. After confirmation with **Enter**, the fuel / air ratio control system approaches this point on the parameterized ratio curve, that is, air rate reduction «P-Air Man» will be set to «0». The display on the second line changes to «Actual O2 Value», which will then be displayed.

P	o	i	n	t	:			3							
A	c	t	O	2	V	a	l	u	e		:		1	.	4
P	-	A	i	r		M	a	n			:	2	1	.	3

By readjusting the air rate «P-Air Man», the amount of combustion air and thus the O2 value can be reduced. «P-Air Man» corresponds to the relative air rate reduction. During the readjustment, all actuators on the curve parameterized as air-influencing will travel to the relevant positions. When the O2 min. value is found, the measured «Actual O2 Value» will be entered as the «O2 Min Value» by pressing **Enter**.

18.11.5 Setting O2 trim control

Since with O2 trim control activated, the O2 monitor is always active also, the O2 monitor should already be set. For the initial setting, O2 trim control should remain deactivated, and the O2 monitor can be activated. Prior to setting the O2 controller, both fuel / air ratio control and the loads of the curvepoints should be correctly set. This facilitates correct functioning of precontrol. *Also refer to subsection Setting ratio control.*

If the fuel / air ratio curves are changed later, O2 trim control must also be readjusted.

It is important to make all settings of the O2 controller when environmental conditions do not change. For this reason, when making corrections later, all points must be set again. When setting O2 trim control, the user is guided through the necessary setting steps.

For adaption of the O2 controller during low-fire operation, the following parameter is available:

Parameter	*LowfireAdaptPtNo (2…high-fire point-1)*

This parameter is intended for plant where the flue gas speed at curvepoint 2 is too low to produce valid adaption values.

First, select the required curvepoint and confirm with **Enter** (curvepoints under *LowfireAdaptPtNo* cannot be set, since loads below *LowfireAdaptPtNo* cannot be approached with O2 trim control). The system approaches the selected point on the ratio curve.

P	o	i	n	t	:			2							
O	2	-	R	a	t	i	o	C	o	n	:	x	x	x	x
O	2		S	e	t	p	o	i	n	t	:	x	x	x	x
S	t	a	n	d	V	a	l				:	x	x	x	x

The display will change. During this step, the system acquires the O2 value on the ratio curve. The actual O2 value is displayed and the operator is prompted to confirm when a stable O2 value has been reached. This is important since the value is used for calculating precontrol. In the future, the PC tool will be useful for making checks.

P	o	i	n	t	:			2							
O	2	-	R	a	t	i	o	C	o	n	:		5	.	4
I	f		V	a	l	u	e		S	t	a	b	l	e	
C	o	n	t	i	n	u	e		W		E	n	t	e	r

Then, the measured O2 ratio value will be displayed. The pointer now indicates the standardized value. By changing this value, the relative amount of air will be reduced, whereby the standardized value corresponds to the relative air rate reduction. The standardized value is only changed until the actual O2 value reaches the required O2 setpoint, which is then displayed. The setting may only be confirmed after a constant O2 value has been attained. The PC tool will be useful for making checks.

P	o	i	n	t	:			2							
O	2	-	R	a	t	i	o	C	o	n	:		5	.	2
O	2	-	S	e	t	p	o	i	n	t	:		2	.	0
S	t	a	n	d	V	a	l				:	1	5	.	3

Now, the operator must decide whether he wants to adopt or discards the settings.

P	o	i	n	t											
S	t	o	r	e					-	>	E	N	T	E	R
C	a	n	c	e	l				-	>	E	S	C		

At curvepoint *LowfireAdaptPtNo* and at the highest curvepoint, system adaption takes place during the storage process. This is accomplished by measuring the delay time (τ) of the boiler plant. Based on these values, the PI control parameters, the controller locking time after load readjustment and the min. value delay for the O2 monitor will be calculated. To measure the time constant (τ), the burner will be driven back to the ratio curve. With the other curvepoints, the system returns to the ratio curve without adaption after setting the O2 setpoint. After setting all points, O2 trim control can be activated.

18.11.6 Checking and changing the controller parameters

The adapted controller parameters and the measured time constant (τ) of the boiler can be viewed on the «Controller parameters» menu, and changed, if required.
The O2 setpoint must lay at least 0.5 % above the O2 min. value and 1 % below the O2 ratio value.

18.12 Setting notes

(Summary of the most important rules for setting O2 trim control)

18.12.1 Parameter settings

- **Parameterize all truly air-influencing actuators as air-influencing actuators**
  If changing the parameter settings, O2 trim control must be readjusted.

18.12.2 Setting O2 ratio control

Set sufficient excess O2
Set the amount of excess air of the ratio curve such that, whatever the environmental conditions (combustion chamber and fuel pressure, temperature and pressure of the combustion air), the set residual oxygen content will lie above the O2 setpoints required by O2 trim control.

Example:

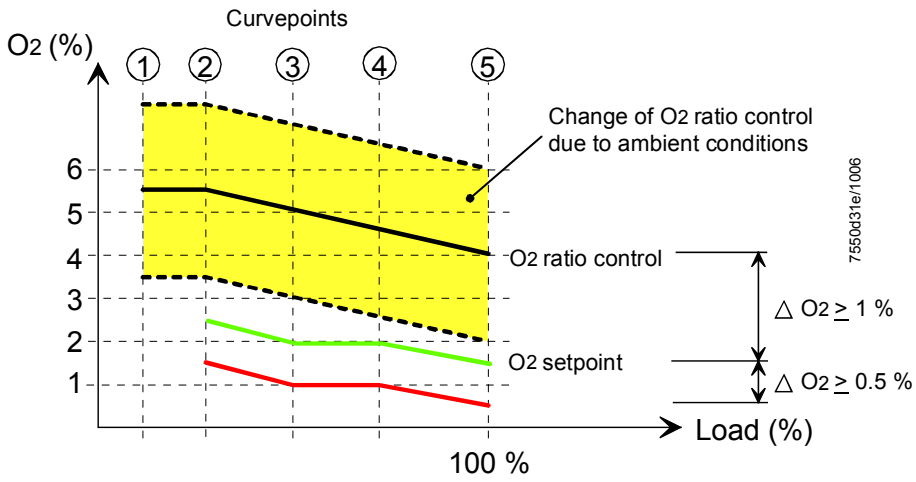

- **Parameterized load proportional to the fuel rate**
  The burner load parameterized at the curvepoints must be proportional to the actual burner load. To make the setting, determine the burner load with the help of the fuel counter.
- **Curvepoint 1**
  The first curvepoint should have an adequate distance below curvepoint ②. This means that the curve for reducing the air rate is also defined below point ②. As a guide value, point ① should lie at about half the load of point ②. Point ② should be smaller than or equal to the low-fire load.
  If, in the low-fire position, no further air reduction is possible (e.g. because the air damper has already fully closed), curvepoint 1 must be selected as the low-fire point. In that case, O2 trim control will only be performed up to curvepoint 2.

- **Linear progression of O2 value between the curvepoints**
  The O2 value between the curvepoints should progress in a linear fashion. To make checks, approach load positions between the curvepoints and check the O2 value. If the progression is not linear, additional curvepoints should be set and the O2 progression should be appropriately corrected.

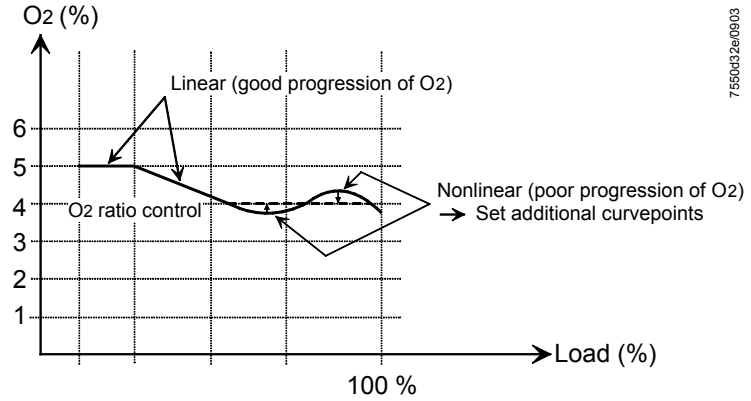

- **Checking the transfer range between damper and VSD**
  When using several air-influencing actuators (e.g. air damper or VSD), it should be made certain that the curves are as smooth as possible. Irregularities should be avoided.

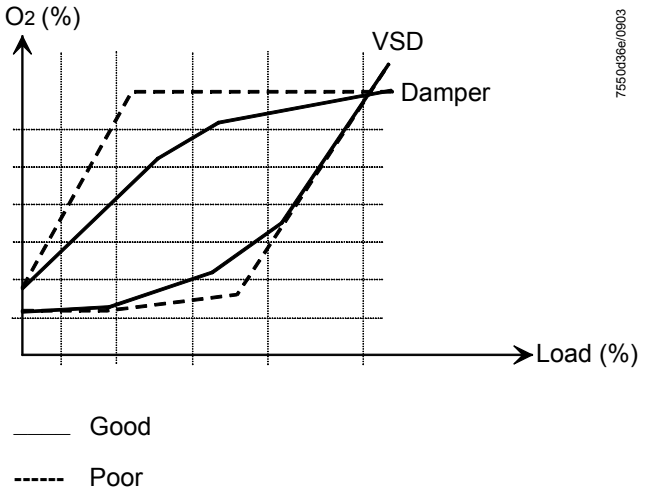

18.12.3 Setting the O2 controller

- **Selecting the O2 min. value**
  The O2 min. value should be set as low as possible to ensure a high level of availability.

  Above or at the O2 min. value, hazardous conditions must not permanently occur.

  Guide values: CO = 2,000 ppm, soot number 3.
  The values can vary, depending on the type of plant.

- **Adequate distance between O2 setpoint and O2 min. value**
  The distance should be a minimum of 1...1.5 % O2. If a smaller distance is used, the ratio curve must be set as accurately as possible, in accordance with subsection 18.12 Setting notes- «Setting O2 ratio control».

- **All O2 setpoints must be adjusted under the same environmental conditions**
  It is important to adjust the O2 setpoints at the same ambient temperatures. If, later, individual setpoints are changed, all setpoints of the curvepoints must be re-adjusted since environmental conditions will probably be different from those at the time the initial settings were made.

18.12.4 Other notes

When firing on oil and using a VSD, the oil pump must be driven separately.
If this is not observed, the fan speed has an impact on the amount of oil delivered. This can cause problems in connection with precontrol or O2 trim control.

18.13 Technical Data

LMV52... basic unit *Refer to chapter Technical Data!*

PLL52...

Mains voltage «X89-01»	AC 120 V –15 % / +10 %	AC 230 V -15 % / +10 %
Safety class	I with parts according to II as per DIN EN 60730-1	
Mains frequency	50 / 60 Hz ±6 %	
Power consumption	Ca. 4 VA	Ca. 4 VA
Degree of protection	IP54, housing closed	
Transformer AGG5.210		
- Primary side	AC 120 V	
- Secondary side	AC 12 V (3x)	
Transformer AGG5.220		
- Primary side	AC 230 V	
- Secondary side	AC 12 V (3x)	

Environmental conditions

Storage	DIN EN 60 721-3-1
Climatic conditions	class 1K3
Mechanical conditions	class 1M2
Temperature range	-20...+60 °C
Humidity	< 95 % r.h.
Transport	DIN EN 60 721-3-2
Climatic conditions	class 2K2
Mechanical conditions	class 2M2
Temperature range	-30...+70 °C
Humidity	< 95 % r.h.
Operation	DIN EN 60 721-3-3
Climatic conditions	class 3K5
Mechanical conditions	class 3M2
Temperature range	-20...+60 °C
Humidity	< 95 % r.h.

Condensation, formation of ice or ingress of water are not permitted!

18.14 Terminal ratings, cable lengths and cross-sectional areas

LMV52... basic unit Refer to chapter «Technical Data / LMV5... and AZL5...!»

PLL52...

Cable lengths / cross-sectional areas	
Electrical connection «X89»	Screw terminals up to max. 2.5 mm²
Cable lengths	≤10 m to QGO20...
Cross-sectional areas	Refer to description of QGO20... Twisted pairs

Analog inputs:	
Fresh air temperature detector	Pt1000 / LG-Ni1000
Flue gas temperature detector	Pt1000 / LG-Ni1000
QGO20...	Refer to Data Sheet N7842
Interface	Communication bus for LMV52...

19 Addendum 5: LMV52… with flue gas recirculation

19.1 Function principle of flue gas recirculation

Flue gas recirculation serves for reducing the Nox values in the flue gas. This is accomplished by recirculating a certain proportion of the flue gas to the combustion process so that the flame will slightly cool down. The amount of flue gas recirculated across the load range is determined via the fuel / air ratio curve of auxiliary actuator 3.

19.1.1 Setting the flue gas recirculation function

The way how and when auxiliary actuator 3 is driven to the fuel / air ratio curve is to be determined via parameter *FGR-Mode*.

deactivated The flue gas recirculation function is deactivated.
Auxiliary actuator 3 travels on its parameterized fuel / air ratio curve.

Time Auxiliary actuator 3 is maintained at the ignition position until an adjustable time is reached.

Temperature Auxiliary actuator 3 is maintained at the ignition position until an adjustable temperature is reached.

Parameter	*FGR-Mode*

The following parameters are used to set the delay time for auxiliary actuator 3 to be held at the ignition position after entering phase OPERATION1.

Parameter	*DelaytimeFGR Gas or DelaytimeFGR Oil*

The following parameters are used to set the temperature that must not be reached so that auxiliary actuator 3 will be held at the ignition position.

Parameter	*ThresholdFGR Gas or. Threshold FGR Oil*

The following parameter is used to select the type of sensor that shall be employed with flue gas recirculation.

Parameter	*FGR-sensor (PLL_Pt1000 / LC_Pt1000 / LC_Ni1000)*

Caution!
The correct configuration of the selected detector must be adjusted!

Example for LR_Pt1000:
Select the correct measurement range in the load controller menu, otherwise a fault message for loss of flame Pt1000 can appear!

19.2 Setting the fuel / air ratio

The fuel / air ratio curve of auxiliary actuator 3 is set the usual way:

Select the required curvepoint, then continue with **Enter**.

⇓

P	u	n	k	t	l	P	u	n	k	t				
		:		3	l	v	e	r	ä	n	d	e	r	n	?
H	a	n	d		l	l	ö	s	c	h	e	n	?		
					l										

The pointer position can vary here between *change* and *delete*. To edit the curvepoint, select *change* here.

- Continue with **Enter**

⇓

New: Select whether the actuators shall follow the adjustment (only during operation).

S	t	e	l	l	a	n	t	r	i	e	b	s	-		
p	o	s	i	t	i	o	n	e	n						
	M	i	t		A	n	f	a	h	r	e	n			
	O	h	n	e		A	n	f	a	h	r	e	n		

- Continue with **Enter**

⇓

P	u	n	k	t	l	L	e	i	s	t	:	2	3	.	5
		:		3	l	B	r	e	n	n	:	2	3	.	2
H	a	n	d		l	L	u	f	t		:	4	1	.	6
					l	H	i	l	f	3	#	3	3	.	3

If auxiliary actuator 3 still maintains the ignition position (recirculation duct CLOSED), it is marked with # .
The position value of auxiliary actuator 3 can be changed, but the actuator will not follow the readjustment for that period of time!
The changed value can also be stored.
If auxiliary actuator 3 is not marked with # when making the setting, it is already on the fuel / air ratio curve, in which case it also follows the readjustment of the position value.
If marked with # or in case of selection *without driving,* the curve position can be readjusted without having the actuator following the position value.

During the time the curve menu is used, the state of the flue gas recirculation function will not change. This means that if auxiliary actuator 3 is still at the *FGR closed* position (ignition position) when activating parameterization of the curves, it will maintain that position until parameterization is completed.

20 Dimensions

Dimensions in mm

PLL52...

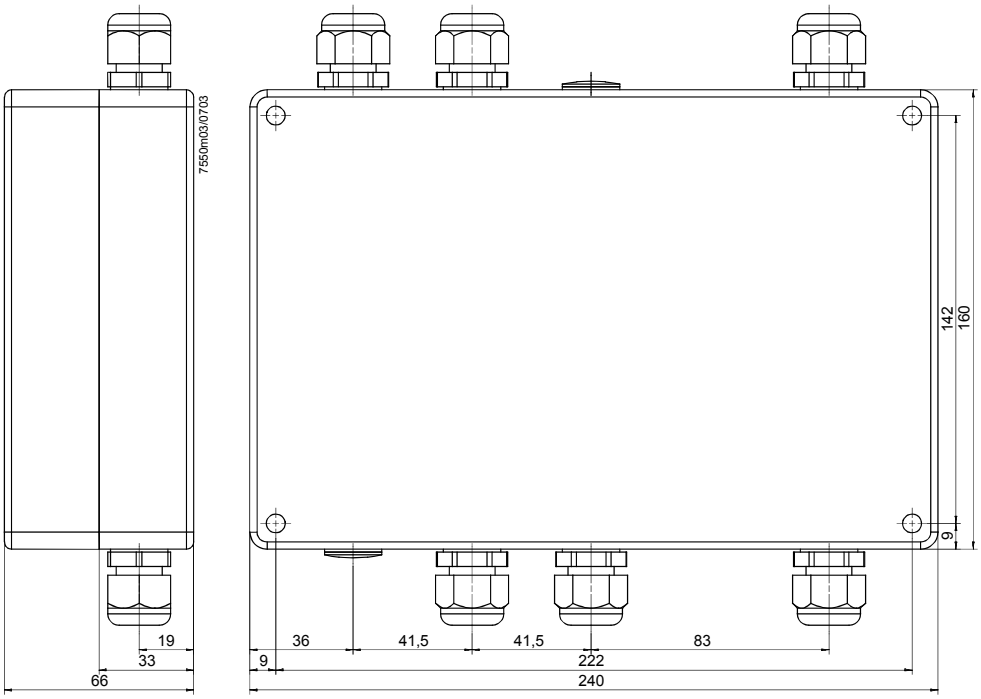

21 Revision history

The new release of the basic unit is identified by the series letter B in the type reference (LMV51.XXX**B**XXX).

Notes on compatibility

- When changing from A-series to B-series units, the parameter sets can be copied
- The added parameters are preset in a way that they correspond to the former functioning mode
- An update to a new unit, which is no longer in the state supplied, should not be made since it is only the parameters from the A-series that can be stored back
- The compatibility of the load controller must be set manually, with the sign reversed
- Due to the change to the external analog predefined load and to the analog load output (load controller V01.50), it may be necessary to make adaptations on the associated external controllers or BACS (building automation and control system)

21.1 Basic unit LMV51...

Software changes

The software of the basic card has been changed from V02.10 to V02.20.

The following changes have been made:

21.1.1 Program stop

When the unit reaches the «Program stop» position, the AZL5... will display «Programstop active».

21.1.2 Deactivating the alarm

The alarm relay can be deactivated via the menu of the AZL5…, which means that the actual lockout or start prevention will be maintained.
Deactivation remains active until the next lockout reset, system reset or startup occurs. Then, normal alarming will be resumed, that is, deactivation of the alarm applies to the current alarm.

21.1.3 Pressure switch-min in the oil program

Pressure switch-min can also be activated for the oil program only.

21.1.4 Shutoff-valve oil, switch-off time

In the case of oil-firing, the external shutoff valve closes on completion of the permissible afterburn time (end of phase 70).
The burner motor operates until phase 79 is reached.
Using the relevant parameter, it is now possible to choose between the present function (when using the magnetic clutch) and direct coupling of the oil pump.
In that case, the shutoff valve oil must be connected to the output for the oil pump (X6-02).
This output is not safety-related and is not used in the case of direct oil pump coupling.
The shutoff valve oil (X6-02) is always controlled when the fan runs, plus another 15 seconds.

21.1.5 «DWminOil» in program «Heavy oil with gas pilot»

Valuation of input «DWminOil» in program «Heavy oil with gas pilot» has been moved from phase 38 through phase 44.

21.1.6 «DWminOil» is only valued during the safety time after a delay time has elapsed

21.1.7 Air pressure switch test valve, inverted control

The signal can be inverted via the relevant parameter.
The output is only active when the fan operates.

21.1.8 External controller contact with «Manually on»

If the burner is in operation with «Manually on», the external controller on contact (X5-03 Pin1) acts as a shutoff device should overtemperatures occur.
With the exception of operating mode 1 (extLC), the controller contact can be deactivated if not used as a switch-off device.

21.1.9 Prepurge time after safety shutdown

After safety shutdown, the longer prepurge time «PrepurgeSafeGas/Oil» becomes active.

21.1.10 Changes to the supplied parameter set

The parameter set has been changed from V20.02.00 to V20.03.00.

The software of the basic card has been changed from V02.20 to V02.30.

The following changes have been introduced:

21.1.11 Driving to the low-fire positions

After ignition, first the positions of curvepoint P1 will be approached, independent of whether or not the minimum load has been set to a higher value. Once the positions of P1 are reached, the set minimum load will be approached.

21.2 Basic unit LMV52...

Introduction of serial software version V01.10.

21.3 Load controller card

Software changes of load controller

The software of the load controller has been changed from V01.40 to V01.50.

The following changes have been made:

21.3.1 Auxiliary sensor for cold start thermal shock protection

21.3.2 Straightforward changeover of operation to internal load controller

Using a potential-free contact at terminals X62.1 and X62.2, it is possible to switch from external load controllers to the internal load controller of the LMV51.100...

The following operating modes can be switched over:

Operating mode 4	→ 2	= Int LC X62	→ intLC
Operating mode 5	→ 2	= Ext LC X62	→ intLC
Operating mode 3	→ 2	= Int LC Bus	→ intLC
Operating mode 6	→ 2	= Ext LC Bus	→ intLC
Operating mode 1	→ 2	= Ext LC X5-03	→ intLC

21.3.3 With software version V01.50 or higher, Pt100 sensors in operating mode 6 are permitted

New load controller function for manipulated variable input and load output

Modulating burners

Manipulated variable input, modulating:

< 3 mA	open-circuit	
4 mA	or 2 V	low-fire (min. load)
20 mA	or 10 V	nominal load (max. load)

Burner shutdown at < 5 mA not used.

Load output, modulating:

< 3 mA	Open-circuit
4 mA	0 % load
xx mA	Low-fire (min. load)
xx mA	nominal load (max. load)
20 mA	100 % load

Shutting the burner down = no impact on signal.

Multistage burners

Manipulated variable input, multistage burner:

Stage 1:	5 mA	or 2.5 V
Stage 2:	10 mA	or 5 V
Stage 3:	15 mA	or 7.5 V

Switching thresholds at:

7.5 mA	and 12 mA	with 0.5 ma	hysteresis
3.75 V	and 6.25 V	with 0.25 V	hysteresis

Burner shutdown at < 5 mA not used.

< 3 mA: Open-circuit

Load output, multistage:

Burner off:	4 mA
Stage 1:	5 mA
Stage 2:	10 mA
Stage 3:	15 mA

The load controller's software has been changed from V01.50 to V01.60.

The following changes have been introduced:

21.3.4 Plausibility check at inputs X61 and X62

The plausibility check at inputs X61 and X62 is not made anymore. This means that fast value changes at these inputs will no longer result in safety shutdown.

21.4 Display and operating unit AZL5...

In connection with the new type reference of the basic unit (LMV51.XXX**C**XXX), the type reference of the AZL52.XX**A**XXX has also been changed.
Hence, the type references indicate the state of release and show the unit versions that work together.

21.4.1 Software changes to the flash memory

The software version of the flash memory has been changed from V02.20 to V02.50.

21.4.2 New designations of load controller inputs

For the load controller inputs 1 / 2 / 4 and the associated parameters, the following new names have been assigned:

Eing1/2/4Auswahl	→ Sensor selection
Eing1/4BerEnde	→ Measuring range PtNi
Eing2TempBerEnde	→ Measuring TempSensor
Eing2DruckBerEnde	→ Measuring PressSensor
Eing3Konfig_I/U	→ External input X62 U/I
Eing3MinSollwert	→ External setpoint min.
Eing3MaxSollwert	→ External setpoint max.

21.4.3 Fuel counter with reading in liters

A blank has been introduced between the value and the unit.

21.4.4 Preventing the transfer of parameter copies from new basic units to the backup memory of the AZL5...

Copying is not possible and a message will be delivered.

21.4.5 Parameter changes

The default settings of the following parameters have been changed:

Prepurging time oil:	15 s
Maximum time low-fire:	45 s
Postpurging position air (gas-firing):	15 °
Postpurging position air (oil-firing):	15 °
Postpurging position Aux/Fu (gas-firing):	25 °
Postpurging position Aux/Fu (oil-firing):	25 °
LC: Sd_Step1_On:	- 2 %

21.4.6 Name changes of load controller operating modes

extLR	→ ExtLR X5-03
intLR	→ IntLR
intLR via BACS	→ IntLR Bus
intLR BACS to	→ IntLR X62
extLRanalg	→ ExtLR X62
extLR via BACS	→ ExtLR Bus

21.4.7 New display text for actuator faults

The AZL5… indicates a new fault carrying code 0x0E (too short ramp time):

Text message
- Too short ramp time, air actuator
- Too short ramp time, gas actuator (oil)
- Too short ramp time, oil actuator
- Too short ramp time, auxiliary actuator 1
- Too short ramp time, auxiliary actuator 2 only LMV52...
- Too short ramp time, auxiliary actuator 3 only LMV52...

21.4.8 Changes to the LMV5… release

Basic unit

Software changed in the LMV51... basic unit from V02.30 up to V02.50
Software changed in the LMV52... basic unit from V01.30 up to V04.10

The product no. for the LMV5... will change as follows:

LMV51.0x0Bx	LMV51.0x0Cx
LMV51.1x0Bx	LMV51.1x0Cx
LMV51.200Ax	no modification
LMV21.2x0Ax	LMV52.2x0Bx

To operate the basic unit, it is necessary to have AZL5... software version 04.10 or higher. It is possible to update all AZL51... series B or higher and all AZL52... with this software. The passwords are now memorized encoded.

1. Introduction of a preset load for testing the safety limit thermostat.
2. Introduction of burner startup without prepurging.
3. Prepurge times 1 (t30) and 2 (t34) can be set on the OEM level.
4. Introduction of extraneous light test on the OEM level.
5. Introduction of repetition counter on the OEM level for loss of flame during operation.
6. Alarm in the event of start prevention in standby mode.
   In the case of start prevention with no request for heat, it has previously not been possible to set off an alarm. Now, via parameterization, an alarm can also be triggered in standby mode.
7. The inputs for oil are no longer checked when firing on gas. Likewise, the inputs for gas are no longer checked when firing on oil.
8. The maximum filling and evacuation time for gas valve proving are now limited by the maximum permissible safety time for startup. This affects in particular the burner control versions that use the American standard parameter set.
9. Introduction of maximum load limitation on the user level.
10. Hiding an adjustable load range aimed at reducing resonance phenomena in the burner – boiler – stack system.
11. Fuel actuator can be deactivated.
12. Flue gas recirculation (only with LMV52...).
    Actuator AUX3 can be employed for controlling the damper used for flue gas recirculation. To improve the burner's startup characteristics, only this actuator can be driven from its ignition position to the adjusted curve, either delayed or depending on the flue gas temperature.
13. Option: No prepurge for gas burners
    As per EN 676, you are allowed to skip the prepurge time if there is a valve proving system.
14. Changing the external light test for OEMs
    Now the OEM is able to skip the test of extraneous light in the start sequence
15. Repetition counter for loss of flame
16. Valve proof control: Maximum value for filling and evacuation times extended to "MaxSafetyTGas"
17. Maximum load adjustable at user level
18. Elimination of a certain operating range
19. Alarm with start prevention in standby
20. Check of oil / gas inputs when operating with the other type of fuel not applicable
21. Fuel actuator can be deactivated (only LMV52...)
22. Flue gas recirculation function corrected (only LMV52...)
23. Prepurge time (t30 + t34) at the OEM level
24. Test load for the safety temperature test adjustable
25. The curvepoints may now be adjusted without actually running the actuators to the adjusted positions
26. It is now tolerated if the heavy oil maximum pressure switch opens in sequence phases 38 and 44 for the pressure switch reaction time

Software changing in the LMV52... basic unit from V04.10 up to V04.20

1. Modified check of AZL5... software version at minimum V03.60
2. Modified conditioning open / closed release contact
3. Delaying of sensor test up to terms for test are reached
4. Modified plausibility test running time control stage
5. Eliminated timing problem when displayed start with VSD

Software changing in the LMV52... basic unit from V04.20 up to V04.50

6. Break of speed tests in operation via leave the operating position with „ReglerAus“
7. Implement the functionality “after ignition has been carried out, reaching the operating position via an other curvepoint as point 1”
8. Writing of diagnostics data no more in the ignition phase (is valid not yet for the VSD module)
9. Position assessment actuator and function converter in the phases 20...22 removed
10. Introduced timeout (time of ramp) for opening of release contact when speed not reached in standby and homerun
11. Valuation of external light in shutdown in phase 76 (2. part postburn time) displaced
12. Adjustment of load with „ExtR-X5“ and deactivated fuel actuator enabled
13. With activated fault in standby and cold O2 sensor → reaction in prevention of startup modified

Load controller card

Software changing of load controller from V01.60 up to V01.80

1. Analog inputs 2 and 3 (X61, X63) were extended by the ranges DC 0…10 V and 0…20 mA.
2. Analog output was extended by the range 0…20 mA.
3. Value presented at the analog output (e.g. load, temperatures, O2, etc.) can now be selected.
4. Introduction of measuring range up to 850 °C / 1562 °F for Pt100, Pt1000 and Ni1000 temperature input.
5. Input 2 (X61) and input 3 (X62) also with DC 0...10 V range
6. Implementation of a variable temperature range
7. The minimal step for burner output “Minimum actuator step” will also be active for external load controllers

VSD module

Software changing of VSD module from V01.30 up to V01.40

1. Behavior of release contact for the VSD:
   During shutdown, the release contact can be opened via parameterization. This enables the VSD module to use a DC break.
2. Quick shutdown of the burner when speed deviation is to high

O2 trim control

Software changing of O2 trim control from V02.50 up to V01.40

1. Possibility to change the lower O2 adaption point.
2. The time constant measured by O2 adaption during low-fire operation can be read on the user level.
3. Default value for O2 sensor changed to ”QGO20“

AZL52...

Software changing of AZL52... from V04.00 up to V04.20

1. Display of the extra temperature in the case of steam plant featuring temperature shock protection.
2. American units:
   The system is now capable of handling both American and metric units.
3. The default language of the factory setting will be English for the Siemens AZL52...
4. Modbus
   The fuel counters that cannot be reset will be replaced by the fuel counter that can be reset
   The following new parameters will be available:
   - Temperature of the additional temperature sensor for thermal shock protection
   - Flame signal (LMV51...) / flame signal channel A (LMV52...)
   - Flame signal channel B (LMV52...)

General

Software changing V04.10

1. Display of extra temperature at damp plant with temperature shock protection
2. If there are very flat or steep curves in one set of curves in the LMV5..., tolerance handling may generate error code 16. With the LMV52..., this problem was solved from software version 01.20. The LMV51... gets corrected with this new release
3. Supervision of µC supply voltage more tolerant
4. Error code, 1E diagnostics code 10, after standardizing the VSD:
   This error code was popping up if there were ramp times over 35 s. This is solved with this release
5. Change load controller mode 6 to 2:
   The load is now changeable
6. VSD 0 % with prepurging:
   The minimal adjustable value to 10% of the speed is changed
7. VSD correction with speed deviations modified
8. Store a parameter set with the PC tool in a new LMV5 system is now possible
9. Modbus setpoint W3 “write after reset” adjusted

AZL52...

Software changing of operating unit from V04.20 up to V04.30

1. Implementation of Cyrillic character set

Index

A
actual value acquisition of O2 190
actuator devices 188
actuator function 120
alarm output 49, 55, 201
Alarm output 43
auxiliary functions 226

B
basic configuration 137
basic diagram 25
brief description LMV... 25
burner control 37, 137, 189

C
cable lengths 192
cable lengths PLL52... 240
checking the control parameters 88
configuration of basic unit 200
configuration of current interface 206
configuration of fuel meter 206
configuration of O2 module 230
configuration of speed acquisition 205
configuration of the basic unit 200
configuration of the load controller 152
configuration of the system 231
configuration of VSD 204
connection diagram 38, 201
connection of load controller 79
control parameter 85
control parameters 153
controller parameters 236

D
digital e-bus interface 97
digital interface 103
dimensions 196

E
electrical connections and wiring 180
error message 98, 103
error messages 114, 115
extra functions 150

F
flame detector 21, 37
Flame detector 25
flame supervision 38
Flame supervision 25
flue gas temperature 226
flue gas temperature detector 240
flue gas temperature sensor226, 227, 228, 230
forced intermittent operation 55
fuel valve control program 34
Fuel valve control program 32, 35, 36
fuel valve program 30
function diagrams 85
functioning principle of O2 trim control 214
functions 109
functions diagrams 92

I
inputs / outputs 27
installation 180

L
legend to fuel trains 30
legend to the sequence diagrams67, 68
Legend VP leakage rate 53
line lengths 240
load limitation with O2 trim control 218

M
mounting 18, 75, 180, 190
mounting the LMV5... 17
multiboiler plants 103

N
new load controller function 246

O
O2 trim control190, 213, 214, 217, 222, 233, 235, 239
O2 trim controller 219

P
parameter 51
parameter changes 247
parameter copies 247
parameter PID 153
parameter setting notes 22
parameter settings 237
parameterization of the type of fuel 231
preset fuel parameter 232
pressure sensor 94, 101, 140
program stop function 57
program times 26

S
S / W changeover 135
safety loop SLT 189
self-setting of control parameters 86
self-test function 37
sensor input 96, 152, 228
sequence diagram 51, 57, 60, 67, 68
service 23, 180
setpoint 97, 154, 214
setpoint W1 / W2 81, 82, 83, 154
setpoints 95
shutdown function 135
SLT test 136
special function 122, 132
special functions 209
special functions during the program sequence 54
standard parameter set 153
standard parameterizations 116
stepper motor 26
supplied parameter set 245
system configuration 137

T
technical data 38, 191
Technical Data 240
temperature limiter function 98, 154
time parameters 51

W
writing parameters 109

Siemens Building Technologies HVAC Products GmbH
Berliner Ring 23
D-76437 Rastatt
Tel. 0049-7222-598-279
Fax 0049-7222-598-269
www.sbt.siemens.com

© 2008 Siemens Building Technologies HVAC Products GmbH
Subject to change!