SIEMENS

# 7719

# Infrared Flame Detectors QRI...

**Infrared flame detectors for use with Siemens burner controls, for the supervision of gas, oil and other flames that emit infrared light.**
**The QRI... are suited for burners of any capacity, either in continuous or intermittent operation.**

**The QRI... and this Data Sheet are intended for use by OEMs which integrate the flame detectors in their products.**

## Use, features

Key features of the QRI... flame detectors:
- Detector with infrared-sensitive flame detecting element
- Integrated flame signal amplifier
- Designed for frontal and lateral (90°) illumination
- Suited for use with burner controls type LMV5...
- Secured to the burner with flange and clamp

The spectral sensitivity of the QRI... is a maximum of about 2 µm covering infrared radiation emitted by gas, oil, and coal flames as well as other sources of infrared light.
Owing to electronic self-supervision of the flame signal, the QRI... can be used in connection with suitable burner controls designed for burners in continuous or intermittent operation.
The sensitivity of the QRI... is such that it must be fitted behind the burner's baffle plate.

## Warning notes

**To avoid injury to persons, damage to property or the environment, the following warning notes must be observed!**

**Do not open, interfere with or modify the flame detector!**

- All activities (mounting, installation and service work etc.) must be performed by qualified staff
- Before making any wiring changes in the connection area, completely isolate the plant from mains supply (all-polar disconnection). Ensure that the plant cannot be inadvertently switched on again and that it is indeed dead. If not observed, there is a risk of electric shock hazard
- Ensure protection against electric shock hazard by providing adequate protection for the burner control's connection terminals
- Each time work has been carried out (mounting, installation, service work, etc.), check to ensure that wiring is in an orderly state and that the correct terminals of the LMV5... are used and make the safety checks as described in «Commissioning notes»
- Make certain that none of the 3 connecting wires of the QRI... is connected to terminal X10-02/3 (mains voltage **L**)! Risk of damage to QRI... and LMV5...!
- Use an AC voltmeter (Ri = 10 MΩ) to ensure that there is no voltage across the reference line (blue wire = **N** of the LMV5...) and the burner housing (**PE**)
- Due to its mounting location behind the baffle plate, the flame detector has high signal sensitivity and, therefore, identifies small variations in infrared radiation as a flame. For this reason, make certain that so-called heat streaks after loss of flame (emitted for example by after-glowing combustion chamber lining) will not reach the detector as these would simulate a flame. Air turbulence or similar may modulate infrared radiation emitted by hot boiler or burner components in a way that a flame will be simulated. Likewise, moving parts in the detector's viewing range can cause infrared radiation from the boiler (or a viewing tube) to be modulated, thereby possibly generating sporadic detector signals. Strong burner or detector vibrations can also produce variations in radiation. For this reason, the burner or boiler manufacturer must make certain that such modulated radiation cannot reach the flame detector. For example, loose cables (moving up and down in the fan's airstream) are not permitted within the detector's viewing range
- Consider carefully the use of infrared flame supervision if several burners use the same combustion chamber. In general, this type of flame supervision is not suited for the specific supervision of individual burners
- Check to ensure that the burner will initiate lockout when – while the burner is running – the flame detector is removed from its fixing on the burner and – without moving it – is exposed to room lighting
- Fall or shock can adversely affect the safety functions. Such units must not be put into operation even if they do not exhibit any damage

## Mounting notes

- Ensure that the relevant national safety regulations are complied with
- Secure the flame detector to the burner with the clamp and flange provided. With the clamp's fixing screw loosened, the detector can be correctly adjusted toward the flame. This adjustment can be checked by watching the intensity of the flame signal on the AZL5... display and operating unit of the LMV5... burner control, or with the help of the measuring circuit (refer to «Detector signal measurement»)
- Ensure that the connection between the metal surface of the flange and the burner's earthed housing is electrically conductive

## Installation notes

- Locate the detector such that, if possible, only the flickering peripheral range of the flame will be detected. The view at hot boiler walls or other hot boiler or burner components must be restricted as much as possible. This can be attained by clearly confined viewing conditions behind narrow baffle plates. If this is not possible, a viewing tube should be used to restrict the viewing range to a smaller area of the flame. Length, diameter and alignment of the viewing tube must be determined through testing, depending on the size of burner and boiler

  The viewing range should be reduced to such an extent that:
  a) the minimum detector output signal required is attained over the burner's entire output range (for details, refer to the Basic Documentation of the LMV5... (P7550)
  b) after loss of flame, the valve's operating voltage is switched off by the burner control as required by the standards (refer to «Commissioning notes»).

## Electrical connection of the flame detectors

It is important to achieve practically disturbance- and loss-free signal transmission:

- Never run the detector cable together will other cables
  - Line capacitance reduces the magnitude of the flame signal
  - Use a separate cable
- Observe the permissible length of the detector cables (refer to «Technical data»)
- Always run the ignition cable separate while observing the greatest possible distance to other cables (min. 3 cm)
- Test the flame detector on all applications. When used in connection with the LMV5..., the test is to be made with a test routine (for details, refer to the Basic Documentation P7550)
- Make certain that the detector's cable does not get into contact with hot burner or boiler surfaces

## Commissioning notes

- When commissioning the plant or when doing maintenance work, make the following safety checks:

| | Safety check | Anticipated response |
|---|---|---|
| a) | Burner startup with flame detector darkened | Lockout at the end of «TSA» |
| b) | Burner startup with flame detector exposed to extraneous light (e.g. light from an incandescent lamp interrupted at about 20 Hz) | Lockout at the end of the prepurge time |
| c) | Simulation of flame failure during operation. For that purpose, darken the flame detector during operation and maintain this state | Lockout or restart, depending on the burner control's configuration |
| d) | Check the safety time in operation in the event of loss of flame; for that purpose, disconnect manually the fuel valves from power and check the time the burner control requires from this manual disconnection until the valves' power supply is turned off | Burner control disconnects power supply to the valves within the period of time allowed for the relevant plant |

- Make a loss-of-flame test with the AZL5... of the LMV5... burner control

## Standards and certificates

Only in connection with the burner control

Conformity to EEC directives

| | |
|---|---|
| - Electromagnetic compatibility EMC (immunity) | 2004/108EC |
| - Directive for gas appliances | 90/396EEC |
| - Low-voltage directive | 2006/95EC |

ISO 9001: 2000
Cert. 00739

ISO 14001: 2004
Cert. 38233

For use in the U.S. / Canada, the flame detectors carry the marks.

## Service notes

- To clean the detector's lens, use a soft, clean cloth (free from oil and solvents)

## Disposal notes

The flame detector contains electrical and electronic components and must not be disposed of together with domestic waste.
Local and currently valid legislation must be observed.

## Mechanical design

The QRI... has an impact-proof housing made of black plastic. The lens is fitted in a dust-tight position.
The QRI... can be secured to the burner within its adjusting range, using the clamp and the flange provided.
The 3-core connecting cable is ready connected to the QRI... and features cable strain relief.
Depending on the type of burner construction, there are flame detectors for frontal or lateral illumination available.

## Type summary

| Type reference | Illumination | Cable length «L» | Cable end | Accessories |
|---|---|---|---|---|
| QRI2A2.B180B | Frontal | 180 cm | Stripped | --- |
| QRI2B2.B180B | Lateral | 180 cm | Stripped | --- |
| QRI2B2.B180B1 | Lateral | 180 cm | Stripped | Flange and clamp |

When ordering, please give the complete type reference according to «Type summary».

## Accessories

**Flange**, with radius **4 241 8855 0**

**Flange**, straight **4 241 8898 0**

**Clamp** **4 199 8806 0**

**Mounting kit** **AGG2.110**
For frontal illumination, including heat insulator with ¾“ 14-NPSM thread

**Adapter**, protective sleeve Pg9 / ½“ 14-NPSM thread **AGG2.120**

## Technical data

| | | |
|---|---|---|
| General detector data | Operating voltage | |
| | - Operation | DC 14 V ±5 % |
| | - Test | DC 21 V ±5 % |
| | Signal voltage | DC 0...5 V |
| | Length of connecting cable | Max. 180 cm |
| | Degree of protection | IP54 |
| | Power consumption | < 0.5 W |
| | Length of auxiliary detector cable | Max. 100 m |
| | Safety class | II |
| | Vibrations to IEC 6068-2-6 | max. 1 g / 10...500 Hz |
| | Weight incl. cable 180 cm | approx. 0.175 kg |
| | Mounting position | optional |
| Environmental conditions | **Storage** | DIN EN 60 721-3-1 |
| | Climatic conditions | class 1K3 |
| | Mechanical conditions | class 1M2 |
| | Temperature range | -20...+60 °C |
| | Humidity | < 95 % r.h. |
| | **Transport** | DIN EN 60 721-3-2 |
| | Climatic conditions | class 2K2 |
| | Mechanical conditions | class 2M2 |
| | Temperature range | -20...+60 °C |
| | Humidity | < 95 % r.h. |
| | **Operation** | DIN EN 60721-3-3 |
| | Climatic conditions | class 3K5 |
| | Mechanical conditions | class 3M2 |
| | Temperature range | -20...+60 °C<br>short-time (max. 1 min) up to 75 °C |
| | Humidity | < 95 % r.h. |

⚠ **Condensation, formation of ice and ingress of water are not permitted!**

## Function

With this type of flame supervision, the changes in infrared radiation are used to generate the flame signal. The flame-detecting element is an infrared-sensitive photoresistor whose spectral sensitivity covers the range of approximately 1...3 µm. The detector does not respond to constant radiation or radiation with mains frequency harmonics (e.g. 50 Hz or multiples thereof). The suppression of these radiation frequencies is made electronically, directly dependent on the current mains frequency at which the relevant burner control (e.g. LMV5...) is operated. As a result, filtering takes place within a very narrow band, which means that the signal generated by the flame can almost completely be utilized since the frequency and the rate of change of infrared radiation constantly change. Hence, the detector's ability to capture the flame's radiation behind the burner's baffle plate is extremely high. As a result of the high level of sensitivity, constant or mains frequency-harmonic extraneous light sources remain undetected only if the detector itself is not moved. Due to its short-wave spectrum, the ignition spark will not be detected. The detector's analog output signal (0... approx. +5 V) is a measure of the changes of the flame's radiation intensity.

Maximum detector cable length

If the connecting cable length of 180 cm is not sufficient, the burner manufacturer can extend it up to a maximum of 100 m (also refer to «Installation notes»).

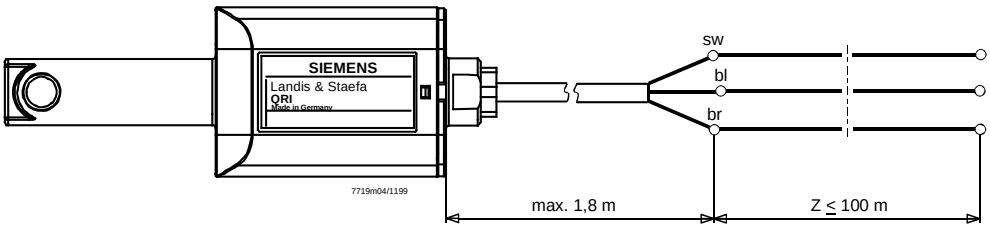


Legend

| | | | |
|---|---|---|---|
| bl | Blue wire = reference line | sw | Black wire = signal line |
| br | Brown wire = power line | Z | Extension cable |

## Spectral curves

Flames

Relative intensity of radiation

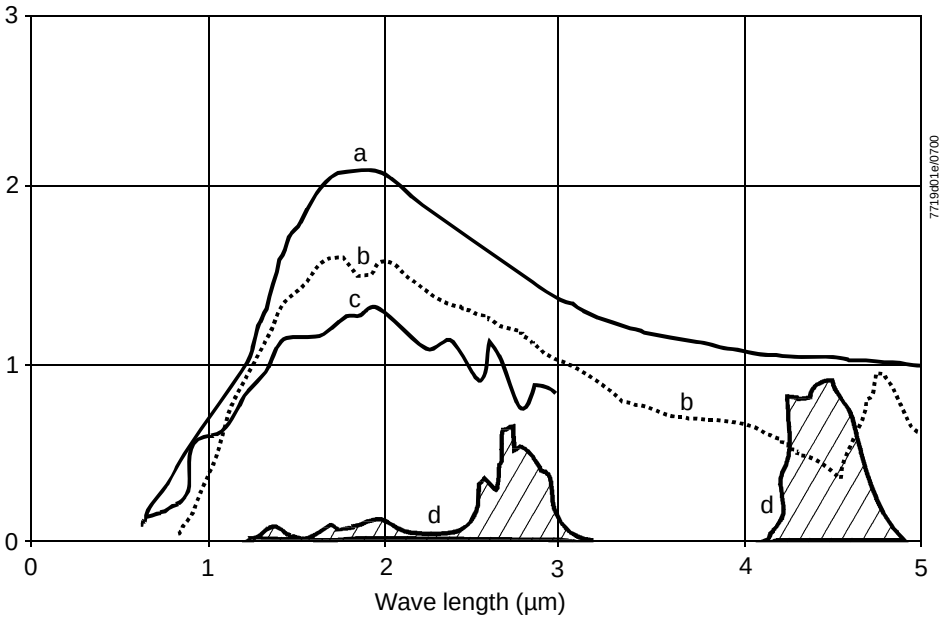


Spectral emission of radiation of luminous and nonluminous flames at 1,500 K (extract from VDI Report no. 423, 1981).

Legend

| | |
|---|---|
| a | Black body radiation |
| b | Pulverized coal flame |
| c | Oil flame |
| d | Gas flame |

Sensitivity of flame detector

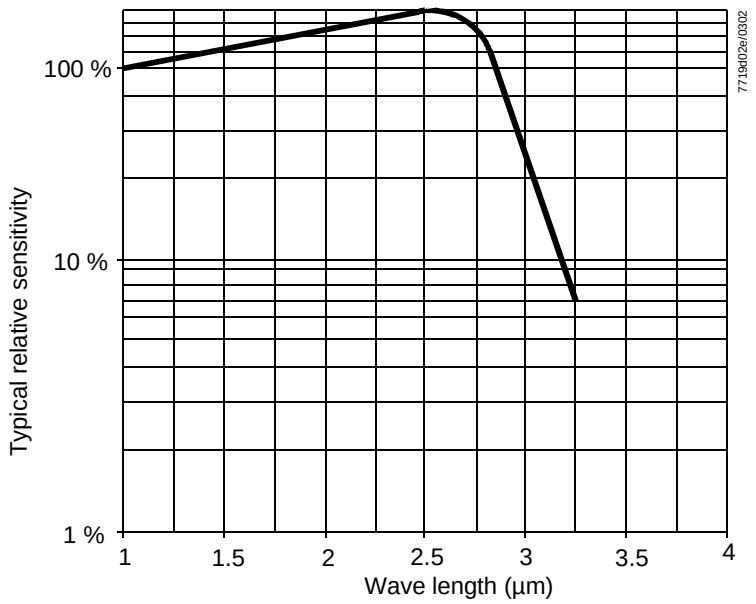

## Measuring circuit and connection examples

Measurement of the detector current

Refer to «Signal voltage» in «Technical data».

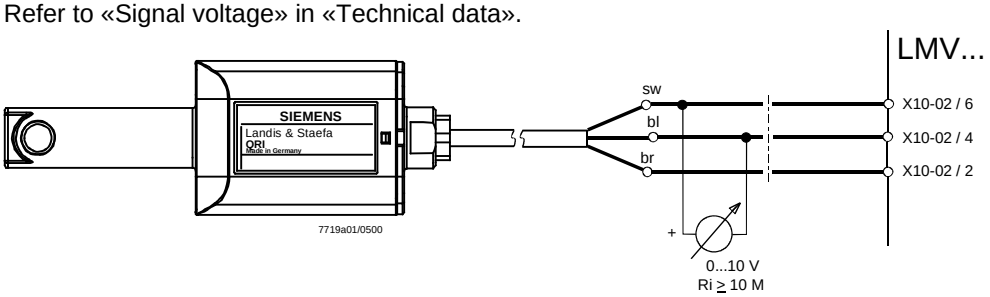


Measurement of the detector's signal with a Voltmeter is not normally required since the flame signal's intensity is shown on the AZL5... display and operating unit.

## Drawing of disposition

AGG2.110

Mounting kit is supplied completely assembled.

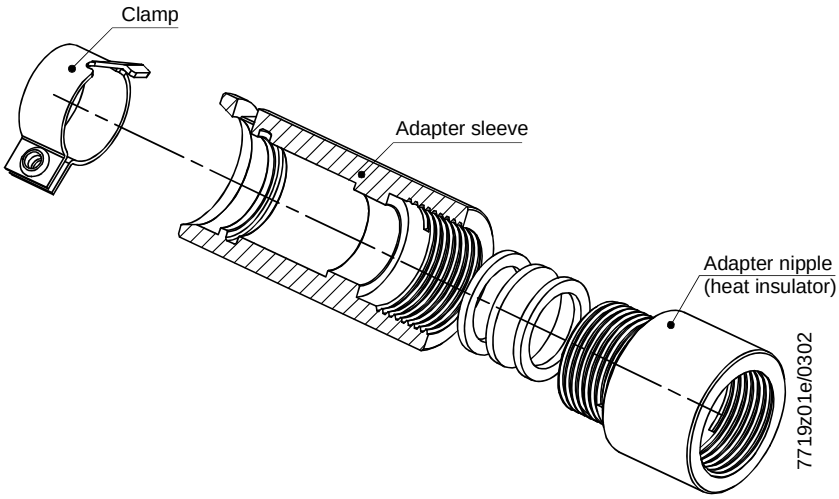

## Dimensions

Dimensions in mm

QRI2B...
for lateral illumination

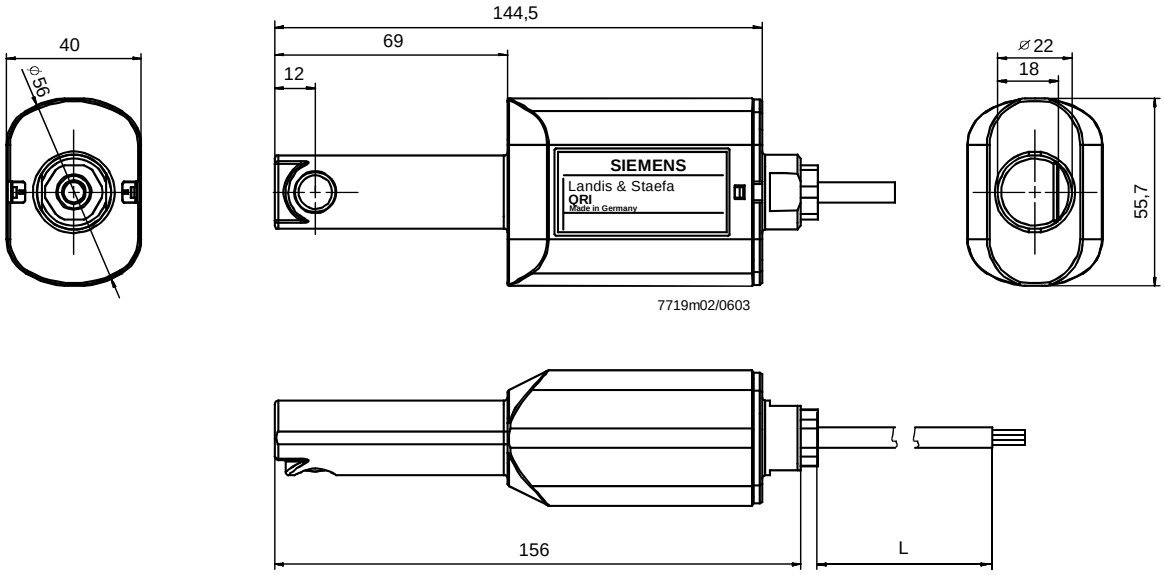


Legend L Available cable length (refer to «Type summary»)

QRI2A...
for frontal illumination

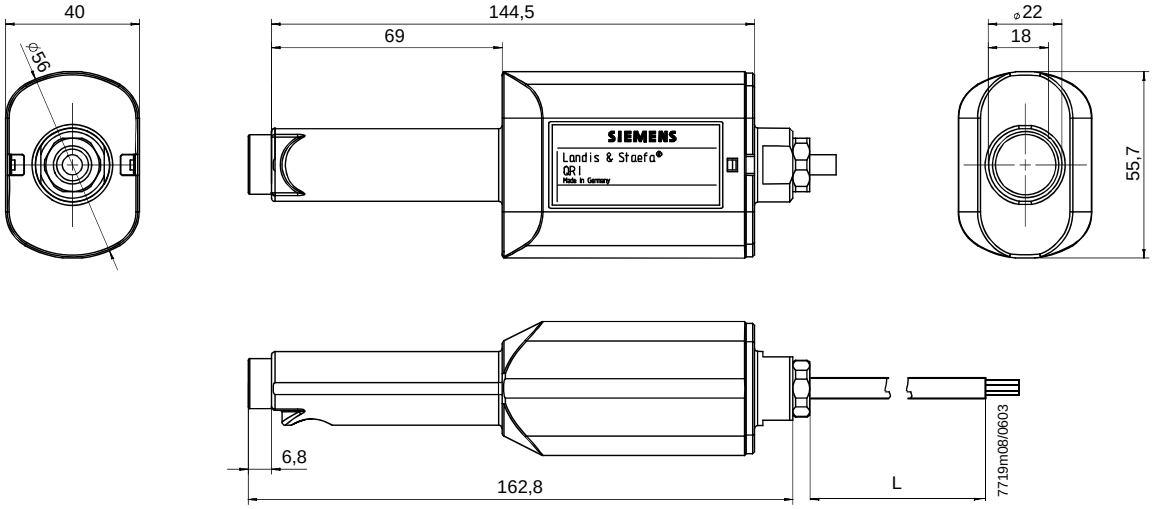

**Dimensions** (cont'd)

Connecting cable

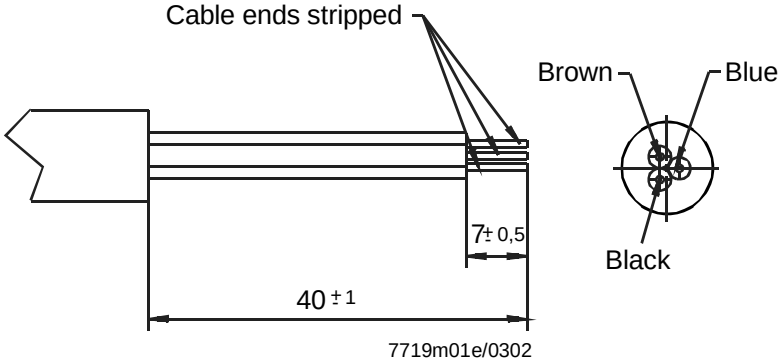


**For AGG2.110 mounting kit**

Adapter nipple and adapter sleeve

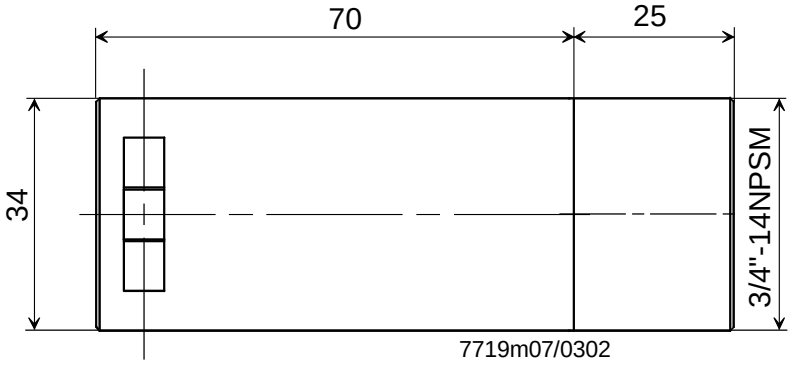


AGG2.120

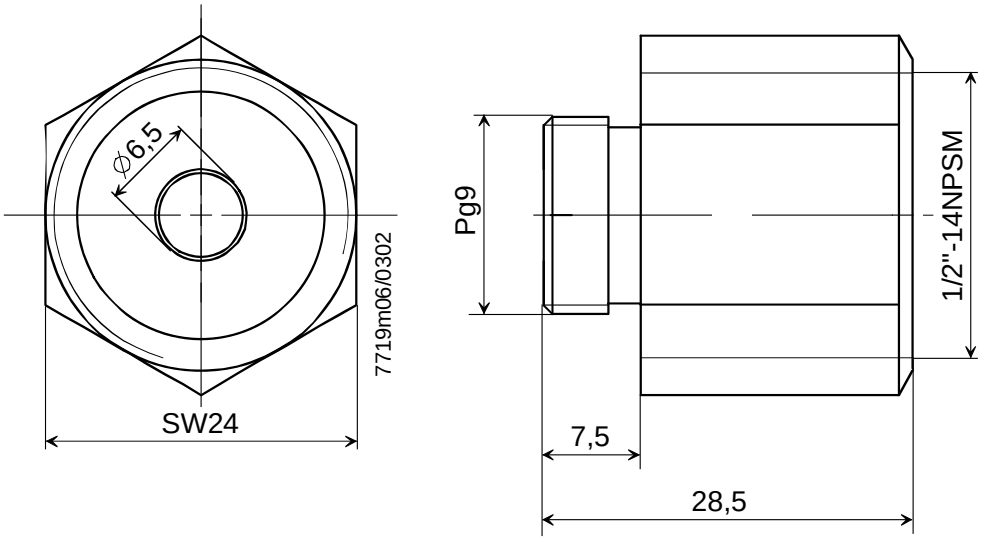

**Dimensions** (cont'd)

4 241 8898 0

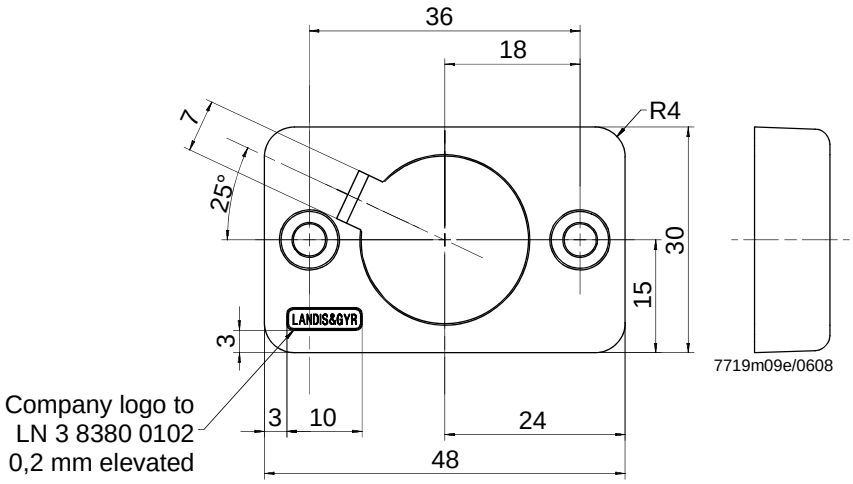


4 241 88550

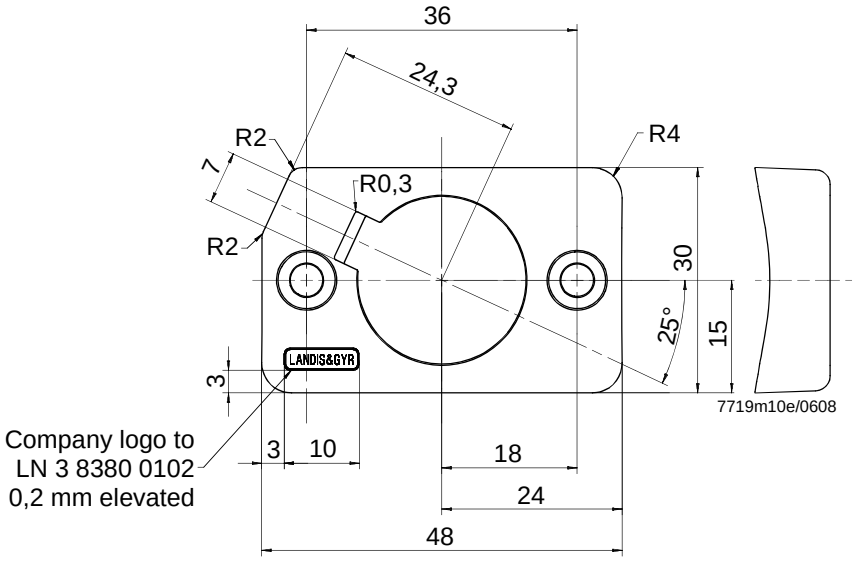


© 2008 Siemens Building Technologies HVAC Products GmbH
Subject to change!