SIEMENS

7814

Actuators

SQM45...
SQM48...

for air dampers and control valves of oil and gas burners

Electromotoric actuators

- **Torques:** – **SQM45...** **up to 3 Nm**
  – **SQM48...** **up to 20 Nm**
  – **SQM48.6...** **up to 35 Nm**
- **Running times: 1)** – **SQM45...** **10 ... 120 s**
  – **SQM48...** **30 ... 120 s**
  – **SQM48.6...** **60 ... 120 s**
  1) Depending on the type of basic unit (LMV5...)
- **Versions:** – **Choice of drive shafts (refer to «Type summary»)**

The SQM45... / SQM48... and this Data Sheet are intended for use by OEMs which integrate the actuators in their products!

Use

The actuators of the SQM45... / SQM48... range are used to drive gas dampers, air dampers, oil control valves and other ancillary equipment.
When used in connection with burner controls or electronic fuel / air ratio control, the associated controlling elements are controlled depending on burner output.

Warning notes

To avoid injury to persons, damage to property or the environment, the following warning notes should be observed!

Do not open, interfere with or modify the actuators!

- All activities (mounting, installation and service work, etc.) must be performed by qualified staff
- Before making any wiring changes in the connection area of the SQM4..., completely isolate the burner control from the mains supply (all-polar disconnection)
- Ensure protection against electric shock hazard by providing adequate protection for the connection terminals and by securing the housing cover
- Check to ensure that wiring is in an orderly state
- Fall or shock can adversely affect the safety functions. Such units must not be put into operation, even if they do not exhibit any damage

Mounting notes

- Ensure that the relevant national safety regulations are complied with
- The connection between actuator drive shaft and controlling element must be **rigid** with **no mechanical play**

Positive connection

Possible connection with drive shaft or hub:
- Groove with Woodruff key
- Drive shaft with flat edge and matching counterpiece

To avoid inadmissible loads on bearings caused by rigid hubs, it is recommended to use compensating clutches with no mechanical play (e.g. metal bellows clutches).

Cable and cable shielding

Only the specified cable may be used (refer to Basic Documentation P7550). The cable's shielding must be connected to the printed circuit board using the tab provided.

Ensure that the actuator's housing is connected to functional earth (FE) of the system. If necessary, remove isolating layers of paint from the fixing points on the burner's casing or run separate earth wires.
For detailed information, refer to «Installation Instructions for the LMV5… system» (J7550.1).

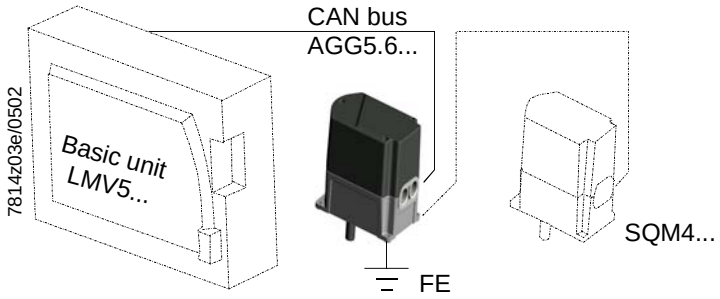

Working range of actuator

The working range is given on the type field and must be observed when mounting the actuator. To ensure the actuator is accurately located on the burner, a positioning pin of 6 mm diameter must be fitted on the mounting surface.

IP 54

To ensure **degree of protection IP 54,** suitable Pg11 glands must be fitted in the actuator's Pg11 openings.
The Pg glands used must feature cable strain relief.
To ensure degree of protection IP 54 during the actuator's entire service life, the bearing of the drive shaft must be located such that it will not be directly exposed to water or dust.

M15 glands

Mid-2005, Pg11 glands will be replaced by M16 glands!

Mounting example

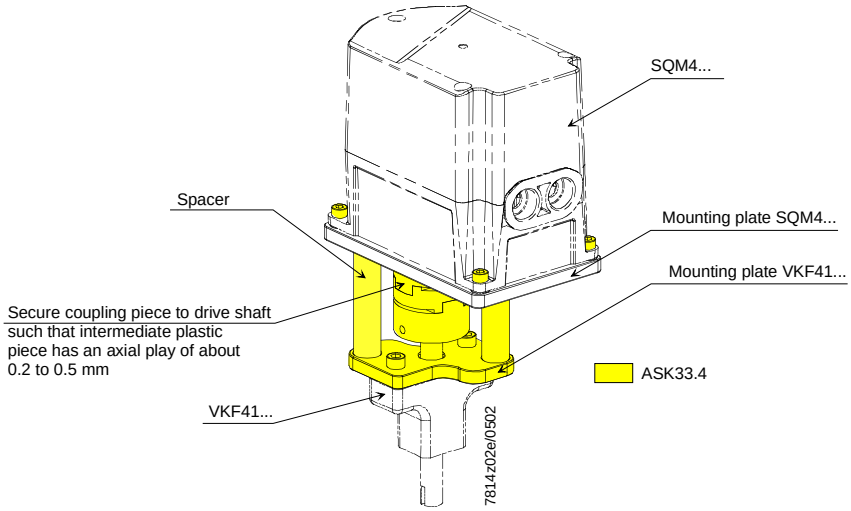

Installation notes

- Always run the high-voltage ignition cables separate from the unit and other cables while observing the greatest possible distance
- To ensure protection against electric shock hazard, make certain that the AC 230 V section of the SQM4... is strictly segregated from the functional low-voltage section
- The holding torque is reduced when the actuator's power supply is switched off

Housing cover

The housing cover may only be removed for short periods of time for wiring or when making the addressing. It must be made certain that dust or dirt will not get inside the actuator while such work is carried out.

ESD

The actuator contains a printed circuit board with ESD-sensitive components.
The top side of the board carries a cover which affords protection against direct contact. This protective cover must **not** be removed! The underside side of the board must not be touched.

Addressing

Addressing (assignment of functions) defines whether the SQM4... shall operate as a
- fuel actuator
- air damper actuator, or
- auxiliary actuator,

and is made with the display and operating unit AZL5... and the addressing button on the actuator, which is located under the housing cover (refer to Basic Documentation P7550).
The correct assignment of actuator functions can be checked with the help of flashing LEDs.

Cable length
Topology

For the maximum permissible cable length, refer to the Basic Documentation.
Cabling must be strictly serial (**no branching permitted!**).

Commissioning notes

- Prior to commissioning the plant, check to ensure that wiring is in an orderly state

Standards and certificates

Conformity to EEC directives

- Electromagnetic compatibility EMC (immunity)	89 / 336 EEC
- Directive for gas appliances	90 / 396 EEC
- Low-voltage directive	73 / 23 EEC

ISO 9001: 2000
Cert. 00739

ISO 14001: 1996
Cert. 38233

Service notes

- Each time an actuator has been replaced, check to ensure that wiring is in an orderly state

Replacement

When replacing an actuator, the following points must be checked and, if necessary, corrected:

- Addressing (assignment of functions)
- Bus termination
- Adjustment of the curvepoints of electronic fuel / air ratio control (e.g. with the LMV5...)

Disposal notes

The actuator contains electrical and electronic components and must not be disposed of together with domestic waste.
Local and currently valid legislation must be observed.

Mechanical design

Housing	The housing is made of die-cast aluminium. The cover is made of impact-proof and heat-resistant plastic. Color of cover: Black
Actuator	Stepper motor
Adjustment of switching points / position indication	In connection with the basic unit (e.g. LMV5...): Via the display and operating unit AZL5… (refer to Basic Documentation P7550).
Electrical connections	RAST3.5 terminals (supplied together with the AGG5.720 / AGG5.721).
Geartrain	SQM45...: Spur gears made of plastic with small backlash and permanent lubrication. SQM48...: Spur gears made of steel with small backlash and permanent lubrication.
Drive shaft	Made of black-finished steel, ready fitted to the front of the gear train (SQM48... uses a drive shaft made of hardened steel).
Mounting and fixing	The front of the gear train is used as the mounting surface. The actuator has 4 fixing holes and 1 elongated hole for the positioning pin. Alternatively, the actuator can be secured from the side of the controlling element with 3 self-tapping screws.

Type summary

Actuators SQM4...

Type reference	Drive shaft 1)	Running time (min.) for 90°	Nominal torque (max.)	Holding torque 2) (max.)	Radial bearing force (max.)
	no.	s	Nm	Nm	N
SQM45.291A9	1	10	3 3) 4)	1.5	190
SQM45.295A9	5	10	3 3) 4)	1.5	190
SQM48.497A9	7	30	20 3) 4)	20	420
SQM48.697A9	7	60	35 3) 4)	35	800

Legend

1) Refer to «Dimensions»
2) With operating voltage applied
3) Under nominal conditions 20 °C. Under extreme conditions (below –15 °C ambient temperature), the available torque is about 15 % lower
4) Under nominal conditions 20 °C. Under extreme conditions (above +50 °C ambient temperature), the torque is about 15 % lower

Ordering

When ordering, please give type references of actuator and accessories according to «Type summary».

In addition to the actuator, the following item is to be ordered **separately** and is also supplied as a separate item:

- Shielded cable
- Special terminals RAST3.5 as part of the AGG5.720 / AGG5.721 kit

Accessories

Accessories must be ordered as separate items.

Adapter for gas valves VKF41...C **ASK33.4**

CAN bus connecting cable **AGG5.630**
- Shielded 5-core cable, 500 m
- Refer to Basic Documentation on LMV5… (P7550)

CAN bus connecting cable **AGG5.631**
- Shielded 5-core cable, 100 m
- Refer to Basic Documentation on LMV5... (P7550)

Separable cable entry (single packing) **AGG5.810**

Separable cable entry (packed in sets of 50) **AGG5.812**

Specified connecting cables are mandatory!

Technical data

Actuator	Operating voltage	AC 2 x 12 V via bus cable from the basic unit or via a separate transformer
	Safety class	extra low-voltage with safe isolation from mains voltage
	Power consumption	
	- SQM45...	9...15 VA
	- SQM48...	26...34 VA
	On time	50 %, max. 3 min. continuously
	Angular adjustment	max. 90°
	Mounting position	optional
	Degree of protection	to EN 60 529, IP 54, provided adequate cable entries are used
	Cable entry	SQM45... / SQM48...: insertable threaded cable glands for 2 x Pg11 from mid-2005: 2 x M16 (replacement)
	Electrical connections	RAST3.5 terminals (for details, refer to the basic unit)
	Ferrules	matching the dia. of the stranded wire
	Direction of rotation	can be selected on the basic unit
	Torques and holding torques	refer to «Type summary»
	Reproducibility (typically in the show-room condition)	± 0.2° (when used with the basic unit LMV5...)
	Running times	refer to «Type summary» (can be selected on the basic unit)
	Load changes with continuous heavy loads	
	- SQM45... / SQM48.497	typically 500,000
	- SQM48.697	typically 300,000
	Weight	
	- SQM45...	approx. 1 kg
	- SQM48...	approx. 1.6 kg
	Direction of rotation (when facing the shaft)	
	- Standard	counterclockwise
	- Reverse	clockwise
Environment conditions	**Storage**	DIN EN 60721-3-1
	Climatic conditions	class 1K3
	Mechanical conditions	class 1M2
	Temperature range	-20...+60 °C
	Humidity	< 95 % r.h.
	Transport	DIN EN 60 721-3-2
	Climatic conditions	class 2K2
	Mechanical conditions	class 2M2
	Temperature range	-20...+70 °C
	Humidity	< 95 % r.h.
	Operation	DIN EN 60 721-3-3
	Climatic conditions	class 3K3
	Mechanical conditions	class 3M3
	Temperature range	-20...+60 °C
	Humidity	< 95 % r.h.

⚠ **Condensation, formation of ice and ingress of water are not permitted!**

Function

The SQM45... / SQM48... are of robust design and have a gear train with only small backlash.
Control and position feedback take place via a bus system (CAN).
The bus cable is also used for powering the actuators.
The actuators are driven by stepper motors and can be positioned with a resolution of 0.1°.
The characteristics and settings (running time, direction of rotation, limit positions) of the SQM4... are determined by the controlling basic unit (e.g. LMV5...; for details, refer to the Basic Documentation P7550 of the LMV5...).
The running times of the associated controlling elements are varied by the basic unit depending on the burner's control phase (e.g. startup phase: short running time; operation: long running time).

Terminating resistor

At the end of the serial bus cabling, a terminating resistor must be fitted.
For that purpose, a jumper must be set to BUS TERMINATION on the last actuator of the bus cable, which will activate the resistor.
On all the other actuators, that jumper must be set to the other position (deactivated).

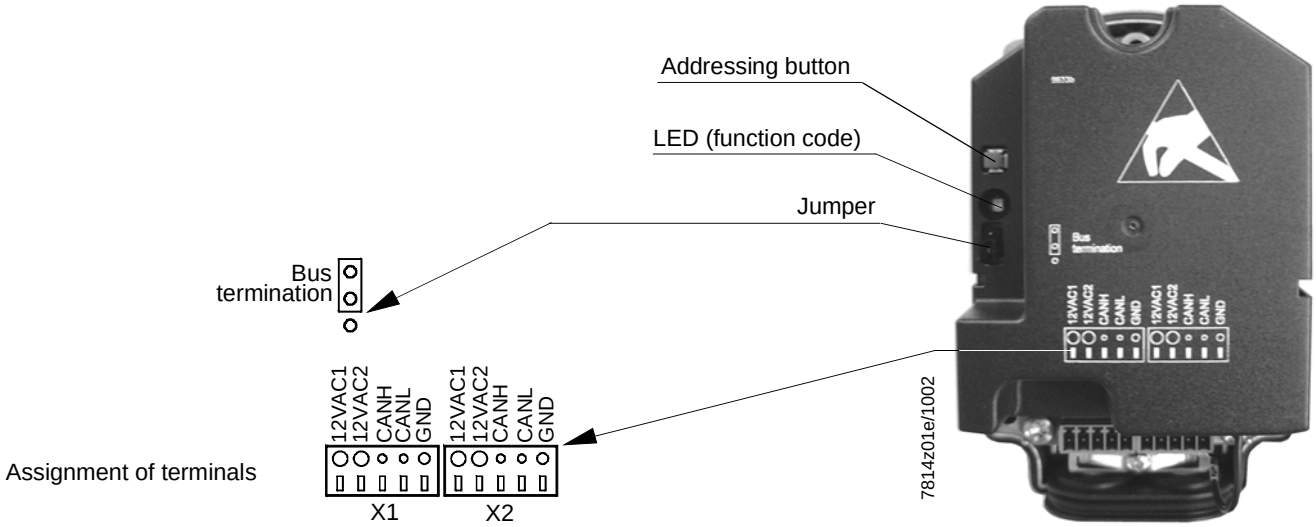

The 2 terminal blocks (X1 and X2) are identical.

Dimensions

Dimensions in mm

SQM45... / SQM48...

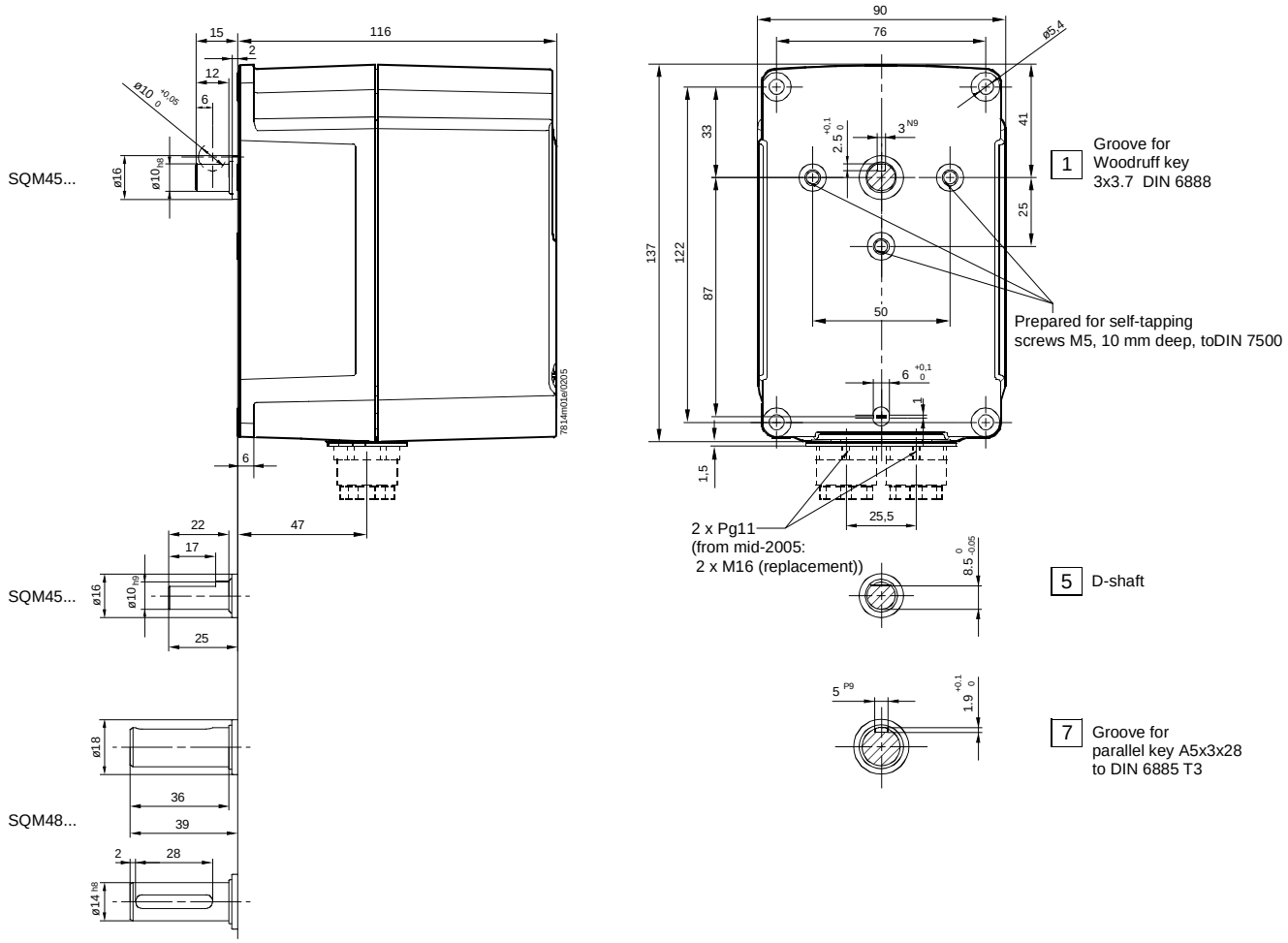

© 2005 Siemens Building Technologies Production GmbH
Subject to change!